WINTER
2026
b2b.cuagsports.com
Sportswear
Helmets
Shoes
Sports Glasses
Accessories
Framesets
Full range of bike gear & cross country skiing – from head to toe
More than 20'000 articles
Stylish and functional
Safe and always fitting
ONE CLICK TO B2B-SHOP
CUAG SPORTS AG | C/O HOHLE GASSE | ARTHERSTR. 60 | 6405 IMMENSEE | +41412595100 | INFO@CUAGSPORTS.COM | CUAGSPORTS-SHOP.COM
CU:AG SPORTS AG

INHALT | *CONTENU*

TIME FRAMESETS

SPORTFUL XC

SPORTFUL CYCLING

CASTELLI
CYCLING MEN

CASTELLI
CYCLING WOMEN

CASTELLI LEGACY

CUSTOM TEAM

NIMBL

TUNAP

KASK

SILCA

DEDA

KOO

- INFORMATIONEN
  INFORMATION
- VERKAUFS- UND LIEFERBEDINGUNGEN |
  CONDITIONS GÉNÉRALES D'AFFAIRES

Sehr geehrter CUAG-Sports-Partner

Wir freuen uns, Ihnen unseren Winterkatalog 2026 zu präsentieren. Alle älteren Preislisten und Angebote verlieren mit diesem Erscheinen ihre Gültigkeit. Die Preise sind kalkuliert zum aktuellen Eurokurs. Sollte der Kurs über 0,95 steigen, werden wir unseren bekannten und bewährten Währungsrechner einsetzen. Die empfohlenen Verkaufspreise sind Richtlinien und nicht zwingend verbindlich. Die im neuen Katalog aufgeführten Artikel stammen aus dem aktuellen Sortiment des jeweiligen Lieferanten. Druckfehler und Irrtümer vorbehalten.

Artikel ab Schweizer Lager (Ampel grün im B2B Webshop) sind ab sofort lieferbar. Artikel ab Fremdlager (Ampel gelb im B2B Webshop) versenden wir innert 7 - 10 Arbeitstagen betrifft ausschliesslich Textil; Hartwaren innert 4 - 6-Wochen ab Fremdlager. Für das Retournieren der aus dem Fremdlager bestellten Artikel werden 10 % des Einkaufswertes als Bearbeitungsgebühren berechnet. Rücksendungen werden ausschliesslichen in der Originalverpackung und mit sämtlichen Hersteller-Etiketten angenommen. Ansonsten werden 10 % des Einkaufpreises als Bearbeitungs- und Instandhaltungsgebühren verrechnet.

Versandkosten
Versandkosten: CHF 12,40; **ab CHF 300.– Bestellwert frei Haus**.
Expressversand: CHF 12,40 + CHF 25.– zusätzlich.
Lieferfrist: DPD 24 Std.-Service; bei Bestelleingang bis 14.00 Uhr Lieferung am nächsten Werktag.
Zahlungsbedingungen: 20 Tage netto. 2 % Skonto bei Voraus-, Barzahlung oder Lastschriftverfahren.

Ansprechpartner
Für Fragen zu unseren Artikeln stehen Ihnen unsere Spezialisten gerne persönlich zur Verfügung. Sie helfen uns eine schnelle Lieferabwicklung zu erreichen, indem Sie immer mit Artikelnummer und wenn möglich im Webshop oder per E-Mail bestellen.

Öffnungszeiten
Wir sind **montags bis freitags von 8.30 bis 12.00 Uhr** und von **13.30 bis 18.00 Uhr** für Sie da.

Cher partenaire CUAG Sports

Nous nous réjouissons de vous présenter notre Catalogue d'hiver 2026. Avec cette nouvelle édition, toutes les anciennes offres et listes de prix perdent leur validité. Les prix sont calculés avec le cours actuel de l'euro. Si le taux de change augmente sur 0.95, nous utiliserons notre convertisseur de devises connu et éprouvé. Les prix de vente recommandés sont indicatifs, sans obligations d'application. Les articles présentés dans le nouveau catalogue proviennent de l'assortiment actuel des fournisseurs respectifs (sous réserve de fautes d'impression et d'erreurs).

Les articles provenant de l'entrepôt suisse (feu vert dans la boutique en ligne B2B) sont disponibles immédiatement. Les articles provenant d'entrepôts externes (feu orange dans la boutique en ligne B2B) sont expédiés dans un délai de 7 à 10 jours ouvrables pour les textiles uniquement ; les articles non textiles sont expédiés dans un délai de 4 à 6 semaines depuis l'entrepôt externe. Pour le retour des articles commandés du stock externe, 10 % de la valeur d'achat sera facturé comme frais de traitement. Les retours ne seront acceptés que dans l'emballage d'origine et avec toutes les étiquettes du fabricant. Sinon, 10 % du prix d'achat seront facturés comme frais de manutention et de maintenance.

Coûts de livraison
Frais de port: CHF 12.40, ***franco domicile pour une commande à partir de CHF 300.–.***
Livraison express: CHF 12.40 + CHF 25.– supplémentaire.
Délai de livraison: service DPD 24 heures, pour les commandes effectuées jusqu'à 14h00 livraison le jour ouvrable suivant.
Conditions de paiement: 20 jours net, rabais de 2 % pour les paiements effectués en avance et en liquide, ainsi que par système de recouvrement direct.

À votre disposition
Nos spécialistes restent à votre disposition pour toutes questions concernant nos articles. Vous nous permettrez d'offrir un service de livraison rapide en indiquant toujours le numéro d'article et en effectuant si possible, commander dans la boutique en ligne ou par e-mail.

Horaire d'ouverture
Nous sommes à votre disposition de ***lundi à vendredi de 08h30 à 12h00*** *et de* ***13h30 à 18h00.***

CUAG Sports AG
C/O Hohle Gasse | Artherstr. 60
6405 Immensee

Phone:
+41 41 259 51 00

cuagsports.com
b2b.cuagsports.com
info@cuagsports.com

MwSt. | T.V.A. CHE-112.337.949
Bank | Banque Schwyzer Kantonalbank, 6431 Schwyz
IBAN CH12 0077 7005 3581 7106 3

TIME

No One Stops Time

GESCHWINDIGKEIT – GEBOREN, UM SCHNELL ZU SEIN
Im Laufe unserer Geschichte haben wir mit den besten Radfahrern und Teams der Welt zusammengearbeitet, um Fahrräder und Produkte zu schaffen, die unerreichbar sind. Unsere Erfolge werden bewundert, und wir waren Teil unzähliger ikonischer Momente im Radsport über vier Jahrzehnte hinweg. Wir verfeinern jedes Detail unseres Designs und Herstellungsprozesses, um immer schnellere Fahrräder zu bauen. Wir verstehen, dass ein schnelles Fahrrad das Ergebnis vieler Faktoren ist – Gewicht, Stärke, Stabilität, Komfort – und wir behandeln jeden dieser Faktoren gleich, um das optimale Fahrerlebnis zu bieten.

VITESSE – NÉ POUR ÊTRE RAPIDE
Tout au long de notre histoire, nous avons collaboré avec les meilleurs cyclistes et équipes du monde pour créer des vélos et des produits inégalables. Notre palmarès est respecté, et nous avons fait partie d'innombrables moments emblématiques du cyclisme pendant plus de quatre décennies. Nous affinons chaque détail de notre processus de conception et de fabrication afin de construire des vélos de plus en plus rapides. Nous comprenons qu'un vélo rapide résulte de multiples facteurs – poids, solidité, stabilité, confort – et nous traitons chaque facteur avec la même importance pour offrir une expérience de conduite optimale.

STIL – MODE VERGEHT, STIL IST EWIG
Radfahren ist gleichbedeutend mit Stil. Vom angriffslustigen Panache eines Jacques Anquetil oder Julian Alaphilippe bis zu den Stunden, die man damit verbringt, das perfekte Setup zu verfeinern. Wir durchdringen unsere Fahrräder mit Technologie und Stil – Form und Funktion arbeiten in perfekter Harmonie. Unsere Fahrräder sind zeitlos im Stil, und wie der große Yves Saint Laurent sagte: „Mode vergeht, Stil ist ewig."

STYLE – LA MODE PASSE, LE STYLE EST ÉTERNEL
Le cyclisme est synonyme de style. De la panache offensive de Jacques Anquetil ou Julian Alaphilippe aux heures passées à perfectionner votre configuration idéale. Nous infusons nos vélos de technologie et de style – la forme et la fonction travaillant en parfaite harmonie. Nos vélos sont intemporels en termes de style, et comme l'a dit le grand Yves Saint Laurent : « Les modes passent, le style est éternel. »

EXZELLENZ – STÄNDIGE SUCHE NACH PERFEKTION
Die Suche nach Exzellenz ist der Grund, warum wir vor über 20 Jahren in geflochtenen Carbon und Resin Transfer Molding investiert haben. Deshalb geben wir uns nicht mit billigeren Alternativen zufrieden. Wir machen keine Abstriche und lagern keine Produktion aus; alles wird in unserem europäischen Werk nach unseren strengen Standards hergestellt. Wir sind rastlos, immer darauf bedacht, unsere Prozesse zu verbessern, unser Produkt zu verfeinern und Dinge besser zu machen. Unser Streben nach Exzellenz in allen Bereichen unseres Unternehmens ist die Grundlage für die Qualität, die wir liefern.

EXCELLENCE – TOUJOURS À LA RECHERCHE DE LA PERFECTION
La quête de l'excellence est la raison pour laquelle nous avons investi dans le carbone tressé et le moulage par transfert de résine il y a plus de 20 ans. C'est aussi pourquoi nous ne nous contentons pas d'alternatives moins chères. Nous ne faisons pas de compromis et n'externalisons pas la production ; tout est fabriqué dans notre usine européenne selon nos normes strictes. Nous sommes inlassables, toujours à la recherche d'améliorations dans nos processus, de perfectionnements de nos produits et de nouvelles manières de faire mieux. Notre exigence d'excellence dans tous les domaines de notre activité est le fondement de la qualité que nous produisons.

KREATIVITÄT – DENKEN AUF DER NÄCHSTEN EBENE
Wir sind eine kreative, leidenschaftliche und engagierte Gruppe von Designern und Ingenieuren. Radfahren und der Bau von Fahrrädern bestimmen unser Leben, und wir suchen ständig nach neuen, innovativen und kreativen Wegen, um den Sport, den wir lieben, zu verbessern. Der Einsatz einzigartiger Technologien und die Erfindung völlig neuer Technologien beweisen, dass unsere Kreativität uns auf das nächste Level bringt.

CRÉATIVITÉ – PENSER AU NIVEAU SUPÉRIEUR
Nous sommes un groupe créatif, passionné et dévoué de designers et d'ingénieurs. Le cyclisme et la fabrication de vélos nous obsèdent, et nous cherchons constamment des moyens nouveaux, innovants et créatifs pour améliorer le sport que nous aimons. L'utilisation de technologies uniques et l'invention de nouvelles prouvent que notre ingéniosité nous pousse à atteindre le niveau supérieur.

FOKUS – NICHTS AUSSER CARBON
Früh haben wir entschieden, uns ausschließlich auf Carbonfasern zu konzentrieren. Diese wichtige Entscheidung hat dazu geführt, dass unser Wissen, unsere Erfahrung und unsere Fähigkeiten im Umgang mit diesem erstaunlichen Material über Jahrzehnte hinweg unübertroffen sind.

FOCALISATION – RIEN QUE LE CARBONE
Nous avons pris très tôt la décision de nous concentrer uniquement sur la fibre de carbone. Cette décision clé signifie que, au fil des décennies, notre connaissance, notre expérience et notre maîtrise de ce matériau exceptionnel sont sans égal.

UNABHÄNGIGKEIT – NIEMAND STOPPT DIE ZEIT
TIME wurde im Geiste von Roland Cattin, unserem Gründer, geschaffen. Wir sind unabhängig und stolz auf unser Erbe. Unser Engagement für Qualität, Innovation und Exzellenz prägt unsere Arbeitsweise. Das Wichtigste für uns ist die Qualität unserer Fahrräder, und nichts wird uns davon abhalten.

INDÉPENDANCE – PERSONNE N'ARRÊTE LE TEMPS
TIME a été créé dans l'esprit de Roland Cattin, notre fondateur. Nous sommes farouchement indépendants et fiers de notre héritage. Notre engagement envers la qualité, l'innovation et l'excellence guide notre façon de travailler. Ce qui compte le plus pour nous, c'est la qualité de nos vélos, et rien ne nous détournera de cet objectif.

TIME

Art.- Nr. | Réf.	Bezeichnung | Description

FRAMES

SCYLON DISC

75332225 S01*	**NUDE** XXS, XS, S, M, L, XL

75332225 S02*	**PEARL** XXS, XS, S, M, L, XL

75332225 S03*	**BRILLIANT RED** XXS, XS, S, M, L, XL

75332225 S04*	**BRILLIANT PURPLE** XXS, XS, S, M, L, XL

75332225 RTP*	**READY TO PAINT** XXS, XS, S, M, L, XL

* auf Bestellung 4 - 6 Wochen | *sur commande 4 - 6 semaines*

Art.- Nr. | Réf. Bezeichnung | Description

Scylon Generation2
Entwickelt für Aerodynamik, Geschwindigkeit und präzises Handling. Mit fortschrittlicher Kohlefasertechnologie, vollständiger Kabelintegration und hocheffizienter Kraftübertragung.

Scylon bietet maximale Leistung bei jeder Fahrt. Dominieren Sie Anstiege, Sprints und Ausreißversuche.

Im Leistungsumfang enthalten
- FSA Steuersatz/SRS Topcap für halb- und vollintegrierte Cockpits
- Alu-Flaschenschrauben
- Scylon Aero-Sattelstütze
- Steckachsen vorne und hinten
- Semi-Integrierte Sattelstützenklemme
- Umwerfer und Schaltwerkhalter

Scylon génération 2
Conçu pour l'aérodynamisme, la vitesse et la précision de conduite. Doté d'une technologie avancée en fibre de carbone, d'une intégration complète des câbles et d'un transfert de puissance ultra-efficace.

Le Scylon offre des performances maximales à chaque sortie. Dominez les montées, les sprints et les échappées.

Inclus dans les spécifications
- *FSA Headset/SRS Topcap pour cockpits semi-intégrés et intégrés*
- *Boulons de bouteille en alliage*
- *Tige de selle Scylon Aero*
- *Axes Thru avant et arrière*
- *Collier de tige de selle semi-intégré*
- *Crochets de dérailleur avant et arrière*

SCYLON DISC FRAME SPECIFICATIONS	
FRAME MATERIAL Gen 2 BCS M46J / T800 Carbon Fiber Layup	THRU AXLES 12x120x1.5mm pitch F, 12x159x1.5mm pitch R
SIZES XXS, XS, SM, MD, LG, XL	SEATPOST DIAMETER Proprietary SCYLON Aero Carbon, -20/+10mm SB
FORK STEERER TUBE Kevlar Enhanced BCS Carbon Fiber - Tapered 1-1/8" to 1-½"	SEATPOST CLAMP Semi-Integrated TIME Alloy
HEADSET BEARINGS FSA Headset/SRS Topcap for Semi & Fully-Integrated Cockpits	SHIFTING Compatible with all Electronic Shifting Systems
WHEEL SIZE 700c	FRONT DERAILLEUR Standard Mount
MAXIMUM TIRE WIDTH 700x32 (not all tire/rim combinations fit with adequate clearance - check for appropriate fit)	REAR DERAILLEUR Standard Mount
BOTTOM BRACKET PF 386 EVO	BRAKE TYPE Front and Rear Flat Mount Disc
DISC HUB STANDARD 12x100mm F, 12x142mm R	ROTOR SIZE 140/160mm with Adapter

	XXS	XS	S	M	L	XL
1 - SEAT TUBE VIRTUAL	538	556	574	589	612	630
2 - SEAT TUBE ACTUAL	470	485	505	525	545	565
3 - TOP TUBE VIRTUAL	529	540	549	560	574	586
4 - SEAT TUBE ANGLE	73	73	73	73	73	73
5 - HEAD TUBE ANGLE	71.5	71.5	71.5	72	73	73
6 - HEAD TUBE	120	138	154	167	185	203
7 - FORK OFFSET	50	50	50	50	43	43
8 - AXLE TO CROWN	370	370	370	370	370	370
9 - TRAIL (28 TIRE)	62	62	62	59	60	60
10 - FRONT CENTER	579	590	595	604	600	609
11 - CHAINSTAY	410	410	410	410	410	410
12 - BB DROP	67	67	67	67	67	67
13 - WHEELBASE	980	991	996	1005	1001	1011
14 - STACK	515	532	549	567	584	601
15 - REACH	372	377	382	389	392	397

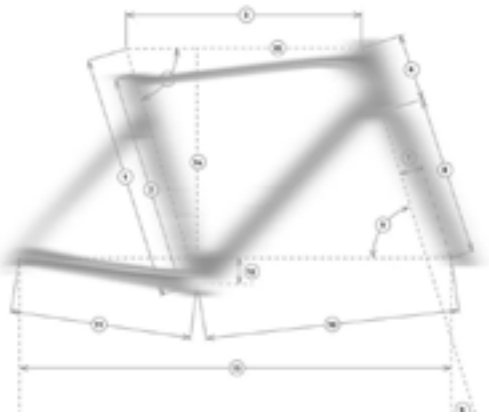

CUAG SPORTS AG | C/O HOHLE GASSE | ARTHERSTR. 60 | 6405 IMMENSEE | +41412595100 | INFO@CUAGSPORTS.COM | CUAGSPORTS-SHOP.COM

ALPE D'HUEZ DISC

Art.- Nr. | Réf.	Bezeichnung | Description
75292225 V31	**GLOSS CARBON** XS, S, M, L, XL
75292225 V35	**BRILLIANT RED** XS, S, M, L, XL
75292225 V36*	**BRILLIANT BLUE** XS, S, M, L, XL
75292225 V38*	**BRILLIANT PINK** XS, S, M, L, XL
75292225 V47*	**BRILLIANT SILVER** XS, S, M, L, XL
75292225 RTP*	**READY TO PAINT** XS, S, M, L, XL

* auf Bestellung 4 - 6 Wochen | *sur commande 4 - 6 semaines*

Art.- Nr. | Réf. Bezeichnung | Description

Die Entwicklung von Alpe d'Huez
Alpe d'Huez ist mehr als nur ein Anstieg bei der Tour de France. Hubschrauber, Polizeieskorten, blauer Rauch, kreischende Gesichtsbemalte und eine Menge von 300.000 Radsportfans garantieren, dass jeder Besuch dieses legendären Gipfels für immer mit Ruhm gekrönt wird. Es ist diese unverwechselbare Verbindung von Geschichte, Spektakel, enormer Anstrengung, Sportlichkeit und Schönheit, die in jeden Alpe d'Huez-Rahmen eingearbeitet ist, den wir herstellen. Das TIME Alpe d'Huez-Disc zu fahren bedeutet, etwas zu genießen, das sich jeder Beschreibung entzieht und von keinem anderen Fahrrad erreicht werden kann. Dies ist das ultimative Rennrad.

Le développement de l'Alpe d'Huez
L'Alpe d'Huez est bien plus qu'une simple montée du Tour de France. Hélicoptères, escortes policières, fumées bleues, visages peints hurlants et une foule de 300.000 fans de cyclisme garantissent que chaque visite de ce sommet légendaire sera à jamais couronnée de gloire. C'est cette combinaison unique d'histoire, de spectacle, d'effort énorme, de sportivité et de beauté qui est incorporée dans chaque cadre de l'Alpe d'Huez que nous fabriquons. Rouler sur le nouveau vélo à disque TIME Alpe d'Huez, c'est profiter de quelque chose qui échappe à toute description et qu'aucun autre vélo ne peut égaler. C'est le vélo de course ultime.

Bereit zum Malen
Time-Rahmensets können lackierfertig in vorbereitetem und geschliffenem Zustand und mit sämtlicher Hardware erworben werden. Wählen Sie Ihre eigene Lackiererei oder fragen Sie uns nach einem Vorschlag, um das TIME Ihrer Träume zu schaffen.

Prêt à peindre
Les kits de cadre Time peuvent être achetés prêts à peindre, préparés et poncés, avec tout le matériel nécessaire. Choisissez votre propre atelier de peinture ou demandez-nous une proposition pour créer le TIME de vos rêves.

Im Leistungsumfang enthalten
- DEDA S DCR / FSA Headset für halb- und vollintegrierte Cockpits
- Steckachsen vorn und hinten
- Flaschenschrauben aus Aluminiumlegierung
- Integrierte Sattelstützenklemme
- Schaltauge
- Umbausatz für Einzelabdeckung und Antriebsstrang

Inclus dans les spécifications
- *Casque DEDA S DCR / FSA pour les cockpits semi-intégrés et entièrement intégrés*
- *Axes enfichables à l'avant et à l'arrière*
- *Vis de bidon en alliage d'aluminium*
- *Pince de tige de selle intégrée*
- *Patte de dérailleur*
- *Kit de conversion de capot simple et de transmission*

ALPE D'HUEZ DISC FRAME SPECIFICATIONS	
FRAME MATERIAL BCS Carbon Fiber, Vectran™ and Dyneema® Enhanced	THRU AXLES 12x120x1.5mm Pitch F, 12x159x1.5mm Pitch R
SIZES XS, S, M, L, XL	SEATPOST DIAMETER ø27.2mm
FORK STEERER TUBE Tapered 1-1/8" to 1-½" Vectran™ Enhanced	SEATPOST CLAMP Proprietary ADH Alloy
HEADSET BEARINGS Top and Bottom: 1-½* (with internal routing compression ring)	SHIFTING Compatible with Electronic Shifting Systems Only
WHEEL SIZE 700c, ETRTO 38-622	FRONT DERAILLEUR 1X and 2X Compatible
MAXIMUM TIRE WIDTH 280	REAR DERAILLEUR Standard Mount
BOTTOM BRACKET PF BB386 EVO	BRAKE TYPE Front and Rear Flat Mount Disc
DISC HUB STANDARD 12x100mm F, 12x142mm R	ROTOR SIZE Max 160mm with DM Adapter

ADH SIZE	XS	S	M	L	XL
1 SEAT TUBE (ACTUAL)	450	470	510	540	565
2 TOP TUBE (VIRTUAL)	513	531	555	570	580
3 SEAT TUBE ANGLE	74.7°	74°	73°	73°	73°
4 HEAD TUBE ANGLE	71°	72.5°	73°	73°	73.5°
5 HEAD TUBE	122	142	166	186	204
6 FORK OFFSET	43	43	43	43	43
7 AXLE TO CROWN	368	368	368	368	368
8 TRAIL	70	61	58	58	55
9 FRONT CENTER	575	575	584	599	604
10 CHAINSTAY	410	410	410	410	410
11 DROP	65	65	95	65	65
12 WHEELBASE	977	976	985	1000	1005
13 STACK	514	530	562	582	601
14 REACH	372	377	383	392	397

CUAG SPORTS AG | C/O HOHLE GASSE | ARTHERSTR. 60 | 6405 IMMENSEE | +41412595100 | INFO@CUAGSPORTS.COM | CUAGSPORTS-SHOP.COM

Art.- Nr. | Réf.	Bezeichnung | Description

ALPE D'HUEZ X

75242225 V11	**GLOSS CARBON** XS, S, M, L, XL
75242225 V40	**CARBON SHIFT CYAN** XS, S, M, L, XL
75242225 V41*	**CARBON SHIFT MAGENTA** XS, S, M, L, XL
75242225 V42*	**CARBON SHIFT GREEN** XS, S, M, L, XL
75242225 V43*	**SILVER** XS, S, M, L, XL
75242225 RTP*	**READY TO PAINT** XS, S, M, L, XL

* auf Bestellung 4 - 6 Wochen | *sur commande 4 - 6 semaines*

Art.- Nr. | Réf. Bezeichnung | Description

Das moderne Rennrad für verschiedene Untergründe
Lernen Sie Alpe d'Huez X kennen – den Höhepunkt an Agilität und erweiterten Möglichkeiten. Entwickelt für breitere Straßenreifen, bietet es eine ruhige Fahrt auf rauem Asphalt und schnelle Beschleunigung für anspruchsvolle Gruppenfahrten. Vielseitig und komfortabel, zeichnet sich Alpe d'Huez X auf jeder Strecke und jeder Straße aus und sorgt dafür, dass Sie auch morgen wieder bereit sind.
Bereit zum malen: Time-Rahmensets können lackierfertig in vorbereitetem und geschliffenem Zustand und mit sämtlicher Hardware erworben werden. Wählen Sie Ihre eigene Lackiererei, um das TIME Ihrer Träume zu gestalten.

Im Leistungsumfang enthalten
- DEDA S DCR / FSA Headset für halb- und vollintegrierte Cockpits
- Steckachsen vorn und hinten
- Flaschenschrauben aus Aluminiumlegierung
- Integrierte Sattelstützenklemme
- Schaltauge
- Umbausatz für Einzelabdeckung und Antriebsstrang

L'évolution de l'Alpe d'Huez
l'Alpe d'Huez est bien plus qu'une simple ascension du Tour de France. Hélicoptères, escortes policières, fumée bleue, visages peints criant à tue-tête, et une foule de 300 000 fans de cyclisme garantissent que chaque visite à ce sommet légendaire sera à jamais couronnée de gloire. C'est cette combinaison unique d'histoire, de spectacle, d'effort immense, de sportivité et de beauté qui est intégrée dans chaque cadre Alpe d'Huez que nous fabriquons. Rouler avec la nouvelle roue à disque TIME Alpe d'Huez, c'est profiter de quelque chose d'indescriptible, qu'aucun autre vélo ne peut égaler. C'est le vélo de course ultime.

Inclus dans les spécifications
- *Casque DEDA S DCR / FSA pour les cockpits semi-intégrés et entièrement intégrés*
- *Axes enfichables à l'avant et à l'arrière*
- *Vis de bidon en alliage d'aluminium*
- *Pince de tige de selle intégrée*
- *Patte de dérailleur*
- *Kit de conversion de capot simple et de transmission*

ALPE D'HUEZ X FRAME SPECIFICATIONS	
FRAME MATERIAL BCS Carbon Fiber - Vectran® and Dyneema® Enhanced	THRU AXLES 12x120x1.5mm Pitch F, 12x159x1.5 Pitch R
SIZES XS, SM, MD, LG, XL	SEATPOST DIAMETER ø27.2mm
FORK STEERER TUBE Tapered 1-1/8" to 1-½"	SEATPOST CLAMP Proprietary TIME Alloy
HEADSET BEARINGS Top and Bottom 1-½" (with internal routing compression ring)	SHIFTING Compatible with Electronic and Mechanical Shifting Systems
WHEEL SIZE 700c	FRONT DERAILLEUR 1X and 2X Wide Compatible with Integrated Single Cover and Drivetrain Conversion Kit
MAXIMUM TIRE WIDTH 700x28-38c Road Tires, Optimized for 32-35C (not all tire/rim combinations fit with adequate clearance - check for appropriate fit)	REAR DERAILLEUR Standard Mount
BOTTOM BRACKET PF BB386	BRAKE TYPE Front and Rear Flat Mount Disc
DISC HUB STANDARD 12x100mm F, 12x142mm R	ROTOR SIZE 140/160mm with Adapter

ALPE D'HUEZ X	XS	S	M	L	XL
1 SEAT TUBE (VIRTUAL)	521	539	555	570	581
2 SEAT TUBE (ACTUAL)	455	480	500	530	550
3 TOP TUBE (VIRTUAL)	521	539	555	570	580
4 SEAT TUBE ANGLE	73.7°	73°	73°	73°	73°
5 HEAD TUBE ANGLE	70.5°	71.5°	72.5°	72.5°	73°
6 HEAD TUBE	123	131	149	169	188
7 FORK OFFSET	50	50	50	50	50
8 AXLE TO CROWN	377	377	377	377	377
9 TRAIL	71	64	58	58	54
10 FRONT CENTER	585	581	594	609	615
11 CHAINSTAY	418	418	418	418	418
12 DROP	74	74	74	74	74
13 WHEELBASE	950	994	1021	1016	1022
14 STACK	530	543	562	581	601
15 REACH	366	373	383	392	397

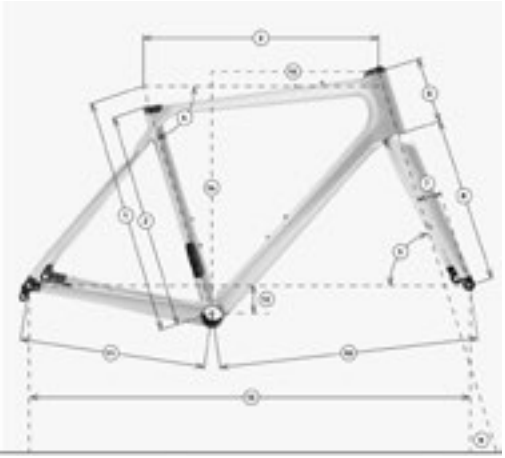

CUAG SPORTS AG | C/O HOHLE GASSE | ARTHERSTR. 60 | 6405 IMMENSEE | +41412595100 | INFO@CUAGSPORTS.COM | CUAGSPORTS-SHOP.COM

Art.- Nr. | Réf.	Bezeichnung | Description

ADHX 45 UDH

75312226 V31*	**GLOSS CARBON UDH** XS, S, M, L, XL
75312226 V43*	**SILVER UDH** XS, S, M, L, XL
75312226 V44*	**CHESTNUT UDH** XS, S, M, L, XL
75312226 V45*	**STEEL BLUE UDH** XS, S, M, L, XL
75312226 V46*	**ROSE UDH** XS, S, M, L, XL
75312226 RTP*	**READY TO PAINT UDH** XS, S, M, L, XL

* auf Bestellung 4 - 6 Wochen | *sur commande 4 - 6 semaines*

Art.- Nr. | Réf. Bezeichnung | Description

Das aggressive Geschwisterkind der Familie Alpe d'Huez
Das ADHX 45 ist das aggressivste Offroad-Bike der TIME-Reihe und wurde für Fahrer entwickelt, die ein geschmeidiges und reaktionsschnelles Hochleistungsrad suchen, das auch unwegsames Gelände bewältigt. Optimiert für 700x45c-Reifen (und kompatibel mit 650x50c) kombiniert das ADHX 45 die Präzision und Technik unserer 30-jährigen Carbonrahmenentwicklung mit einer Geometrie und einem Fahrgefühl, das auf groben, aggressiven Schotter abgestimmt ist.

Bereit zum Malen
Time-Rahmensets können lackierfertig in vorbereitetem und geschliffenem Zustand und mit sämtlicher Hardware erworben werden. Wählen Sie Ihre eigene Lackiererei oder fragen Sie uns nach einem Vorschlag, um das TIME Ihrer Träume zu schaffen.

Im Leistungsumfang enthalten
- FSA Steuersatz/SRS Topcap für halb- und vollintegrierte Cockpits
- Alu-Flaschenschrauben
- Scylon Aero-Sattelstütze
- Steckachsen vorne und hinten
- Semi-Integrierte Sattelstützenklemme
- Umwerfer und Schaltwerkhalter

Le frère agressif de la famille Alpe d'Huez
L'ADHX 45 est le vélo tout-terrain le plus agressif de la gamme TIME. Il est conçu pour les cyclistes à la recherche d'une machine performante, souple et réactive, capable d'affronter les terrains accidentés. Optimisé pour les pneus 700x45c (et compatible avec les 650x50c), l'ADHX 45 allie la précision et l'ingénierie acquises au cours de nos 30 années de développement de cadres en carbone à une géométrie et un comportement optimisés pour le gravel accidenté.

Prêt à peindre
Les kits de cadres Time peuvent être achetés prêts à peindre, préparés et poncés, avec tout le matériel nécessaire. Choisissez votre propre atelier de peinture ou demandez-nous une proposition pour créer le TIME de vos rêves.

Inclus dans la prestation
- *Casque FSA pour cockpits semi-intégrés et entièrement intégrés*
- *Axes traversants avant et arrière*
- *Boulons de bouteille en alliage*
- *Collier de serrage de tige de selle intégré*
- *(1) Patte de dérailleur*
- *Kit de conversion de couvercle unique et de transmission*

ADHX 45 FRAME SPECIFICATIONS	
FRAME MATERIAL BCS Carbon Fiber - Dyneema® Enhanced	THRU AXLES 12x120x1.5mm Pitch F, 12x159x1.5 Pitch R
SIZES XS, SM, MD, LG, XL	SEATPOST DIAMETER ø27.2mm
FORK STEERER TUBE Tapered 1-1/8" to 1-½"	SEATPOST CLAMP Proprietary ADHX Alloy
HEADSET BEARINGS Top and Bottom 1-½" (with internal routing compression ring)	SHIFTING Compatible with Electronic and Standard Shifting Systems
WHEEL SIZE 700c/650b	FRONT DERAILLEUR 1X and 2X Wide Compatible with Integrated Single Cover and Drivetrain Conversion Kit
MAXIMUM TIRE WIDTH 700x32-45c Gravel Tire 650x50c Gravel Tire (not all tire/rim combinations fit with adequate clearance - check for appropriate fit)	REAR DERAILLEUR Universal Derailleur Hanger, Standard Mount
BOTTOM BRACKET PF BB386	BRAKE TYPE Front and Rear Flat Mount Disc
DISC HUB STANDARD 12x100mm F, 12x142mm R	ROTOR SIZE 140/160mm with Adapter

ADHX 45	XS	S	M	L	XL
1 SEAT TUBE (VIRTUAL)	521	539	555	570	581
2 SEAT TUBE (ACTUAL)	405	480	505	530	550
3 TOP TUBE (VIRTUAL)	519	537	553	568	578
4 SEAT TUBE ANGLE	73.5°	72.8°	72.8°	72.8°	72.8°
5 HEAD TUBE ANGLE	70.3°	71.3°	72.3°	72.3°	72.8°
6 HEAD TUBE	123	131	145	169	188
7 FORK OFFSET	53	53	53	50	55
8 AXLE TO CROWN	383	383	383	383	383
9 TRAIL	71	65	59	59	57
10 FRONT CENTER	589	591	598	613	618
11 CHAINSTAY	430	430	430	430	430
12 DROP	71	71	71	71	71
13 WHEELBASE	1009	1011	1018	1033	1038
14 STACK	532	543	564	583	603
15 REACH	364	371	381	390	395

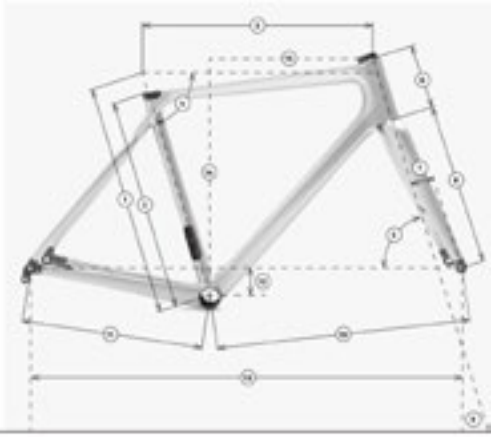

CUAG SPORTS AG | C/O HOHLE GASSE | ARTHERSTR. 60 | 6405 IMMENSEE | +41412595100 | INFO@CUAGSPORTS.COM | CUAGSPORTS-SHOP.COM

FALL WINTER 26

XC Collection

sportful

sportful

WOMAN

POLARTEC®

AirCore™

Beyond Breathable, Protection.

Water repellent. | Air permeabl | Highly breathable. | Windproof. | Comfortable stretch. | Non-PFAS materials. | Recycled materials.

Polartec® AirCoreTM is an innovative air permeable fabric technology that allows maximum breathability while protecting against the harshest winds. Designed to stretch for a full range of movement, the nano-fiber membrane keeps you dry from the inside by helping moisture and vapor escape faster, thanks to its 0.4 - 1 CFM*, while repelling it from the outside**.

- A high performance breathable weather resistant experience.
- Repels rain and moisture.
- Windproof fabric for protection against harsh weather.
- Resilient stretch for a high range of motion during demanding activities.
- Made with a recycled face, back and non-PFAS layers. Reduce your impact, increase your commitments.

New arrival

DORO APEX JACKET

0426558

DORO STYLE

High-performance cross-country jacket with Polartec® Alpha™ insulation.

Polartec® Aircore™ fabric: windproof, breathable, and water-resistant
Polartec® Alpha™ insulation on chest and shoulders for active warmth
Breathable stretch back panel for enhanced ventilation and freedom
Developed with biathlon champion Dorothea Wierer – Doro Style collection

577

SHADED PINK/AZURE

POLARTEC POLARTEC Alpha

TECHNICAL FEATURES

Breathable

Water Repellent

Windproof

TEMPERATURE RANGE

5 °C / 15 °C (41 °F / 59 °F)

SIZE AVAILABLE

XS S M L XL XXL

FIT

Regular

New arrival

DORO APEX PANT

0426560

DORO STYLE

Windproof and breathable cross-country pants with Polartec® Aircore™ fabric.

Polartec® Aircore™ fabric: windproof, breathable, and water-resistant
Stretch back panel for freedom of movement and ventilation
Side zippers up to the knee with triple sliders for easy access
Developed with biathlon champion Dorothea Wierer – Doro Style collection

577
SHADED PINK/AZURE

POLARTEC

TECHNICAL FEATURES

Breathable

Water Repellent

Windproof

TEMPERATURE RANGE
10 °C / 30 °C (50 °F / 86 °F)

SIZE AVAILABLE
XS S M L XL XXL

FIT
Slim

New arrival

DORO APEX VEST

0426559

DORO STYLE

Windproof and breathable cross-country vest with Polartec® Aircore™ fabric.

Polartec® Aircore™ fabric: windproof, breathable, and water-resistant
Stretch back panel for superior airflow and freedom of movement
Two secure front zip pockets for essentials
Developed with biathlon champion Dorothea Wierer – Doro Style collection

577

SHADED PINK/AZURE

POLARTEC

TECHNICAL FEATURES

Breathable

Water Repellent

Windproof

TEMPERATURE RANGE

10 °C / 30 °C (50 °F / 86 °F)

SIZE AVAILABLE

XS S M L XL XXL

FIT

Regular

New arrival

DORO APEX JERSEY

0426561

DORO STYLE

High-performance cross-country jersey with Schoeller® fabric and pro fit.

Schoeller® fabric for elasticity, muscle support, and breathability
Ergonomic race fit for aerodynamic efficiency and precision
Lightweight, ventilated design for high-intensity training and racing
Developed with biathlon champion Dorothea Wierer – Doro Style collection

577

SHADED PINK/AZURE

TECHNICAL FEATURES

Breathable

TEMPERATURE RANGE

-0 °C / 10 °C (32 °F / 50 °F)

SIZE AVAILABLE

XS S M L XL XXL

FIT

Regular

New arrival

DORO APEX TIGHT

0426562

DORO STYLE

High-performance cross-country tights in Schoeller® fabric for race precision.

Schoeller® fabric for elasticity, muscle support, and moisture management
Ergonomic rece fit for aerodynamic efficiency and full freedom of movement
Lightweight, breathable construction ideal for racing and training
Developed with biathlon champion Dorothea Wierer – Doro Style collection

577
SHADED PINK/AZURE

TECHNICAL FEATURES

Breathable

TEMPERATURE RANGE
-5 °C / 5 °C (23 °F / 41 °F)

SIZE AVAILABLE
XS S M L XL XXL

FIT
Regular

New arrival

DORO PUFFY JACKET

0426563

DORO STYLE

Short-sleeve cross-country jacket with Polartec® Alpha® active insulation.

Polartec® Alpha® insulation for active warmth and breathability
Short-sleeve design for mobility and layering versatility
Lightweight and packable for training, recovery
Developed with biathlon champion Dorothea Wierer – Doro Style collection

577
SHADED PINK/AZURE

TECHNICAL FEATURES

Breathable

Water Repellent

Windproof

TEMPERATURE RANGE
-0 °C / 10 °C (32 °F / 50 °F)

SIZE AVAILABLE
XS S M L XL XXL

FIT
Regular

New arrival

DORO CARDIO JACKET

0426564

DORO STYLE

Versatile cross-country jacket combining wind protection and breathability.

PFAS-free windproof and water-repellent front panel for protection
3D breathable back fabric for ventilation and temperature control
Targeted front insulation for warmth without bulk
Developed with biathlon champion Dorothea Wierer – Doro Style collection

101
WHITE

TECHNICAL FEATURES

Breathable

Water Repellent

Windproof

TEMPERATURE RANGE
5 °C / 15 °C (41 °F / 59 °F)

SIZE AVAILABLE
XS S M L XL XXL

FIT
Regular

New arrival

DORO CARDIO FLEECE

0426567

DORO STYLE

Technical fleece for cross-country skiing and winter training comfort.

Developed with Dorothea Wierer for cross-country and winter training
Soft polyester fleece for warmth, breathability, and freedom of movement
Full front zip and ergonomic fit for comfort and ventilation
Two secure zip pockets for essentials on and off the track

101
WHITE

TECHNICAL FEATURES

Breathable

TEMPERATURE RANGE
10 °C / 30 °C (50 °F / 86 °F)

SIZE AVAILABLE
XS S M L XL XXL

FIT
Regular

New arrival

DORO CARDIO TECH TIGHT

0426566

DORO STYLE

Technical tight for cross-country skiing and off ski training with max comfort.

Developed with Dorothea Wierer for all-season endurance training
Stretch fabric and flatlock seams for maximum comfort and mobility
Adjustable waistband with inner drawstring for a precise fit
Integrated pocket for gels or small essentials

002

BLACK

TECHNICAL FEATURES

Breathable

TEMPERATURE RANGE

10 °C / 30 °C (50 °F / 86 °F)

SIZE AVAILABLE

XS S M L XL XXL

FIT

Regular

New arrival

DORO WARM BEANIE

0426557

DORO STYLE

Warm and soft beanie from the Doro Style collection for cross-country lovers.

Soft, insulating fabric for maximum warmth and comfort
Relaxed fit for a cozy feel before and after skiing
Clean, minimalist design with Doro Style details
Developed with biathlon champion Dorothea Wierer

002

BLACK

TECHNICAL FEATURES

Breathable

TEMPERATURE RANGE

-5 °C / 5 °C (23 °F / 41 °F)

SIZE AVAILABLE

UNI

FIT

Regular

New arrival

DORO HEADBAND

0426556

DORO STYLE

Warm and breathable cross-country headband developed with Dorothea Wierer.

Soft and elastic thermal fabric for warmth and comfort
Lightweight and breathable design for high-intensity skiing
Stable fit, perfect paired with other accessories
Developed with biathlon champion Dorothea Wierer – Doro Style collection

577
SHADED PINK/AZURE

TECHNICAL FEATURES

Breathable

TEMPERATURE RANGE
-0 °C / 10 °C (32 °F / 50 °F)

SIZE AVAILABLE
UNI

FIT
Regular

New arrival

APEX 2 W JACKET

0426532

Engineered for Intensity

High-performance cross-country ski jacket with Polartec Aircore and Alpha fabrics

Polartec® Aircore™ outer shell for wind and water protection with high breathability
Polartec® Alpha™ insulation mapped in key zones for lightweight warmth
Breathable back panel enhances moisture control and comfort during effort
Two front zip pockets and performance fit for total freedom of movement

5003
PHOENIX GLOW/COPPER BLAZE

POLARTEC POLARTEC alpha

TECHNICAL FEATURES

Breathable

Waterproof

Water Repellent

Windproof

315
OBLIVION GREEN/FOGGY STONE

087
LUNAR GREY/FOGGY STONE

TEMPERATURE RANGE
15 °C / 35 °C (60 °F / 95 °F)

SIZE AVAILABLE
XS S M L XL XXL

FIT
Regular

New arrival

APEX 2 LIGHT W JACKET

0426533

Light Speed. Full Control.

Light and breathable cross-country ski jacket with Polartec Aircore protection

Polartec® Aircore™ outer for wind and water resistance with high breathability
Lightweight construction inspired by the Apex 2 Jacket for fast-paced training
Breathable back panel for improved moisture management during effort
Two front zip pockets and performance fit for total freedom of movement

087
LUNAR GREY BLACK

POLARTEC

TECHNICAL FEATURES

Breathable

Waterproof

Water Repellent

Windproof

527
GALACTIC PURPLE BLACK

5003
PHOENIX GLOW BLACK

TEMPERATURE RANGE
15 °C / 35 °C (60 °F / 95 °F)

SIZE AVAILABLE
XS S M L XL XXL

FIT
Regular

OFFSET W JACKET

0425527

Master Every Trail.

Windproof, breathable cross-country jacket for ultimate freedom and protection.

Windproof and weather-resistant front for ultimate protection.
Dual-layer construction for warmth and performance.
Breathable back panel to ensure optimal ventilation during intense activities.
Modern design with contrasting color tones for a stylish look on the trails.

101
WHITE/LUNAR GRAY

672
HIBISCUS/BLACK

4507
FROZEN OCEAN/LUNAR GREY

TECHNICAL FEATURES

Breathable

Windproof

TEMPERATURE RANGE
-5 °C / 5 °C (23 °F / 41 °F)

SIZE AVAILABLE
XS S M L XL XXL

FIT
Regular

New arrival

APEX 2 W PANT

0426535

Performance in Every Stride

Breathable windproof cross-country pants with Polartec Aircore protection

Polartec® Aircore™ outer for wind and water protection with superior breathability
Stretch and breathable back panel for comfort and full mobility
Side zippers above the knee with triple sliders for ventilation and easy on/off
Versatile design ideal as standalone pants or as an over-suit layer

125
GUN METAL

POLARTEC

TECHNICAL FEATURES

Breathable

Water Repellent

Windproof

002
BLACK

TEMPERATURE RANGE
15 °C / 35 °C (60 °F / 95 °F)

SIZE AVAILABLE
XS S M L XL XXL

FIT
Regular

OFFSET W PANT

0425530

Move Freely, Perform Better.

Breathable, windproof cross-country pants for optimal comfort and performance

Double-layer protection in key areas for enhanced warmth and weather resistance.
Windproof front panel for optimal protection from the elements.
Breathable back panel to maintain ventilation during high-intensity efforts.
Snug, non-restrictive fit for maximum comfort and full range of motion.

101
WHITE/BLACK

002
BLACK

TECHNICAL FEATURES

Breathable

Windproof

TEMPERATURE RANGE
-5 °C / 5 °C (23 °F / 41 °F)

SIZE AVAILABLE
XS S M L XL XXL

FIT
Regular

New arrival

APEX 2 W VEST

0426534

Freedom in Every Layer

Windproof and breathable cross-country ski vest with Polartec Aircore fabric

Polartec® Aircore™ outer shell for wind and water protection with high breathability
Breathable stretch back panel for moisture control and comfort during effort
Two front zip pockets for easy access and secure storage
Performance fit ideal for layering or high-intensity cross-country training

002
BLACK

POLARTEC

087
LUNAR GREY

TECHNICAL FEATURES

Breathable

Water Repellent

Windproof

TEMPERATURE RANGE
15 °C / 35 °C (60 °F / 95 °F)

SIZE AVAILABLE
XS S M L XL XXL

FIT
Regular

sportful
RUDY
sportful
sportful
APEX

New arrival

APEX 2 W JERSEY

0426537

Fast Feels Better

High-performance cross-country race jersey in Schoeller fabric for speed and comfort

Schoeller® fabric for superior elasticity, breathability, and muscle support
Ergonomic design for aerodynamic efficiency and natural motion
Derived from the Apex race suit for pro-level performance and comfort
Lightweight construction optimized for training and racing intensity

002

BLACK/WHITE/SOLAR BURST

5003

PHOENIX GLOW/COPPER BLAZE/WHIT

4507

FROZEN OCEAN/STELLAR AZURE/VEC

TECHNICAL FEATURES

Breathable

TEMPERATURE RANGE

10 °C / 30 °C (50 °F / 86 °F)

SIZE AVAILABLE

XS S M L XL XXL

FIT

Regular

New arrival

APEX 2 W TIGHT

0426538

Speed Starts Here

High-performance cross-country race tight with Schoeller fabric and pro fit

Schoeller® fabric for superior elasticity, muscle support, and breathability
Ergonomic race fit for aerodynamic performance and full mobility
Excellent moisture management for dry comfort during intense activity
Inspired by the Apex 2 Suit for pro-level precision and technical design

002
BLACK/WHITE/SOLAR BURST

TECHNICAL FEATURES

Breathable

5003
PHOENIX GLOW/COPPER BLAZE/WHIT

4507
FROZEN OCEAN/STELLAR AZURE/VEC

TEMPERATURE RANGE
15 °C / 35 °C (60 °F / 95 °F)

SIZE AVAILABLE
XS S M L XL XXL

FIT
Regular

New arrival

PUFFY W JACKET

0424535

THE SHORT SLEEVE REVOLUTION

A short-sleeve ski jacket in Polartec® Alpha® which ensures excellent temperature and moisture regulation. The design and materials of this garment allow it to be extremely packable, perfect for warm-up and post-training chill.

WR woven fabric on front, upper sleeve, back and hood
Warm stretch fabric on sides and under arms for breathability
POLARTEC® ALPHA® DIRECT on front and back for an optimal insulation
YKK front zip and 2 sides pockets
High collar and elastic edge on hood to fit it better and for major protection against the elements
Regular fit

067
STONE GRAY/BLACK

POLARTEC® alpha®

TECHNICAL FEATURES

Breathable

Water Repellent

Windproof

002
BLACK

TEMPERATURE RANGE
-5 °C / 5 °C (23 °F / 41 °F)

SIZE AVAILABLE
XS S M L XL XXL

FIT
Regular

New arrival

CARDIO INSULATED W JACKET

0426539

Warmth in Motion

Versatile insulated cross-country jacket for training and winter outdoor use

Warm synthetic insulation with windproof and PFAS-free water-repellent fabric
Increased front insulation for targeted warmth and wind protection
Lighter back panel for improved thermoregulation during activity
Hood and two zip pockets for functionality and comfort

101
WHITE BLACK

002
BLACK

856
SOLAR BURST BLACK

5003
PHOENIX GLOW BLACK

TECHNICAL FEATURES

Breathable

Water Repellent

Windproof

TEMPERATURE RANGE
10 °C / 30 °C (50 °F / 86 °F)

SIZE AVAILABLE
XS S M L XL XXL

FIT
Regular

New arrival

CARDIO 2 W JACKET

0426540

Lightness Meets Performance

Light and breathable cross-country jacket with windproof and water-repellent fabric

Windproof and PFAS-free water-repellent front for protection and comfort
Breathable 3D fabric on the back for optimal ventilation and thermoregulation
Light insulation on the front for targeted warmth in key zones
Fixed hood and athletic fit for versatile outdoor performance

5003
PHOENIX GLOW

TECHNICAL FEATURES

Breathable

Water Repellent

Windproof

101
WHITE

856
SOLAR BURST

002
BLACK

TEMPERATURE RANGE
15 °C / 35 °C (60 °F / 95 °F)

SIZE AVAILABLE
XS S M L XL XXL

FIT
Regular

New arrival

CARDIO INSULATED W PANT

0426542

Warmth in Every Step

Insulated and windproof cross-country pants for training and winter activities

Windproof outer fabric with lightweight synthetic insulation for warmth
Ergonomic construction for unrestricted movement and comfort
Two zip pockets and bottom leg zippers for practicality and ventilation
Versatile design for cross-country skiing and winter outdoor activities

002
BLACK

125
GUN METAL

TECHNICAL FEATURES

Breathable

Water Repellent

Windproof

TEMPERATURE RANGE
10 °C / 30 °C (50 °F / 86 °F)

SIZE AVAILABLE
XS S M L XL XXL

FIT
Regular

New arrival

CARDIO 2 W VEST

0426541

Always in Motion

Light and windproof
cross-country vest with
breathable 3D back fabric

Windproof front for protection
from cold air
3D structured fabric adds light
insulation where warmth is
needed
Breathable back panel ensures
optimal moisture control during
effort
Minimal, ergonomic design ideal
for layering and active movement

101
WHITE

TECHNICAL FEATURES

Breathable

Water Repellent

Windproof

002
BLACK

856
SOLAR BURST

TEMPERATURE RANGE
10 °C / 30 °C (50 °F / 86 °F)

SIZE AVAILABLE
XS S M L XL XXL

FIT
Regular

New arrival

CARDIO W FLEECE

0426544

Layer Up. Stay Active.

Warm and soft cross-country mid layer for training and winter outdoor use

Warm and soft polyester fleece for comfort and insulation
Ideal as a mid layer under a jacket or as an outer layer with a vest
Full-length front zipper for ventilation and easy temperature control
Two front zip pockets for functionality and storage

087
LUNAR GREY

TECHNICAL FEATURES

Breathable

672
HIBISCUS

002
BLACK

TEMPERATURE RANGE
10 °C / 30 °C (50 °F / 86 °F)

SIZE AVAILABLE
XS S M L XL XXL

FIT
Regular

New arrival

CARDIO W PANT

0426543

Move Light. Train Hard.

Light and windproof
cross-country pants designed for
comfort and versatility

Windproof stretch fabric for light
protection and full freedom of
movement
Lightweight design ideal for
mid-season or high-intensity
training
Ergonomic fit ensures comfort
and performance in motion
Two pockets for functionality and
ease of use

002
BLACK

125
GUN METAL

TECHNICAL FEATURES

Breathable

Water Repellent

Windproof

TEMPERATURE RANGE
10 °C / 30 °C (50 °F / 86 °F)

SIZE AVAILABLE
XS S M L XL XXL

FIT
Regular

CARDIO TECH W PROTECTED TIGHT

0423554

ESSENTIAL, LIKE TRAINING FOR A HIGH-LEVEL ATHLETE.

Cardio Protected Tight is a versatile tight suitable for running, ski roll and cross-country skiing. The WR treatment on the whole garment protects from light sleet and the wind proof treatment on the front pannel protects without loosing the fabric's breathability. The soft and elastic brushed fabric in the lower front and in the rear part offers full mobility during movement. A pocket with camlock zip on the back makes this tight very practical. The waist width is adjustable thanks to the internal drawstring.

WR Windproof 4 way stretch fabric on upper fron
Breathable warm fabric on the bottom front and back
Camlock zippered poket on back
Elastic with draw cord at waist

002

BLACK

TECHNICAL FEATURES

Breathable

Windproof

TEMPERATURE RANGE

-0 °C / 10 °C (32 °F / 50 °F)

SIZE AVAILABLE

XS S M L XL XXL

FIT

Regular

CARDIO TECH W TIGHT

0423564

TO GO OUTSIDE EVEN IN WINTER

Cardio Tech Tight is an off-seaon tight to keep cross-training on skiroll and running. Maximum freedom of movement and flat stitching make it extremelly comfortable.The waist width is adjustable thanks to the internal drawstring and an integrated pocket is perfect to carry a gel or other small items.

Light weigth 4 way stretch fabric
Flatlock seams
Camlock zippered poket on back
Elastic with draw cord at waist

002
BLACK

TECHNICAL FEATURES

Breathable

TEMPERATURE RANGE
5 °C / 15 °C (41 °F / 59 °F)

SIZE AVAILABLE
XS S M L XL XXL

FIT
Regular

New arrival

LIGHT W TEE SHORT SLEEVES

0426545

Light as speed. Warm as drive.

Ultralight short-sleeve base layer for cross-country skiing performance.

Our lightest base layer, ideal for high-intensity cross-country skiing
Stretch polyester fabric for perfect fit and freedom of movement
Excellent moisture management and quick-drying performance
Minimal seams and short sleeves for all-day comfort under any layer

002
BLACK

TECHNICAL FEATURES

Breathable

TEMPERATURE RANGE
10 °C / 30 °C (50 °F / 86 °F)

SIZE AVAILABLE
XXS XS S M L XL XXL

FIT
Regular

New arrival

LIGHT W TEE LONG SLEEVES

0426546

Light feel. Full motion.

Ultralight long-sleeve base layer for cross-country skiing performance.

Our lightest long-sleeve base layer for cross-country skiing
Stretch polyester fabric for perfect fit and unrestricted movement
Excellent breathability and moisture control for high-intensity sessions
Minimal seams and soft feel for maximum comfort under any layer

002
BLACK

TECHNICAL FEATURES

Breathable

TEMPERATURE RANGE
10 °C / 30 °C (50 °F / 86 °F)

SIZE AVAILABLE
XXS XS S M L XL XXL

FIT
Regular

LIGHT W SHORT

0423556

TO PUSH DE LIMITS IN TOTAL COMFORT

Light short is a lightweight legwarmer to put under tights or trousers. Comfortable and breathable polyester fabric to push the limits. The flat elastic waistband allows to keep it firm without interfering with the top layer.

Light weight brushed fabric to stay warm and dry
Elasticated waist band
Regular fit

002
BLACK

TECHNICAL FEATURES

Breathable

TEMPERATURE RANGE
-0 °C / 10 °C (32 °F / 50 °F)

SIZE AVAILABLE
XXS XS S M L XL XXL

FIT
Slim

LIGHT W TIGHT

0425558

Performance that moves with you.

Light, breathable base layer for cross-country skiing. Designed for ultimate comfort and warmth

Lightweight and breathable polyester fabric for maximum comfort
Flat elastic waistband for a secure, non-bulky fit
Long version of the popular Light Short for extended coverage
Ideal as a base layer for cross-country skiing in cold conditions

002
BLACK

TECHNICAL FEATURES

Breathable

TEMPERATURE RANGE
-0 °C / 10 °C (32 °F / 50 °F)

SIZE AVAILABLE
XS S M L XL XXL

FIT
Slim

New arrival

WINTER W TEE SHORT SLEEVES

0426547

Warmth that moves.

Technical short-sleeve base layer for cross-country skiing in cold conditions.

Ribbed technical fabric for enhanced thermal insulation and breathability
Stretch polyester construction for a perfect, body-hugging fit
Ideal for high-intensity cross-country skiing in cold conditions
Minimal seams for maximum comfort under racing suits or jackets

002
BLACK

TECHNICAL FEATURES

Breathable

TEMPERATURE RANGE
10 °C / 30 °C (50 °F / 86 °F)

SIZE AVAILABLE
XS S M L XL XXL

FIT
Regular

New arrival

WINTER W TEE LONG SLEEVES

0426548

Warmth that performs.

Technical long-sleeve base layer for cross-country skiing in cold conditions.

Ribbed technical fabric for warmth and breathability in cold conditions
High-stretch polyester for an ergonomic, close-to-body fit
Excellent moisture management for high-intensity cross-country skiing
Long sleeves and minimal seams for added protection and comfort

002
BLACK

TECHNICAL FEATURES

Breathable

TEMPERATURE RANGE
10 °C / 30 °C (50 °F / 86 °F)

SIZE AVAILABLE
XXS XS S M L XL XXL

FIT
Regular

New arrival

WINTER W TEE HALFZIP

0426549

Heat meets control.

Technical long-sleeve base layer with half zip for cross-country skiing performance.

Ribbed thermal fabric for warmth and breathability in cold conditions
High collar and half zip for adjustable temperature control
Stretch polyester for perfect fit and full range of motion
Minimal seams and soft feel for maximum comfort under outer layers

002
BLACK

TECHNICAL FEATURES

Breathable

TEMPERATURE RANGE
10 °C / 30 °C (50 °F / 86 °F)

SIZE AVAILABLE
XS S M L XL XXL

FIT
Regular

New arrival

WINTER W TIGHT

0426550

Warmth in motion.

Technical thermal base tight for high-intensity cross-country skiing sessions.

Ribbed thermal fabric for warmth and breathability in cold conditions
Stretch polyester for perfect fit and freedom of movement
Excellent moisture management for high-intensity cross-country skiing
Minimal seams and soft feel for maximum next-to-skin comfort

002
BLACK

TECHNICAL FEATURES

Breathable

TEMPERATURE RANGE
5 °C / 15 °C (41 °F / 59 °F)

SIZE AVAILABLE
XXS XS S M L XL XXL

FIT
Regular

New arrival

VEST W ALPHA

0426552

Warmth without limits.

Polartec Alpha thermal vest for cross-country skiing performance and versatility.

Polartec® Alpha® fabric for adaptive thermal regulation
Exceptional breathability and quick moisture transfer
Full-length zip for easy ventilation control
Ideal as a mid-layer or worn directly over a base layer

002
BLACK

TECHNICAL FEATURES

Breathable

TEMPERATURE RANGE
10 °C / 30 °C (50 °F / 86 °F)

SIZE AVAILABLE
XS S M L XL XXL

FIT
Slim

New arrival

WOMAN BRA

0426551

Freedom in Every Move

Breathable and supportive cross-country bra for freedom and all-day comfort

Lightweight and breathable fabric for excellent moisture management
Adjustable straps for customized fit and total freedom of movement
Medium support and regular fit for multisport versatility
Soft touch and stable construction for lasting comfort on and off snow

002
BLACK

101
WHITE

TECHNICAL FEATURES

Breathable

TEMPERATURE RANGE
10 °C / 30 °C (50 °F / 86 °F)

SIZE AVAILABLE
S M L

FIT
Regular

sportful

ACCESS

ORIES

APEX 2 GLOVES

0425534

Racing-fit cross country gloves with grip, insulation, and touchscreen technology

002
BLACK

Racing-fit design for a snug, precise fit and optimal control
Grip-enhanced palm for secure pole handling in challenging conditions
Touchscreen compatibility on thumb and index finger for added convenience
Medium-weight insulation for balanced warmth and breathability

TEMPERATURE RANGE -5 °C / 5 °C (23 °F / 41 °F)

SIZE AVAILABLE XXS XS S M L XL XXL

FIT Slim

TECHNICAL FEATURES

Breathable

Water Repellent

Windproof

APEX 2 LIGHT GLOVES

0425531

Lightweight cross country gloves with grip, racing fit, and touchscreen capability

002
BLACK

Racing-fit design for optimal control and precision
Lightweight construction with extended cuffs for added protection
Grip-enhanced palm for secure pole handling in intense conditions
Touchscreen compatibility on thumb and index finger for device use

TEMPERATURE RANGE -0 °C / 10 °C (32 °F / 50 °F)

SIZE AVAILABLE XXS XS S M L XL XXL

FIT Slim

TECHNICAL FEATURES

Breathable

Water Repellent

Windproof

New arrival

AIRCORE GLOVES

0426520

Polartec Aircore gloves for wind protection, breathability, and superior grip.

002
BLACK

Polartec® Aircore™ 300 fabric for warmth, wind protection, and breathability
PFAS-free and 5,000 mm water-resistant for sustainable performance
Pre-shaped palm with no padding for precision and maximum grip
Breathable technical palm fabric ensures comfort in every condition

TEMPERATURE RANGE 15 °C / 35 °C (60 °F / 95 °F)

SIZE AVAILABLE XXS XS S M L XL XXL

FIT Slim

TECHNICAL FEATURES

Breathable

Water Repellent

Windproof

ALPHA LYCRA GLOVES

0425554

Insulated Lycra gloves with Polartec Alpha for warmth, breathability, and superior grip

002
BLACK

Polartec Alpha insulation for warmth and breathability during cold sessions
Grip-enhanced palm for secure pole handling in challenging conditions
Lycra fabric for a flexible, snug fit that moves with your hands
Ideal for cross country skiing in colder weather without sacrificing control

TEMPERATURE RANGE -5 °C / 5 °C (23 °F / 41 °F)

SIZE AVAILABLE XXS XS S M L XL XXL

FIT Regular

TECHNICAL FEATURES

Breathable

LYCRA RACE GLOVES

0425532

Lightweight Lycra race gloves offering enhanced grip and breathability for warm days

002
BLACK

Lightweight Lycra fabric for maximum breathability and comfort
Grip-enhanced palm for secure pole handling during intense races
No membrane design for optimal airflow and reduced overheating
Flexible fit for total freedom of movement during performance

TEMPERATURE RANGE 5 °C / 15 °C (41 °F / 59 °F)

SIZE AVAILABLE XXS XS S M L XL XXL

FIT Regular

TECHNICAL FEATURES

Breathable

SUBZERO GLOVES

0422532

A glove for activities in the coldest conditions

002
BLACK

Ripstop fabric with wind- and water-resistant membrane
PrimaLoft® 80 g insulation
Synthetic leather palm
Longer cuff to allow smartwatch to be worn outside

TEMPERATURE RANGE -5 °C / 5 °C (23 °F / 41 °F)

SIZE AVAILABLE XS S M L XL XXL

FIT Regular

TECHNICAL FEATURES

Breathable

Water Repellent

Windproof

SUBZERO 3F GLOVES

0422533

The intermediate solution for activities in the coldest conditions

002
BLACK

Ripstop fabric with wind- and water-resistant membrane
PrimaLoft® 80 g insulation
Synthetic leather palm
Longer cuff to allow smartwatch to be worn outside

TEMPERATURE RANGE -5 °C / 5 °C (23 °F / 41 °F)

SIZE AVAILABLE XS S M L XL XXL

FIT Regular

TECHNICAL FEATURES

Breathable

Water Repellent

Windproof

SUBZERO MITTEN GLOVES

0422551

Mitten to be worn while skiing

002
BLACK

Ripstop fabric with wind- and water-resistant membrane
PrimaLoft® 80 g insulation
Synthetic leather palm
Longer cuff to allow smartwatch to be worn outside

TEMPERATURE RANGE -5 °C / 5 °C (23 °F / 41 °F)

SIZE AVAILABLE XS S M L XL XXL

FIT Regular

TECHNICAL FEATURES

Breathable

Water Repellent

Windproof

New arrival

ACTIVE HEADBAND

0426521

Soft, stretchy headband for cross-country skiing comfort and warmth.

150
BRIGHT WHITE

388
LUNAR LEMON

669
SUNSET VOLTAGE

057
COOL ALLOY

Soft, elastic and warm fabric for optimal comfort
Lightweight and breathable for active cross-country use
Minimal, solid-color design with clean Sportful style
Perfect fit paired with a neck warmer

TEMPERATURE RANGE 15 °C / 35 °C (60 °F / 95 °F)

SIZE AVAILABLE UNI

FIT Slim

TECHNICAL FEATURES

Breathable

New arrival

ACTIVE CAP

0426522

Soft, stretchy cross-country ski cap for warmth and comfort in every session.

057
COOL ALLOY

388
LUNAR LEMON

150
BRIGHT WHITE

669
SUNSET VOLTAGE

Soft, elastic and warm fabric for optimal comfort
Lightweight and breathable construction for cross-country use
Minimal solid-color design with clean Sportful style
Perfect fit for wearing alone

TEMPERATURE RANGE 15 °C / 35 °C (60 °F / 95 °F)

SIZE AVAILABLE UNI

FIT Slim

TECHNICAL FEATURES

Breathable

New arrival

ACTIVE POM PON CAP

0426523

Soft, warm cross-country ski cap with pompon and elastic comfort fit.

057
COOL ALLOY

669
SUNSET VOLTAGE

150
BRIGHT WHITE

388
LUNAR LEMON

Soft, elastic and warm fabric for optimal comfort
Lightweight and breathable for active cross-country use
Minimal solid-color design with distinctive pompon detail
Perfect for training and racing

TEMPERATURE RANGE 15 °C / 35 °C (60 °F / 95 °F)

SIZE AVAILABLE UNI

FIT Slim

TECHNICAL FEATURES

Breathable

New arrival

NORDIC BEANIE

0426524

Soft, warm wool-blend cross-country beanie with classic Nordic style.

101
WHITE

002
BLACK

Warm and soft wool-blend fabric (30% wool)
Breathable and comfortable for training or après-ski use
Classic solid-color design with Nordic-inspired style
Elastic construction for a stable, comfortable fit

TEMPERATURE RANGE 15 °C / 35 °C (60 °F / 95 °F)

SIZE AVAILABLE UNI

FIT Slim

TECHNICAL FEATURES

Breathable

New arrival

FLEECE CAP

0426555

Fleece cross-country cap with visor for warmth and a bold look on and off snow

002
BLACK

Warm and breathable stretch fleece construction
Integrated visor for sun and snow protection
Ergonomic fit for comfort and stability
Sportful style for training, racing, or après-ski moments

TEMPERATURE RANGE -0 °C / 10 °C (32 °F / 50 °F)

SIZE AVAILABLE UNI

FIT Regular

TECHNICAL FEATURES

Breathable

New arrival

LIGHT NECKWARMER

0426526

Lightweight cross-country neckwarmer for breathable warmth and all-day comfort

105
CREAM

002
BLACK

Lightweight and breathable fabric for versatile cold-weather protection
Soft and comfortable on the skin, even during long sessions
Stretch fit for stability and unrestricted movement
Compact and easy to pack when conditions change

TEMPERATURE RANGE 15 °C / 35 °C (60 °F / 95 °F)

SIZE AVAILABLE UNI

FIT Slim

TECHNICAL FEATURES

Breathable

New arrival

WINTER NECKWARMER

0426527

Thermal cross-country neckwarmer for warmth, breathability, and comfort in motion

087
LUNAR ROCK

002
BLACK

376
CREVASSE BLUE

Soft brushed thermal fabric for warmth and moisture management
Ergonomic fit and stretch construction for freedom of movement
Breathable design prevents overheating during intense activity
Compact and lightweight for easy storage and all-day comfort

TEMPERATURE RANGE 15 °C / 35 °C (60 °F / 95 °F)

SIZE AVAILABLE UNI

FIT Slim

TECHNICAL FEATURES

Breathable

New arrival

WINTER BEANIE

0426525

Soft, warm cross-country beanie for everyday comfort after training.

002
BLACK

105
CREAM

Soft, warm and insulating fabric for all-day comfort
Generous fit for full warmth and protection
Minimal solid-color design with a clean Sportful look
Perfect for après-ski, recovery or everyday winter wear

TEMPERATURE RANGE 15 °C / 35 °C (60 °F / 95 °F)

SIZE AVAILABLE UNI

FIT Slim

TECHNICAL FEATURES

Breathable

ACTIVE SOCKS

0426528

Light, breathable XC socks for training and racing with stable, moisture-control fit

101
WHITE

002
BLACK

Lightweight, breathable polyamide construction for moisture control
20 cm height ideal for XC ski boots and dryland training
Tight, compact fit for maximum stability during dynamic movement
Durable design built for daily training and racing conditions

TEMPERATURE RANGE 10 °C / 30 °C (50 °F / 86 °F)

SIZE AVAILABLE S M L

FIT Regular

TECHNICAL FEATURES

Breathable

WINTER WOOL SOCKS

0426529

Warm, stable XC wool socks for training and racing with a snug, winter-ready fit

002
BLACK GREY

Wool-blend construction for natural warmth and moisture regulation
20 cm height provides optimal coverage and XC boot stability
Tight, compact fit stays in place during dynamic movements
Soft, durable knit for winter training and racing conditions

TEMPERATURE RANGE 10 °C / 30 °C (50 °F / 86 °F)

SIZE AVAILABLE S M L

FIT Aero

TECHNICAL FEATURES

Breathable

WINTER WOOL LONG SOCKS

0426530

Long wool XC socks for winter training and racing with warm, stable and snug fit

002
BLACK GREY

Below-knee wool construction for maximum winter warmth and protection
Tight, stable fit that stays in place during dynamic XC movements
Natural thermoregulation for warm, dry comfort in cold conditions
Soft, durable knit ideal for long training days and racing

TEMPERATURE RANGE 10 °C / 30 °C (50 °F / 86 °F)

SIZE AVAILABLE S M L

FIT Regular

TECHNICAL FEATURES

Breathable

sportful
Peak Performance

TRAINING BELT

0426554

Light, stable cross-country training belt for hydration and essentials on the move

002
BLACK

Ultralight stretch construction for stability and comfort
Multiple pockets for hydration, gels, and essentials
Anti-bounce fit adapts naturally to your movement
Compatible with 500 ml soft flasks (not included)

TEMPERATURE RANGE -0 °C / 10 °C (32 °F / 50 °F)

SIZE AVAILABLE S M L

FIT Regular

TECHNICAL FEATURES

Breathable

NORDIC HIP PACK

0426531

Insulated cross-country hydration belt with 700 ml bottle and storage pocket

002
BLACK

700 ml insulated bottle for optimal hydration during cold sessions
Ergonomic adjustable belt for stability and comfort while skiing
Thermal protection keeps liquids from freezing or overheating
Large zip pocket for personal items and easy-access storage

TEMPERATURE RANGE 10 °C / 30 °C (50 °F / 86 °F)

SIZE AVAILABLE UNI

FIT Aero

TECHNICAL FEATURES

Breathable

Water Repellent

sportful

MAN

New arrival

APEX 2 JACKET

0426500

Engineered for Intensity

High-performance cross-country ski jacket with Polartec Aircore and Alpha fabrics

Polartec® Aircore™ outer shell for wind and water protection with high breathability
Polartec® Alpha™ insulation mapped in key zones for lightweight warmth
Breathable back panel enhances moisture control and comfort during effort
Two front zip pockets and performance fit for total freedom of movement

087
LUNAR GREY/FOGGY STONE

POLARTEC POLARTEC alpha

TECHNICAL FEATURES

Breathable

Waterproof

Water Repellent

Windproof

4507
FROZEN/OCEAN BLACK

5003
PHOENIX GLOW/COPPER BLAZE

TEMPERATURE RANGE

SIZE AVAILABLE
XS S M L XL XXL 3XL

FIT
Slim

New arrival

APEX 2 LIGHT JACKET

0426501

Light Speed. Full Control.

Light and breathable cross-country ski jacket with Polartec Aircore protection

Polartec® Aircore™ outer for wind and water resistance with high breathability
Lightweight construction inspired by the Apex 2 Jacket for fast-paced training
Breathable back panel for improved moisture management during effort
Two front zip pockets and performance fit for total freedom of movement

315
OBLIVION GREEN BLACK

POLARTEC

TECHNICAL FEATURES

Breathable

Waterproof

Water Repellent

Windproof

5003
PHOENIX GLOW BLACK

4507
FROZEN OCEAN BLACK

087
LUNAR GREY BLACK

TEMPERATURE RANGE
-0 °C / 10 °C (32 °F / 50 °F)

SIZE AVAILABLE
XS S M L XL XXL 3XL

FIT
Slim

OFFSET JACKET

0425519

Master Every Trail.

Windproof, breathable cross-country jacket for ultimate freedom and protection.

Windproof and weather-resistant front for ultimate protection.
Dual-layer construction for warmth and performance.
Breathable back panel to ensure optimal ventilation during intense activities.
Modern design with contrasting color tones for a stylish look on the trails.

5003
PHOENIX GLOW/BLACK

TECHNICAL FEATURES

Breathable

Windproof

002
BLACK

4507
FROZEN OCEAN/BLACK

250
CEMENT/BLACK

TEMPERATURE RANGE
-5 °C / 5 °C (23 °F / 41 °F)

SIZE AVAILABLE
XS S M L XL XXL 3XL

FIT
Regular

ROSSIGNOL

APEX 2 PANT

0426503

Performance in Every Stride

Breathable windproof cross-country pants with Polartec Aircore protection

Polartec® Aircore™ outer for wind and water protection with superior breathability
Stretch and breathable back panel for comfort and full mobility
Side zippers above the knee with triple sliders for ventilation and easy on/off
Versatile design ideal as standalone pants or as an over-suit layer

002
BLACK

POLARTEC

TECHNICAL FEATURES

Breathable

Water Repellent

Windproof

125
GUN METAL

TEMPERATURE RANGE

SIZE AVAILABLE
XS S M L XL XXL 3XL

FIT
Slim

OFFSET PANT

0425522

Move Freely, Perform Better.

Breathable, windproof cross-country pants for optimal comfort and performance

Double-layer protection in key areas for enhanced warmth and weather resistance.
Windproof front panel for optimal protection from the elements.
Breathable back panel to maintain ventilation during high-intensity efforts.
Snug, non-restrictive fit for maximum comfort and full range of motion.

250
CEMENT/BLACK

002
BLACK

TECHNICAL FEATURES

Breathable

Windproof

TEMPERATURE RANGE
-5 °C / 5 °C (23 °F / 41 °F)

SIZE AVAILABLE
XS S M L XL XXL 3XL

FIT
Regular

New arrival

APEX 2 VEST

0426502

Freedom in Every Layer

Windproof and breathable cross-country ski vest with Polartec Aircore fabric

Polartec® Aircore™ outer shell for wind and water protection with high breathability
Breathable stretch back panel for moisture control and comfort during effort
Two front zip pockets for easy access and secure storage
Performance fit ideal for layering or high-intensity cross-country training

087
LUNAR GREY

POLARTEC

002
BLACK

TECHNICAL FEATURES

Breathable

Water Repellent

Windproof

TEMPERATURE RANGE
-5 °C / 5 °C (23 °F / 41 °F)

SIZE AVAILABLE
XS S M L XL XXL 3XL

FIT
Slim

New arrival

APEX 2 SUIT

0426504

Race Beyond Boundaries

Elite cross-country race suit with advanced Schoeller fabric and aerodynamic design

Advanced Schoeller® fabric for superior elasticity, breathability, and muscle support
Ergonomic race fit engineered for aerodynamics and natural motion
Improved Apex 2 construction with lighter materials and enhanced ventilation zones
Developed with elite athletes for maximum comfort and race-day performance

002

BLACK/WHITE/NEON WHISPER

TECHNICAL FEATURES

Breathable

5003

PHOENIX GLOW/COPPER BLAZE/BLAC

4507

FROZEN OCEAN/GALAXY BLUE/PHOEN

TEMPERATURE RANGE

5 °C / 15 °C (41 °F / 59 °F)

SIZE AVAILABLE

XS S M L XL XXL 3XL

FIT

Slim

New arrival

APEX 2 JERSEY

0426505

Fast Feels Better

High-performance cross-country race jersey in Schoeller fabric for speed and comfort

Schoeller® fabric for superior elasticity, breathability, and muscle support
Ergonomic design for aerodynamic efficiency and natural motion
Derived from the Apex race suit for pro-level performance and comfort
Lightweight construction optimized for training and racing intensity

002

BLACK/WHITE/NEON WHISPER

TECHNICAL FEATURES

Breathable

4507

FROZEN OCEAN/GALAXY BLUE/PHOEN

5003

PHOENIX GLOW/COPPER BLAZE/BLAC

TEMPERATURE RANGE
5 °C / 15 °C (41 °F / 59 °F)

SIZE AVAILABLE
XS S M L XL XXL 3XL

FIT
Slim

New arrival

APEX 2 TIGHT

0426506

Speed Starts Here

High-performance cross-country race tight with Schoeller fabric and pro fit

Schoeller® fabric for superior elasticity, muscle support, and breathability
Ergonomic race fit for aerodynamic performance and full mobility
Excellent moisture management for dry comfort during intense activity
Inspired by the Apex 2 Suit for pro-level precision and technical design

002
BLACK/WHITE/NEON WHISPER

TECHNICAL FEATURES

Breathable

4507
FROZEN OCEAN/GALAXY BLUE/PHOEN

5003
PHOENIX GLOW/COPPER BLAZE/BLAC

TEMPERATURE RANGE
5 °C / 15 °C (41 °F / 59 °F)

SIZE AVAILABLE
XS S M L XL XXL 3XL

FIT
Slim

PUFFY JACKET

0424534

THE SHORT SLEEVE REVOLUTION

A short-sleeve ski jacket in Polartec® Alpha® which ensures excellent temperature and moisture regulation. The design and materials of this garment allow it to be extremely packable, perfect for warm-up and post-training chill.

WR woven fabric on front, upper sleeve, back and hood
Warm stretch fabric on sides and under arms for breathability
POLARTEC® ALPHA® DIRECT on front and back for an optimal insulation
YKK front zip and 2 sides pockets
High collar and elastic edge on hood to fit it better and for major protection against the elements
Regular fit

067

STONE GRAY/BLACK

POLARTEC® alpha®

TECHNICAL FEATURES

Breathable

Water Repellent

Windproof

002

BLACK

TEMPERATURE RANGE
-5 °C / 5 °C (23 °F / 41 °F)

SIZE AVAILABLE
XS S M L XL XXL 3XL

FIT
Regular

PUFFY OVER SHORT

0424536

KEEP YOUR LEGS READY.

Warm-up overshorts in Polartec® Alpha® with several clever features, such as the two full zips on the sides for easy removal without taking off the ski boots.

WR woven fabric on front and back
Warm stretch fabric on sides for breathability
POLARTEC® ALPHA® DIRECT on front and back for an optimal insulation
YKK sides zip for an easy take off and 1 sides pocket
Regular fit

002
BLACK

TECHNICAL FEATURES

Breathable

Water Repellent

Windproof

TEMPERATURE RANGE
-5 °C / 5 °C (23 °F / 41 °F)

SIZE AVAILABLE
XXS XS S M L XL XXL 3XL

FIT
Regular

New arrival

CARDIO INSULATED JACKET

0426507

Warmth in Motion

Versatile insulated cross-country jacket for training and winter outdoor use

Warm synthetic insulation with windproof and PFAS-free water-repellent fabric
Increased front insulation for targeted warmth and wind protection
Lighter back panel for improved thermoregulation during activity
Hood and two zip pockets for functionality and comfort

101
WHITE BLACK

TECHNICAL FEATURES

Breathable

Water Repellent

Windproof

5003
PHOENIX GLOW BLACK

002
BLACK

3509
NEON WHISPER/BLACK

TEMPERATURE RANGE

SIZE AVAILABLE
XS S M L XL XXL 3XL

FIT
Regular

New arrival

CARDIO 2 JACKET

0426508

Lightness Meets Performance

Light and breathable cross-country jacket with windproof and water-repellent fabric

Windproof and PFAS-free water-repellent front for protection and comfort
Breathable 3D fabric on the back for optimal ventilation and thermoregulation
Light insulation on the front for targeted warmth in key zones
Fixed hood and athletic fit for versatile outdoor performance

5003
PHOENIX GLOW

TECHNICAL FEATURES

Breathable

Water Repellent

Windproof

002
BLACK

4507
FROZEN OCEAN

3509
NEON WHISPER

TEMPERATURE RANGE
5 °C / 15 °C (41 °F / 59 °F)

SIZE AVAILABLE
XS S M L XL XXL 3XL

FIT
Regular

New arrival

CARDIO INSULATED PANT

0426510

Warmth in Every Step

Insulated and windproof cross-country pants for training and winter activities

Windproof outer fabric with lightweight synthetic insulation for warmth
Ergonomic construction for unrestricted movement and comfort
Two zip pockets and bottom leg zippers for practicality and ventilation
Versatile design for cross-country skiing and winter outdoor activities

125
GUN METAL

002
BLACK

TECHNICAL FEATURES

Breathable

Water Repellent

Windproof

TEMPERATURE RANGE

SIZE AVAILABLE
XS S M L XL XXL 3XL

FIT
Regular

New arrival

CARDIO PANT

0426511

Move Light. Train Hard.

Light and windproof
cross-country pants designed for
comfort and versatility

Windproof stretch fabric for light
protection and full freedom of
movement
Lightweight design ideal for
mid-season or high-intensity
training
Ergonomic fit ensures comfort
and performance in motion
Two pockets for functionality and
ease of use

002
BLACK

TECHNICAL FEATURES

Breathable

Water Repellent

Windproof

125
GUN METAL

TEMPERATURE RANGE
5 °C / 15 °C (41 °F / 59 °F)

SIZE AVAILABLE
XS S M L XL XXL 3XL

FIT
Regular

New arrival

CARDIO 2 VEST

0426509

Always in Motion

Light and windproof cross-country vest with breathable 3D back fabric

Windproof front for protection from cold air
3D structured fabric adds light insulation where warmth is needed
Breathable back panel ensures optimal moisture control during effort
Minimal, ergonomic design ideal for layering and active movement

3509
NEON WHISPER

TECHNICAL FEATURES

Breathable

Water Repellent

Windproof

002
BLACK

101
WHITE

TEMPERATURE RANGE
5 °C / 15 °C (41 °F / 59 °F)

SIZE AVAILABLE
XS S M L XL XXL 3XL

FIT
Regular

New arrival

CARDIO FLEECE

0426512

Layer Up. Stay Active.

Warm and soft cross-country mid layer for training and winter outdoor use

Warm and soft polyester fleece for comfort and insulation
Ideal as a mid layer under a jacket or as an outer layer with a vest
Full-length front zipper for ventilation and easy temperature control
Two front zip pockets for functionality and storage

087
LUNAR GREY

3509
NEON WHISPER

002
BLACK

TECHNICAL FEATURES

Breathable

TEMPERATURE RANGE
5 °C / 15 °C (41 °F / 59 °F)

SIZE AVAILABLE
XS S M L XL XXL 3XL

FIT
Regular

CARDIO TECH PROTECTED TIGHT

0423552

ESSENTIAL, LIKE TRAINING FOR A HIGH-LEVEL ATHLETE.

Cardio Protected Tight is a versatile tight suitable for running, ski roll and cross-country skiing. The WR treatment on the whole garment protects from light sleet and the wind proof treatment on the front pannel protects without loosing the fabric's breathability. The soft and elastic brushed fabric in the lower front and in the rear part offers full mobility during movement. A pocket with camlock zip on the back makes this tight very practical. The waist width is adjustable thanks to the internal drawstring.

WR Windproof 4 way stretch fabric on upper front
WR breathable warm fabric on the bottom front and back
Flatlock seams
Camlock zippered poket on back
Elastic with draw cord at waist

002

BLACK

TECHNICAL FEATURES

Breathable

Windproof

TEMPERATURE RANGE

-0 °C / 10 °C (32 °F / 50 °F)

SIZE AVAILABLE

XS S M L XL XXL 3XL

FIT

Regular

CARDIO TECH TIGHT

0423563

TO GO OUTSIDE EVEN IN WINTER

Cardio Tech Tight is an off-seaon tight to keep cross-training on skiroll and running. Maximum freedom of movement and flat stitching make it extremelly comfortable.The waist width is adjustable thanks to the internal drawstring and an integrated pocket is perfect to carry a gel or other small items.

Light weigth 4 way stretch fabric
Flatlock seams
Camlock zippered poket on back
Elastic with draw cord at waist

002
BLACK

TECHNICAL FEATURES

Breathable

TEMPERATURE RANGE
5 °C / 15 °C (41 °F / 59 °F)

SIZE AVAILABLE
XS S M L XL XXL 3XL

FIT
Regular

New arrival

LIGHT TEE SHORT SLEEVES

0426513

Light as speed. Warm as drive.

Ultralight short-sleeve base layer for cross-country skiing performance.

Our lightest base layer, ideal for high-intensity cross-country skiing
Stretch polyester fabric for perfect fit and freedom of movement
Excellent moisture management and quick-drying performance
Minimal seams and short sleeves for all-day comfort under any layer

002
BLACK

TECHNICAL FEATURES

Breathable

TEMPERATURE RANGE
-0 °C / 10 °C (32 °F / 50 °F)

SIZE AVAILABLE
XS S M L XL XXL 3XL

FIT
Slim

New arrival

LIGHT TEE LONG SLEEVES

0426514

Light feel. Full motion.

Ultralight long-sleeve base layer for cross-country skiing performance.

Our lightest long-sleeve base layer for cross-country skiing
Stretch polyester fabric for perfect fit and unrestricted movement
Excellent breathability and moisture control for high-intensity sessions
Minimal seams and soft feel for maximum comfort under any layer

002
BLACK

TECHNICAL FEATURES

Breathable

TEMPERATURE RANGE
15 °C / 35 °C (60 °F / 95 °F)

SIZE AVAILABLE
XS S M L XL XXL 3XL

FIT
Aero

LIGHT SHORT

0423555

TO PUSH DE LIMITS IN TOTAL COMFORT

Light short is a lightweight legwarmer to put under tights or trousers. Comfortable and breathable polyester fabric to push the limits. The flat elastic waistband allows to keep it firm without interfering with the top layer.

Light weight brushed fabric to stay warm and dry
Elasticated waist band
Regular fit

002
BLACK

TECHNICAL FEATURES

Breathable

TEMPERATURE RANGE
-0 °C / 10 °C (32 °F / 50 °F)

SIZE AVAILABLE
XS S M L XL XXL 3XL

FIT
Slim

LIGHT TIGHT

0425557

Performance that moves with you.

Light, breathable base layer for cross-country skiing. Designed for ultimate comfort and warmth

Lightweight and breathable polyester fabric for maximum comfort
Flat elastic waistband for a secure, non-bulky fit
Long version of the popular Light Short for extended coverage
Ideal as a base layer for cross-country skiing in cold conditions

002
BLACK

TECHNICAL FEATURES

Breathable

TEMPERATURE RANGE
-0 °C / 10 °C (32 °F / 50 °F)

SIZE AVAILABLE
XS S M L XL XXL 3XL

FIT
Slim

New arrival

WINTER TEE SHORT SLEEVE

0426515

Warmth that moves.

Technical short-sleeve base layer for cross-country skiing in cold conditions.

Ribbed technical fabric for enhanced thermal insulation and breathability
Stretch polyester construction for a perfect, body-hugging fit
Ideal for high-intensity cross-country skiing in cold conditions
Minimal seams for maximum comfort under racing suits or jackets

002
BLACK

TECHNICAL FEATURES

Breathable

TEMPERATURE RANGE
15 °C / 35 °C (60 °F / 95 °F)

SIZE AVAILABLE
XS S M L XL XXL 3XL

FIT
Regular

New arrival

WINTER TEE LONG SLEEVE

0426516

Warmth that performs.

Technical long-sleeve base layer for cross-country skiing in cold conditions.

Ribbed technical fabric for warmth and breathability in cold conditions
High-stretch polyester for an ergonomic, close-to-body fit
Excellent moisture management for high-intensity cross-country skiing
Long sleeves and minimal seams for added protection and comfort

002
BLACK

TECHNICAL FEATURES

Breathable

TEMPERATURE RANGE
15 °C / 35 °C (60 °F / 95 °F)

SIZE AVAILABLE
XS S M L XL XXL 3XL

FIT
Regular

New arrival

WINTER TEE HALFZIP

0426517

Heat meets control.

Technical long-sleeve base layer with half zip for cross-country skiing performance.

Ribbed thermal fabric for warmth and breathability in cold conditions
High collar and half zip for adjustable temperature control
Stretch polyester for perfect fit and full range of motion
Minimal seams and soft feel for maximum comfort under outer layers

002
BLACK

TECHNICAL FEATURES

Breathable

TEMPERATURE RANGE
15 °C / 35 °C (60 °F / 95 °F)

SIZE AVAILABLE
XS S M L XL XXL 3XL

FIT
Aero

New arrival

WINTER TIGHT

0426518

Warmth in motion.

Technical thermal base tight for high-intensity cross-country skiing sessions.

Ribbed thermal fabric for warmth and breathability in cold conditions
Stretch polyester for perfect fit and freedom of movement
Excellent moisture management for high-intensity cross-country skiing
Minimal seams and soft feel for maximum next-to-skin comfort

002
BLACK

TECHNICAL FEATURES

Breathable

TEMPERATURE RANGE
15 °C / 35 °C (60 °F / 95 °F)

SIZE AVAILABLE
XS S M L XL XXL 3XL

FIT
Regular

New arrival

VEST ALPHA

0426519

Warmth without limits.

Polartec Alpha thermal vest for cross-country skiing performance and versatility.

Polartec® Alpha® fabric for adaptive thermal regulation
Exceptional breathability and quick moisture transfer
Full-length zip for easy ventilation control
Ideal as a mid-layer or worn directly over a base layer

002
BLACK

POLARTEC alpha

TECHNICAL FEATURES

Breathable

TEMPERATURE RANGE
15 °C / 35 °C (60 °F / 95 °F)

SIZE AVAILABLE
XS S M L XL XXL 3XL

FIT
Regular

sportful

sportful.com

FALL WINTER 26

sportful

sportful

MAN

New arrival

FIANDRE HYPERJACKET

1126500

Hyper Protection. Zero Limits.

Advanced waterproof cycling jacket with Polartec Aircore and Power Dry comfort.

Polartec Aircore™ shell with 5,000 mm waterproof rating and high breathability
Polartec Power Dry™ 3D interior for superior moisture and temperature management
Double front zipper and externally taped seams for full weather protection
Regular fit ideal for extreme road and gravel conditions

087
LUNAR ROCK

POLARTEC Aircore™

TECHNICAL FEATURES

Breathable

Waterproof

Water Repellent

Windproof

3509
NEON WHISPER

002
BLACK

TEMPERATURE RANGE
-0 °C / 10 °C (32 °F / 50 °F)

SIZE AVAILABLE
S M L XL XXL 3XL

FIT
Regular

FIANDRE 2 JACKET

1125500

Unmatched Winter Performance.

Winter cycling jacket with exclusive Polartec AirCore for breathability and protection.

Exclusive Polartec AirCore membrane for superior breathability and protection. Wind becomes an ally with effective windproofing design. PFAS-free for sustainable, eco-friendly performance. Object retention technology for secure pocket storage.

096
FOGGY STONE

POLARTEC AirCore™

TECHNICAL FEATURES

Breathable

Water Repellent

Windproof

Waterproof

480
BRIGHT ORANGE

3509
NEON WHISPER

002
BLACK

TEMPERATURE RANGE
-0 °C / 10 °C (32 °F / 50 °F)

SIZE AVAILABLE
S M L XL XXL 3XL

FIT
Regular

FIANDRE SHIFT JACKET

1125502

Adapt to Every Shift.

Ride through unpredictable weather with Sportful Fiandre Shift Jacket. Features Polartec AirCore membrane for superior breathability and wind protection.

Polartec AirCore: Exclusive membrane for superior breathability and wind control.
Weather Protection: Water-resistant fabric ideal for light rain and shifting conditions.
Secure Storage: Rear pockets with retention technology for rough terrains.

294
SAND

POLARTEC

TECHNICAL FEATURES

Breathable

Water Repellent

Windproof

002
BLACK

315
OBLIVION GREEN

801
COPPER BLAZE

TEMPERATURE RANGE
5 °C / 15 °C (41 °F / 59 °F)

SIZE AVAILABLE
S M L XL XXL 3XL

FIT
Regular

FIANORE

New arrival

SRK 2 JACKET

1126501

Born to Breathe. Built to Ride.

High-breathability winter cycling jacket with Polartec Aircore protection.

Polartec Aircore windproof and water-repellent membrane (5,000 mm).
High-breathability thermal back panel for moisture release.
Regular fit designed for road and gravel winter riding.
Three rear pockets for essential storage.

3508
URBAN SAGE

POLARTEC Aircore™

TECHNICAL FEATURES

Breathable

Water Repellent

Windproof

480
BRIGHT ORANGE

002
BLACK

415
TEAL BLUE

TEMPERATURE RANGE
-0 °C / 10 °C (32 °F / 50 °F)

SIZE AVAILABLE
S M L XL XXL 3XL

FIT
Regular

SUPERGIARA 2 JACKET

1125503

Dual-Layer Warmth, Unmatched Comfort.

Dual-layer cycling jacket with Polartec Alpha for warmth, breathability, and weather protection.

Dual-layer design with outer membrane and Polartec Alpha for warmth and breathability.
Superior moisture-wicking and temperature regulation.
Dual-zip system for personalized ventilation control.
Practical chest and secure back pockets for essential storage.

315
OBLIVION GREEN

POLARTEC alpha

TECHNICAL FEATURES

Breathable

Water Repellent

Windproof

134
BEIGE

201
CINNAMOND

TEMPERATURE RANGE
-5 °C / 5 °C (23 °F / 41 °F)

SIZE AVAILABLE
S M L XL XXL 3XL

FIT
Regular

New arrival

SRK SHIFT JACKET

1126518

Master unpredictable rides with Sportful SRK SHIFT Jacket. Polartec® Aircore™ technology for lightweight warmth, breathability, and versatile gravel/road performance.

Polartec® Aircore™: Advanced front insulation for lightweight warmth and superior thermoregulation.
Moisture Management: Breathable polyester back panel to keep you dry during high-intensity efforts.
SRK Design: Versatile regular fit optimized for road, gravel, and long-distance bikepacking.
Smart Storage: Three reinforced rear pockets for secure access to ride essentials and tools.

TECHNICAL FEATURES

Breathable

Water Repellent

Windproof

TEMPERATURE RANGE
5 °C / 15 °C (41 °F / 59 °F)

SIZE AVAILABLE
S M L XL XXL 3XL

FIT
Regular

096
FOGGY STONE

3509
NEON WHISPER

315
OBLIVION GREEN

002
BLACK

801
COPPER BLAZE

New arrival

CLASSIC 2 JACKET

1126502

Classic Protection. Modern Speed.

Windproof winter cycling jacket with full-membrane protection and minimal design.

Full windproof membrane for complete winter protection.
Internal square-pattern structure for lightweight insulation.
Regular fit with clean, minimalist cut.
Reliable comfort for road and gravel winter rides.

3509
NEON WHISPER

096
FOGGY STONE

801
COPPER BLAZE

002
BLACK

TECHNICAL FEATURES

Breathable

Windproof

TEMPERATURE RANGE
-0 °C / 10 °C (32 °F / 50 °F)

SIZE AVAILABLE
S M L XL XXL 3XL

FIT
Regular

FIANDRE AQUA JACKET

1125045

Conquer the Rain, Ride On

Conquer extreme rain with Sportful Fiandre Aqua Jacket. Fully waterproof Polartec fabric, taped seams, and packable design for ultimate cycling protection.

Polartec Protection: Two-layer stretch waterproof fabric for total rain and wind shielding.
Taped Seams: Fully heat-sealed construction with waterproof zipper to keep water out.
Packable Design: Ultra-lightweight and compressible for easy storage in jersey pockets.
Tight Fit: Aerodynamic cut designed for racing and high-performance training.

002

BLACK

TECHNICAL FEATURES

Waterproof

Windproof

Water Repellent

TEMPERATURE RANGE

10 °C / 30 °C (50 °F / 86 °F)

SIZE AVAILABLE

XS S M L XL XXL 3XL

FIT

Slim

AQUA LIGHT JACKET

1125019

Ride Dry, Ride Free with Aqua Light Jacket

Stay dry with Sportful Aqua Light Jacket. Waterproof, breathable, and packable cycling rain shell with taped seams and protection for every ride.

Total Protection: Waterproof fabric with fully taped seams
Smart Ventilation: Waterproof double-slider zipper for easy temperature regulation.
Ultra-Packable: Lightweight, compact construction to fit easily into jersey pockets.
Ergonomic Fit: Stretch fabric designed to adapt perfectly to the cycling position.

3509
NEON WHISPER

002
BLACK

TECHNICAL FEATURES

Waterproof

Windproof

Water Repellent

TEMPERATURE RANGE
10 °C / 30 °C (50 °F / 86 °F)

SIZE AVAILABLE
S M L XL XXL 3XL

FIT
Regular

An error occurred on this page, please send this file to help@

New arrival

FIANDRE 2 BIBTIGHT

1126505

Ride Ready for the Rain.

Pro-level rain-ready bibtight with TC Pro pad and PFAS-free water repellency.

PFAS-free DWR treatment with renewable water-repellent performance
Polypropylene yarn keeps warmth even when the fabric gets wet
TC Pro pad used by pro riders for long-distance comfort
Regular fit ideal for rainy road and gravel sessions

002
BLACK

SEATPAD
TC PRO

TECHNICAL FEATURES

Breathable

Water Repellent

TEMPERATURE RANGE
-0 °C / 10 °C (32 °F / 50 °F)

SIZE AVAILABLE
S M L XL XXL 3XL

FIT
Slim

SUPERNOVA BIBTIGHT

1125501

Ride Longer, Stay Protected.

Durable winter bib tights with pro-level comfort for serious cyclists.

Double-knit fabric with abrasion-resistant polyamide exterior
Quick-drying polyester interior for superior thermoregulation
Raw-cut leg cuffs for optimal comfort and seamless overshoe use
TC Pro chamois for professional-grade support and comfort

125
GUN METAL

SEATPAD
TC PRO

329
SEA MOSS

002
BLACK

TECHNICAL FEATURES

Breathable

Water Repellent

TEMPERATURE RANGE
-0 °C / 10 °C (32 °F / 50 °F)

SIZE AVAILABLE
S M L XL XXL 3XL

FIT
Slim

POC
GRAVEL ONE

New arrival

SUPERGIARA 2 BIBTIGHT

1126506

Carry More. Ride Further.

Gravel bibtight with stretch-woven wind protection and dual cargo mesh pockets.

Stretch-woven front panel with mechanical wind protection.
Two large, durable side mesh cargo pockets.
Tight fit for support and stability on gravel terrain.
DMS gravel Pad

002
BLACK

SEATPAD
DMS

301
BLACK C/COLORE

TECHNICAL FEATURES

Breathable

Windproof

TEMPERATURE RANGE
-0 °C / 10 °C (32 °F / 50 °F)

SIZE AVAILABLE
S M L XL XXL 3XL

FIT
Slim

SRK SHIFT BIBTIGHT

1125510

Adapt to Every Season.

Shop Sportful SRK Shift Bibtight: thermal cycling tights for mild winters. Compact stretch fabric, Bodyfit Pro MD pad, and raw-cut comfort. Perfect mid-season kit.

Mid-Season Warmth: Compact thermal fabric designed for insulation and high breathability.
Bodyfit Pro MD Pad: High-level anatomical support engineered for long-distance road comfort.
Raw-Cut Leg Endings: Seamless finish to prevent pressure points and ensure perfect sock integration.
Pro-Stability Straps: Technical tape straps designed to keep the tight secure during high intensity.

125
GUN METAL

SEATPAD
BODYFIT PRO

TECHNICAL FEATURES

Breathable

002
BLACK

TEMPERATURE RANGE
10 °C / 30 °C (50 °F / 86 °F)

SIZE AVAILABLE
S M L XL XXL 3XL

FIT
Regular

New arrival

SRK SHIFT BIBSHORT

1126507

Shift into Winter Comfort.

Shop Sportful SRK Shift Bibshort: thermal cycling shorts for mid-season road and gravel. Featuring winter-grade fabric and Bodyfit MD pad for total comfort.

Mid-Season Thermal Tech: Winter-grade insulated fabric for superior warmth in cool conditions.
Bodyfit MD Pad: Multi-density cushioning engineered for long-distance road and gravel comfort.
Modular Versatility: Designed to pair perfectly with leg warmers for a flexible seasonal kit.
Pro Tight Fit: Aerodynamic and supportive silhouette for optimal muscle compression.

002
BLACK

SEATPAD
BODYFIT PRO

125
GUN METAL

TECHNICAL FEATURES

Breathable

TEMPERATURE RANGE
10 °C / 30 °C (50 °F / 86 °F)

SIZE AVAILABLE
S M L XL XXL 3XL

FIT
Regular

PULSE BIBTIGHT

1125509

Winter Comfort, All-Ride Performance.

Winter cycling bibtight with soft fabric and Bodyfit Pro MD chamois for comfort.

Soft, brushed fabric for warmth and comfort
High elasticity for maximum freedom of movement
Bodyfit Pro MD chamois for superior support and cushioning
Raw-cut leg cuffs for a seamless, comfortable fit

4012
BLU ASTRO

SEATPAD
BODYFIT PRO

TECHNICAL FEATURES

Breathable

002
BLACK

125
GUN METAL

TEMPERATURE RANGE
5 °C / 15 °C (41 °F / 59 °F)

SIZE AVAILABLE
S M L XL XXL 3XL

FIT
Slim

poc
DT SWISS

New arrival

SUPERGIARA PANT

1126508

Ride Free. Anywhere.

Elevate your gravel adventure with Sportful Supergiara Pant. Technical cycling overshorts combining casual design, performance stretch, and rugged durability.

Stretch Woven Fabric: Durable, flexible material for natural movement and comfort.
Gravel Versatility: Casual aesthetic with high-level technical performance for off-road.
Adjustable Fit: Ankle buttons to secure the hem and prevent chain interference.
Functional Design: Front pockets and regular fit for seamless on-to-off bike transition.

002

BLACK

TECHNICAL FEATURES

Breathable

TEMPERATURE RANGE

10 °C / 30 °C (50 °F / 86 °F)

SIZE AVAILABLE

XS S M L XL XXL 3XL

FIT

Regular

SUPERGIARA 2 OVERSHORT

1126011

Ride Gravel, Stay Casual

Discover Sportful Supergiara 2 Overshort. Durable, quick-dry gravel cycling shorts with 3 pockets and regular fit. Perfect for off-road trails and post-ride.

Gravel packable Fabric: High packable, quick-dry material built for bikepacking and everyday ride.
Smart Storage: Two front pockets plus one secure rear zip pocket for your essentials.
Versatile Fit: Comfortable regular silhouette, ideal alone or paired with technical bibshorts.
Maximum Mobility: Superior stretch construction for unrestricted pedaling on every terrain.

002
BLACK

TECHNICAL FEATURES

Breathable

TEMPERATURE RANGE
15 °C / 35 °C (60 °F / 95 °F)

SIZE AVAILABLE
XXS XS S M L XL XXL

FIT
Regular

New arrival

FIANDRE 2 VEST

1126509

Defy the Elements.

Shop Sportful Fiandre 2 Vest. High-performance cycling gilet with Polartec Aircore technology for wind protection, breathability, and 4-season road versatility.

Polartec Aircore Tech: Advanced wind protection with superior moisture management and breathability.
Double-Slider Zip: Versatile two-way zipper for customized ventilation from top or bottom.
4-Season Versatility: Lightweight, water-repellent construction suitable for all weather conditions.
Functional Storage: Three rear pockets to carry essentials without extra bulk.

096
FOGGY STONE

POLARTEC

TECHNICAL FEATURES

Water Repellent

Windproof

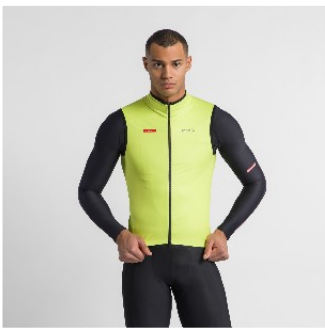

3509
NEON WHISPER

002
BLACK

TEMPERATURE RANGE
5 °C / 15 °C (41 °F / 59 °F)

SIZE AVAILABLE
S M L XL XXL 3XL

FIT
Regular

SUPERGIARA 2 VEST

1125505

Defy the Elements.

Shop Sportful Supergiara 2 Vest: gravel cycling gilet with Polartec Alpha insulation, wind protection, and double zip. Packable performance for every adventure.

Polartec Alpha Insulation: Active warmth and superior thermoregulation in sensitive zones.
Wind &; Water Shield: High-performance barrier against gusts and road or trail spray.
Double-Slider Zip: Flexible ventilation control with top-down or bottom-up opening.
Ultra-Packable Design: Lightweight construction that folds easily into a jersey pocket.

002
BLACK

TECHNICAL FEATURES

Windproof

TEMPERATURE RANGE
-0 °C / 10 °C (32 °F / 50 °F)

SIZE AVAILABLE
S M L XL XXL 3XL

FIT
Regular

PRO 2 VEST

1125020

Elevate your race with the Sportful Pro 2 Vest. Minimalist windproof design, aero stretch fabric, and high breathability. The choice of pro cyclists. Shop now.

Aero Windshield: Mechanical stretch windproof front fabric for a perfect race-ready tight fit.
Max Breathability: Highly ventilated back panel to optimize thermal regulation during efforts.
Pro Functionality: Double-slider YKK® zip and 3 rear pockets for easy access and versatility.
Compact Packability: Ultra-light minimalist construction, easily storable in a jersey pocket.

TECHNICAL FEATURES

Windproof

TEMPERATURE RANGE
10 °C / 30 °C (50 °F / 86 °F)

SIZE AVAILABLE
S M L XL XXL 3XL

FIT
Slim

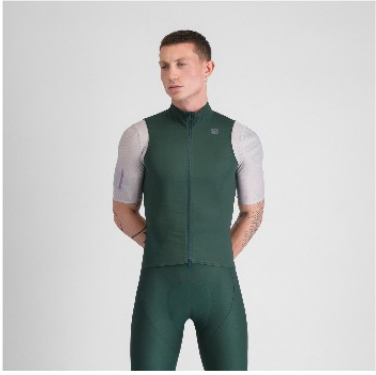

315
OBLIVION GREEN

002
BLACK

067
STONE GRAY

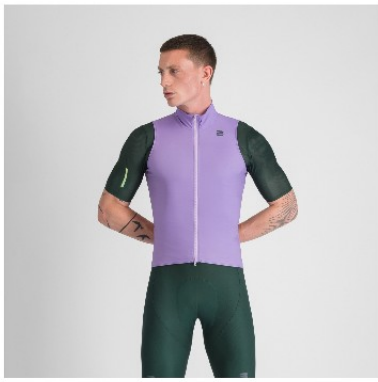

5002
MISTIC VIOLET

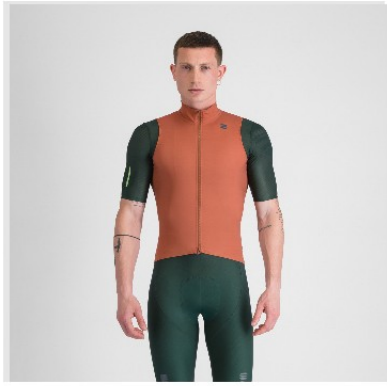

607
SIENNA GLOW

LIGHT AIR VEST

1125029

Ride Light, Ride Free with LIGHT AIR VEST

Shop Sportful Light Air Vest. Ultra-packable windproof cycling gilet for road and gravel. Lightweight design, double-slider zip, and maximum protection.

Ultra-Packable: Incredibly compact design that folds into its own minimal space.
Wind Protection:
High-performance barrier against wind chill for road and gravel.
Double-Slider Zip: Two-way zipper for easy temperature regulation and jersey access.
Featherweight Construction:
Pocketless design to minimize weight and maximize agility.

002

BLACK

3509

NEON WHISPER

TECHNICAL FEATURES

Windproof

Water Repellent

TEMPERATURE RANGE

10 °C / 30 °C (50 °F / 86 °F)

SIZE AVAILABLE

S M L XL XXL 3XL

FIT

Regular

SUPERGIARA WOOL JERSEY

1125504

Comfort Meets Performance.

Long-sleeve gravel cycling jersey with 40% merino wool for warmth and breathability.

40% merino wool blend with Techwool for warmth and comfort.
Excellent thermal regulation and breathability.
Quick-drying polyester for durability and moisture management.
Regular fit for comfort during long gravel rides.

294
SAND

002
BLACK

TECHNICAL FEATURES

Breathable

TEMPERATURE RANGE
-0 °C / 10 °C (32 °F / 50 °F)

SIZE AVAILABLE
S M L XL XXL 3XL

FIT
Regular

DT SWISS

GARMIN

SUPERNOVA THERMAL JERSEY

1125547

Embrace Winter, Unleash Performance.

High-performance winter cycling jersey with superior fit and warmth.

Race fit for an aerodynamic, performance-driven profile
High-stretch polyester for a close yet adaptable fit
Quick-drying properties for superior moisture management
Inspired by the Supernova summer collection's graphic design

067
STONE GREY

TECHNICAL FEATURES

Breathable

002
BLACK

352
SMOKY EMERALD

TEMPERATURE RANGE
5 °C / 15 °C (41 °F / 59 °F)

SIZE AVAILABLE
S M L XL XXL 3XL

FIT
Slim

New arrival

SRK 2 THERMAL JERSEY

1126510

Thermal long-sleeve cycling jersey with soft stretch comfort and smart pocket design.

Soft brushed polyester with a light peached feel for cozy comfort
Stretch construction and clean armhole cut for a natural, minimal fit
Three rear pockets plus secure zip pocket for essentials
Regular fit ideal for road and gravel thermal layering

TECHNICAL FEATURES

Breathable

TEMPERATURE RANGE
10 °C / 30 °C (50 °F / 86 °F)

SIZE AVAILABLE
S M L XL XXL 3XL

FIT
Regular

315
OBLIVION GREEN

801
COPPER BLAZE

002
BLACK

3509
NEON WHISPER

PINARELLO

CLASSIC THERMAL JERSEY

1125507

Classic Warmth, Modern Performance.

Versatile winter cycling jersey with warmth, quick-drying, and comfort.

100% polyester fabric for softness and quick-drying comfort
Thermal insulation suitable for mid-season and mild winter rides
Regular fit for freedom of movement and layering options
Classic line design with modern performance features

352
SMOKY EMERALD

002
BLACK

5003
PHOENIX GLOW

TECHNICAL FEATURES

Breathable

TEMPERATURE RANGE
5 °C / 15 °C (41 °F / 59 °F)

SIZE AVAILABLE
S M L XL XXL 3XL

FIT
Regular

New arrival

ALPHA® VEST

1126512

Layer Smart. Ride Strong.

Next-level thermal vest with Polartec Alpha insulation for road &;amp; gravel cycling.

Polartec Alpha™ insulation for dynamic warmth and high breathability
Full-length front zipper for adaptable ventilation and layering
Regular fit designed for both road and gravel cycling
Lightweight, compressible design ideal for variable conditions

850

CYBERFLARE

TECHNICAL FEATURES

Breathable

TEMPERATURE RANGE

-0 °C / 10 °C (32 °F / 50 °F)

SIZE AVAILABLE

S M L XL XXL 3XL

FIT

Regular

sportfu
GARMIN

MERINO LAYER TEE LONG SLEEVES

1125514

Warmth That Rides With You.

Master any season with Sportful Merino Layer Tee LS. Techwool technology combines natural merino warmth and synthetic durability for elite cycling performance.

Techwool Blend: Premium mix of merino wool and polyamide for warmth and durability.
Natural Insulation: Regulates body temperature effectively in cold and damp conditions.
Quick-Dry Tech:
High-performance moisture wicking to keep skin dry under intensity.
Second-Skin Fit: Lightweight long-sleeve design for perfect layering and comfort.

002

BLACK

TECHNICAL FEATURES

Breathable

TEMPERATURE RANGE

5 °C / 15 °C (41 °F / 59 °F)

SIZE AVAILABLE

XS S M L XL XXL 3XL

FIT

Regular

MERINO LAYER TEE

1125513

Ride in Ultimate Comfort

Experience premium comfort with Sportful Merino Layer Tee. Techwool technology combines merino warmth and polyamide durability for elite cycling performance.

Techwool Technology: Premium blend of merino wool and polyamide for warmth and durability.
Natural Thermoregulation: Maintains optimal body temperature in varying weather conditions.
Moisture Management: Fast-drying fabric that stays insulating even when wet.
Ergonomic Fit: Lightweight, second-skin feel designed for maximum cycling comfort.

002
BLACK

TECHNICAL FEATURES

Breathable

TEMPERATURE RANGE
5 °C / 15 °C (41 °F / 59 °F)

SIZE AVAILABLE
XS S M L XL XXL 3XL

FIT
Regular

WINTER LAYER TEE LONG SLEEVE

1125515

Warmth That Drives Performance

Master winter rides with Sportful Winter Layer Tee LS. Ribbed thermal fabric for superior insulation, moisture management, and breathable cold-weather comfort.

Thermal Ribbed Knit: Advanced structure for superior heat retention and insulation.
Pro Moisture Wicking: High-performance polyester for rapid sweat evaporation.
Ergonomic Layering: Lightweight long-sleeve design that fits perfectly under jackets.
Climate Balance: Breathable fabric to regulate body temperature during intense rides.

002

BLACK

TECHNICAL FEATURES

Breathable

TEMPERATURE RANGE

5 °C / 15 °C (41 °F / 59 °F)

SIZE AVAILABLE

XS S M L XL XXL 3XL

FIT

Regular

WINTER LAYER TEE

1125511

Stay Warm, Ride Strong.

Keep warm with Sportful Winter Layer Tee. Ribbed technical base layer for thermal insulation and superior moisture management during cold-weather cycling.

Thermal Ribbed Knit: Advanced structure designed to trap body heat and insulate.
Pro Moisture Wicking: High-performance polyester for rapid sweat evaporation.
Seamless Layering: Slim, low-bulk design that fits perfectly under winter jackets.
Cold-Weather Versatility: Ideal for high-intensity training and long endurance rides.

002
BLACK

TECHNICAL FEATURES

Breathable

TEMPERATURE RANGE
5 °C / 15 °C (41 °F / 59 °F)

SIZE AVAILABLE
XS S M L XL XXL 3XL

FIT
Regular

PRO BASELAYER TEE

1125040

Stay Cool, Ride Strong

Optimize your ride with Sportful Pro Baselayer Tee. Ribbed fabric for elite moisture management, high stretch, and maximum breathability for road and gravel.

Ribbed Fabric: Advanced texture for superior moisture wicking and airflow.
High Elasticity: Ensures a supportive, non-restrictive fit for all-day comfort.
Versatile Use: Optimized for road racing, gravel adventures, and training.
Ergonomic Cut: Short-sleeve design for perfect layering under cycling jerseys.

101
WHITE

TECHNICAL FEATURES

Breathable

TEMPERATURE RANGE
10 °C / 30 °C (50 °F / 86 °F)

SIZE AVAILABLE
XXS XS S M L XL XXL 3XL

FIT
Regular

PRO BASELAYER SLEEVELESS

1125039

Stay Cool, Ride Strong

Elevate performance with Sportful Pro Baselayer Sleeveless. Ribbed fabric for superior moisture management, high stretch, and maximum breathability on the bike.

Ribbed Fabric: Advanced texture for accelerated moisture wicking and airflow.
High Elasticity: Ensures a supportive, non-restrictive fit for all body types.
Versatile Performance: Ideal for road, gravel, and high-intensity training sessions.
Discreet Comfort: Low-profile seams and sleeveless cut for seamless layering.

101
WHITE

TECHNICAL FEATURES

Breathable

TEMPERATURE RANGE
10 °C / 30 °C (50 °F / 86 °F)

SIZE AVAILABLE
XXS XS S M L XL XXL 3XL

FIT
Regular

New arrival

LIGHT MESH SLEEVELESS

1126013

Ride Cool, Stay Dry

Stay cool with Sportful Light Mesh Sleeveless.
High-breathability cycling base layer in polypropylene mesh for superior moisture management on road and gravel.

Polypropylene Mesh: High-tech open structure for rapid moisture wicking and drying.
Invisible Fit: Deep neckline and ergonomic armholes for a seamless look under jerseys.
Ultralight Comfort: Minimalist design providing a "second-skin" feel without added bulk.
Climate Control: Engineered to stabilize body temperature during intense summer rides.

101
WHITE

TECHNICAL FEATURES

Breathable

TEMPERATURE RANGE
15 °C / 35 °C (60 °F / 95 °F)

SIZE AVAILABLE
S/M LXL XXL

FIT
Regular

CYCLING UNDERSHORT

1122047

COMFORTABLE AND ALWAYS WITH YOU.

Upgrade your ride with Sportful Cycling Undershorts. Breathable mesh base layer featuring the Bodyfit Pro MD seat pad for ultimate comfort under any overshort.

Bodyfit Pro MD Pad:
Multi-density seat pad for versatile, long-distance comfort.
High Breathability: Lightweight technical mesh for superior sweat management.
Overshort Compatible: Slim profile designed to fit perfectly under casual or baggy shorts.
Anatomic Fit: Stretch construction that follows every pedal stroke without friction.

002
BLACK

SEATPAD
BODYFIT PRO

TECHNICAL FEATURES

Breathable

TEMPERATURE RANGE
10 °C / 30 °C (50 °F / 86 °F)

SIZE AVAILABLE
XS S M L XL XXL 3XL

FIT
Regular

sportful

ACCESS

ORIES

DEEP WINTER GLOVES

1125532

Winter cycling gloves with Primaloft insulation and touch-screen compatibility

002
BLACK

Primaloft insulation for superior warmth and moisture management
Weatherproof outer membrane for wind and light rain protection
Velcro closure for a snug, adjustable fit
Touch-screen compatible index finger and thumb

TEMPERATURE RANGE -5 °C / 5 °C (23 °F / 41 °F)

SIZE AVAILABLE XS S M L XL XXL

FIT Regular

TECHNICAL FEATURES

Breathable

Water Repellent

Windproof

New arrival

AIRCORE GLOVES

1126513

Warm, breathable cycling gloves with Polartec Aircore and strategic grip zones.

002
BLACK

Polartec Aircore™ for warm, breathable winter protection
Strategic padding and grip zones for control on cold road and gravel rides
Touch-compatible thumb and index finger for device use
Regular fit for comfort, dexterity and precise handling

TEMPERATURE RANGE -0 °C / 10 °C (32 °F / 50 °F)

SIZE AVAILABLE XS S M L XL XXL

FIT Regular

TECHNICAL FEATURES

Breathable

Water Repellent

Windproof

WINTER GLOVES

1125533

Winter cycling gloves with 3D palm for comfort, windproof back, and touch compatibility

002
BLACK

3D-constructed palm for maximum comfort and superior grip
Windproof back for light protection against the elements
Touch-screen compatible index finger and thumb

TEMPERATURE RANGE -0 °C / 10 °C (32 °F / 50 °F)

SIZE AVAILABLE XS S M L XL XXL

FIT Regular

TECHNICAL FEATURES

Breathable

Water Repellent

Windproof

CLASSIC WINTER GLOVES

1125536

Winter cycling gloves with grip, touch-screen fingers, and thermal comfort

002
BLACK

Comfortable palm with strategic grip for excellent handlebar control
Elastic fabric back with brushed interior for thermal comfort
Touch-screen compatible index finger and thumb

TEMPERATURE RANGE 5 °C / 15 °C (41 °F / 59 °F)

SIZE AVAILABLE XS S M L XL XXL

FIT Regular

TECHNICAL FEATURES

Breathable

AQUA LIGHT GLOVES

1125534

Ride with confidence in variable weather with Sportful Aqua Light Gloves. Water-repellent, windproof, and breathable long-finger gloves for cycling.

002
BLACK

Water-Repellent Membrane: Reliable protection against light rain and damp conditions.
Lightweight &; Breathable: Ideal for transitional seasons and high-intensity riding.
Superior Grip: Technical palm construction for maximum control and handlebar feel.
Packable Design: Compact enough to fit easily into a jersey pocket when not in use.

TEMPERATURE RANGE 10 °C / 30 °C (50 °F / 86 °F)

SIZE AVAILABLE XS S M L XL XXL

FIT Regular

TECHNICAL FEATURES

Water Repellent

Windproof

DEEP WINTER SHOE COVER

1125537

Winter cycling shoe covers with Primaloft insulation and windproof protection

002
BLACK

Windproof membrane for protection against cold and wet conditions
Primaloft insulation for superior warmth and moisture management
Velcro closure for easy wear and removal
Durable lower section for long-lasting performance

TEMPERATURE RANGE -5 °C / 5 °C (23 °F / 41 °F)

SIZE AVAILABLE S M L XL XXL

FIT Regular

TECHNICAL FEATURES

Breathable

Water Repellent

Windproof

New arrival

AIRCORE SHOE COVER

1126527

Warm, breathable Polartec Aircore shoe covers with wind &;amp; rain protection.

002
BLACK

Polartec Aircore™ warmth with high breathability for winter rides
Wind &; rain protection up to 5,000 mm water column
Tear-resistant undersole with velcro adjustment for secure fit
Rear full-zip for easy on/off and stable regular-fit design

TEMPERATURE RANGE -0 °C / 10 °C (32 °F / 50 °F)

SIZE AVAILABLE S M L XL XXL

FIT Regular

TECHNICAL FEATURES

Breathable

Waterproof

Water Repellent

Windproof

WINTER SHOE COVER

1125538

Windproof winter cycling shoe covers for warmth and wet-road protection

002
BLACK

Windproof membrane for protection against cold and road spray
Optimal weight for full winter use
Easy-to-use Velcro closure for simple fitting and removal
Durable lower fabric for long-lasting wear

TEMPERATURE RANGE -0 °C / 10 °C (32 °F / 50 °F)

SIZE AVAILABLE S M L XL XXL

FIT Regular

TECHNICAL FEATURES

Breathable

Water Repellent

Windproof

AQUA SHOE COVER

1125539

Ride dry with Sportful Aqua Shoe Covers. Fully waterproof membrane, taped seams, and a durable design for road, MTB, and gravel cycling in any weather.

002
BLACK

Total Waterproofing: High-tech membrane and taped seams for maximum rain protection.
Waterproof Zipper: Sealed closure system to prevent any moisture infiltration.
Multi-Terrain Durability: High-resistance bottom fabric designed for road, MTB, and gravel.
Easy Fit: Velcro under-sole opening for quick entry and a secure, regular fit.

TEMPERATURE RANGE 10 °C / 30 °C (50 °F / 86 °F)

SIZE AVAILABLE S M L XL XXL

FIT Regular

TECHNICAL FEATURES

Water Repellent

Windproof

Waterproof

ESSENTIAL TOE COVER

1125530

Protect your feet with Sportful Essential Toe Cover. Lightweight, windproof cycling toe covers for road, MTB, and gravel. Perfect for cool-weather rides.

002
BLACK

Wind Protection: Targeted windproof shield for toes in cool weather conditions.
Universal Fit: Versatile design compatible with road, MTB, and gravel footwear.
Rugged Durability: Abrasion-resistant bottom fabric for long-lasting frequent use.
Ultra-Packable: Lightweight and compact to fit easily into any jersey pocket.

TEMPERATURE RANGE 10 °C / 30 °C (50 °F / 86 °F)

SIZE AVAILABLE UNI

FIT Regular

TECHNICAL FEATURES

Windproof

WINTER CAP

1125541

Winter cycling cap with warm, breathable fabric and windproof front for full protection.

002
BLACK

Warm, fleeced fabric for optimal insulation.
Windproof front panel for effective cold protection.
Ear coverage with foldable flaps for adjustable comfort.
Built-in visor for added eye protection and style.

TEMPERATURE RANGE 5 °C / 15 °C (41 °F / 59 °F)

SIZE AVAILABLE UNI

FIT Regular

TECHNICAL FEATURES

Breathable

Windproof

New arrival

AQUA LIGHT CYCLING CAP

1126017

Stay dry with Sportful Aqua Light Cycling Cap. Waterproof membrane, taped seams, and high breathability. The ultimate cycling hat for rain, road, and gravel.

002
BLACK

Waterproof Membrane: Total shield against rain and wind for high-performance rides.
Fully Taped Seams: Advanced construction to prevent water infiltration during downpours.
Under-Helmet Fit: Lightweight, elastic fabric for maximum comfort and aerodynamics.
Fast-Drying Tech: High-wicking material that won't soak or retain humidity.

TEMPERATURE RANGE 10 °C / 30 °C (50 °F / 86 °F)

SIZE AVAILABLE UNI

FIT Regular

TECHNICAL FEATURES

Waterproof

Water Repellent

Windproof

SRK CAP

1124527

The SRK Cap is a cycling underhelmet to keep you warm and cozy while winter riding in your SRK outfit. The brushed fabric used ensures maximum heat retention and is comfortable on the skin even in case of excessive sweat.

Brushed stretch fabric
Embossed logo on the side
Raw-cut edge

057
COOL ALLOY

002
BLACK

TEMPERATURE RANGE 5 °C / 15 °C (41 °F / 59 °F)

SIZE AVAILABLE UNI

FIT Regular

TECHNICAL FEATURES

Breathable

SRK HEADBAND

1124528

The SRK Headband is a great alternative to the SRK cap, providing better wearability with a pony tail or long hair in general. The brushed fabric used ensures maximum heat retention and is comfortable on the skin even in case of excessive sweat.

Brushed stretch fabric
Embossed logo on the side
Raw-cut edges

002
BLACK

057
COOL ALLOY

388
LUNAR LEMON

TEMPERATURE RANGE 5 °C / 15 °C (41 °F / 59 °F)

SIZE AVAILABLE UNI

FIT Regular

TECHNICAL FEATURES

Breathable

New arrival

CLASSIC NECKWARMER

1126033

Stay protected with Sportful Classic Neckwarmer.
Lightweight, breathable cycling neck gaiter for road and gravel.
Versatile comfort for shifting weather.

105
CREAM

002
BLACK

Versatile Protection: Lightweight shield against wind and cold for road and gravel.
Pro Breathability: High-wicking technical fabric for optimal temperature regulation.
Ultra-Packable: Compact design that fits easily into any cycling jersey pocket.
Soft-Touch Comfort: Ergonomic, non-irritating fit designed for long-distance rides.

TEMPERATURE RANGE 5 °C / 15 °C (41 °F / 59 °F)

SIZE AVAILABLE UNI

FIT Regular

TECHNICAL FEATURES

Breathable

New arrival

WINTER NECKWARMER

1126514

3D-grid winter neckwarmer for warm, breathable protection on cold road and gravel rides.

002
BLACK

087
LUNAR ROCK

3D grid-structured fabric for warm, breathable insulation
Ergonomic shaped fit for stable winter protection
Lightweight construction ideal for road and gravel rides
Moisture-control performance to avoid cold, damp discomfort

TEMPERATURE RANGE -0 °C / 10 °C (32 °F / 50 °F)

SIZE AVAILABLE UNI

FIT Regular

TECHNICAL FEATURES

Breathable

WINTER ARMWARMES

1126515

Defy the cold with Sportful Winter Armwarmers.
High-stretch brushed thermal fabric for superior warmth, moisture management, and a perfect ergonomic fit.

002
BLACK

Brushed Thermal Fabric: Soft fleeced interior for maximum heat retention and comfort.
Pro Moisture Wicking: Technical fibers designed for rapid sweat evaporation.
Anatomic Construction: Ergonomic fit that stays in place during every pedal stroke.
Easy Layering: Lightweight and highly packable for versatile weather protection.

TEMPERATURE RANGE 5 °C / 15 °C (41 °F / 59 °F)

SIZE AVAILABLE S M L XL

FIT Regular

TECHNICAL FEATURES

Breathable

WINTER LEGWARMERS

1126516

Keep riding with Sportful Winter Legwarmers. High-stretch brushed thermal fabric for maximum warmth, moisture management, and a perfect ergonomic fit.

002
BLACK

Brushed Thermal Fabric: High-stretch fleeced interior for maximum heat retention.
Anatomic Construction: Ergonomic cut designed to stay in place without bunching.
Pro Moisture Wicking: Advanced fibers for superior sweat management during intensity.
Easy Packing: Lightweight design that stows perfectly in a cycling jersey pocket.

TEMPERATURE RANGE 5 °C / 15 °C (41 °F / 59 °F)

SIZE AVAILABLE S M L XL

FIT Regular

TECHNICAL FEATURES

Breathable

WINTER KNEEWARMERS

1126517

Protect your joints with Sportful Winter Kneewarmers.
High-stretch thermal fabric with brushed lining for targeted warmth, breathability, and elite cycling fit.

002
BLACK

Brushed Thermal Lining:
Premium fleeced interior for optimal heat retention and comfort.
Ergonomic Knee Flex: Anatomic shaping designed to follow every pedal stroke without slipping.
Pro Moisture Control:
High-wicking technical fibers to keep skin dry under intensity.
Lightweight &; Packable:
Minimalist construction for easy storage in jersey pockets.

TEMPERATURE RANGE 5 °C / 15 °C (41 °F / 59 °F)

SIZE AVAILABLE S M L XL

FIT Regular

TECHNICAL FEATURES

Breathable

SUPERGIARA 2 WINTER SOCKS

1126531

Wool-blend gravel socks with ribbed structure for warm, stable comfort on winter rides.

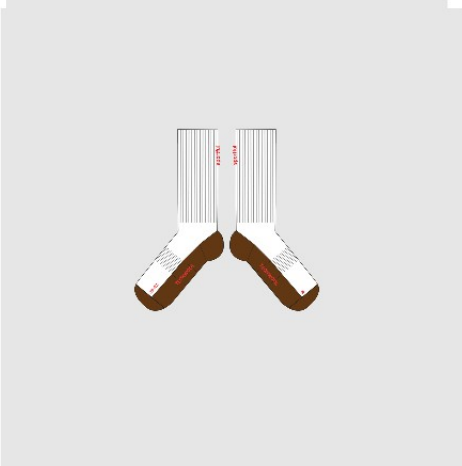

101
WHITE

527
GALACTIC PURPLE

002
BLACK

Wool-blend yarn for warm, breathable winter performance
Ribbed leg structure for stability and authentic gravel style
Tight, supportive fit for long off-road rides
Natural moisture control for dry, comfortable feet

TEMPERATURE RANGE 5 °C / 15 °C (41 °F / 59 °F)

SIZE AVAILABLE S M L

FIT Regular

TECHNICAL FEATURES

Breathable

PRO 2 WINTER SOCKS

1126530

Light Primaloft cycling socks for warm, breathable performance on road and gravel rides.

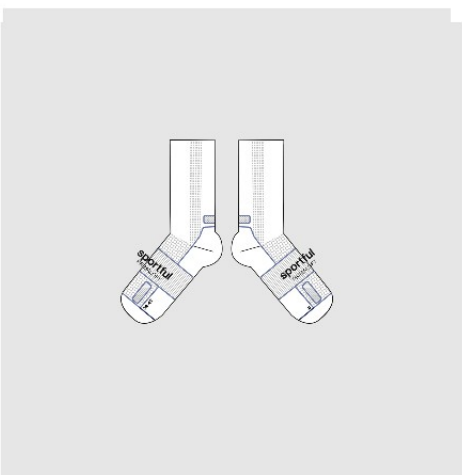

101
WHITE

002
BLACK

Lightweight Primaloft yarn for warm, breathable insulation
Thin, soft construction for a precise cycling-shoe fit
Tight, stable design ideal for road and gravel riding
Moisture-management performance for dry, comfortable feet

TEMPERATURE RANGE 5 °C / 15 °C (41 °F / 59 °F)

SIZE AVAILABLE S M L

FIT Regular

TECHNICAL FEATURES

Breathable

CLASSIC 2 MERINO SOCKS

1126532

Merino cycling socks warm, soft and breathable for daily road and gravel winter rides.

002
BLACK

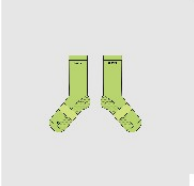

3509
NEON WHISPER

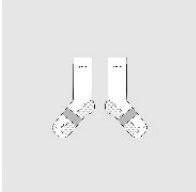

101
WHITE

Merino-wool blend for warm, breathable winter performance
Smooth, lightweight construction for daily comfort
Tight, stable fit ideal for road and gravel riding
Natural moisture control for dry, comfortable feet

TEMPERATURE RANGE 5 °C / 15 °C (41 °F / 59 °F)

SIZE AVAILABLE S M L

FIT Regular

TECHNICAL FEATURES

Breathable

ESSENTIAL ARM WARMERS

1125548

Ride in comfort with Sportful Essential Arm Warmers. Seamless, high-stretch construction for perfect thermal regulation and moisture management on every ride.

002
BLACK

Seamless Construction: Tubular design to eliminate chafing and maximize skin comfort.
Thermal Balance: Lightweight insulation perfect for mid-season and variable weather.
High-Stretch Fit: Elasticized fabric for a secure, ergonomic, and flexible feel.
Packable Design:
Ultra-lightweight structure that easily stows in any jersey pocket.

TEMPERATURE RANGE 10 °C / 30 °C (50 °F / 86 °F)

SIZE AVAILABLE S/M L/X

FIT Regular

TECHNICAL FEATURES

Breathable

ESSENTIAL LEG WARMERS

1125549

Master every climb with Sportful Essential Leg Warmers. Seamless, high-stretch construction for perfect thermal regulation and moisture management on the bike.

002
BLACK

Seamless Construction: Tubular design to eliminate chafing and maximize skin comfort.
Thermal Protection: Balanced insulation ideal for transition seasons and alpine climbs.
High-Stretch Fit: Elasticized fabric for a secure, ergonomic, and full range of motion.
Pro Packability: Ultra-lightweight structure that easily stows in any cycling jersey pocket.

TEMPERATURE RANGE 10 °C / 30 °C (50 °F / 86 °F)

SIZE AVAILABLE S/M L/X

FIT Regular

TECHNICAL FEATURES

Breathable

ESSENTIAL KNEE WARMERS

1125550

Protect your knees with Sportful Essential Knee Warmers. Seamless, high-stretch cycling gear for perfect thermal regulation and moisture management.

002
BLACK

Seamless Construction: Tubular design to eliminate chafing and maximize joint comfort.
Thermal Protection: Balanced insulation ideal for transition seasons and alpine rides.
High-Stretch Fit: Elasticized fabric for a secure, ergonomic, and full range of motion.
Pro Packability: Ultra-lightweight structure that easily stows in any cycling jersey pocket.

TEMPERATURE RANGE 10 °C / 30 °C (50 °F / 86 °F)

SIZE AVAILABLE S/M L/X

FIT Regular

TECHNICAL FEATURES

Breathable

GAZZETTA SHIFT

1125546

Revolutionize your descents with Sportful Gazzetta Shift. Windproof cycling shield with Polartec Alpha insulation. Lightweight, packable, and high-performance.

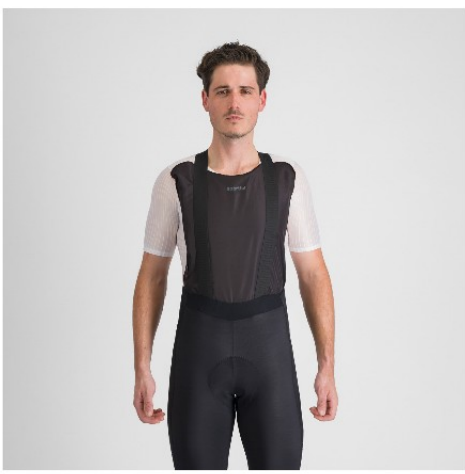

002
BLACK

Polartec Alpha: Active insulation for extreme warmth and rapid sweat management.
Windproof Shield:
High-performance outer layer to block cold air on descents.
Ultra-Packable: Minimalist design that compresses easily into any jersey pocket.
Modern Heritage: Technical evolution of traditional protection for all cycling types.

TEMPERATURE RANGE 5 °C / 15 °C (41 °F / 59 °F)

SIZE AVAILABLE UNI

FIT Regular

TECHNICAL FEATURES

Windproof

sportful

WOMAN

FIANDRE 2 W JACKET

1125516

Unmatched Winter Performance.

Winter cycling jacket with exclusive Polartec AirCore for breathability and protection.

Exclusive Polartec AirCore membrane for superior breathability and protection. Wind becomes an ally with effective windproofing design. PFAS-free for sustainable, eco-friendly performance. Object retention technology for secure pocket storage.

096
FOGGY STONE

POLARTEC AirCore

TECHNICAL FEATURES

Breathable

Water Repellent

Windproof

Waterproof

117
POMPELMO

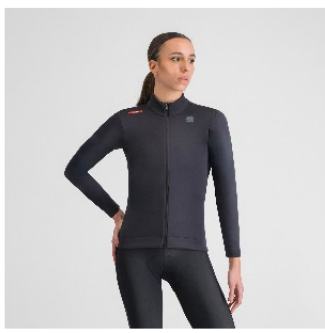

002
BLACK

TEMPERATURE RANGE
-0 °C / 10 °C (32 °F / 50 °F)

SIZE AVAILABLE
XS S M L XL XXL

FIT
Regular

FIANDRE SHIFT W JACKET

1125518

Adapt to Every Shift.

Ride through unpredictable weather with Sportful FIANDRE SHIFT W JACKET. Features Polartec AirCore membrane for superior breathability and wind protection.

Polartec AirCore: Exclusive membrane for superior breathability and wind control.
Weather Protection:
Water-resistant fabric ideal for light rain and shifting conditions.
Secure Storage: Rear pockets with retention technology for rough terrains.

294
SAND

POLARTEC

TECHNICAL FEATURES

Breathable

Water Repellent

Windproof

527
GALACTIC PURPLE

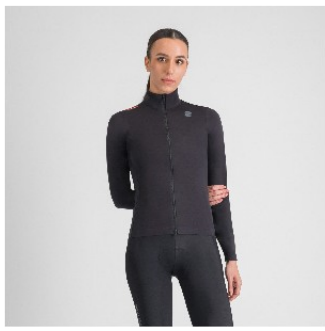

002
BLACK

TEMPERATURE RANGE
5 °C / 15 °C (41 °F / 59 °F)

SIZE AVAILABLE
XS S M L XL XXL

FIT
Regular

SUPERGIARA 2 W JACKET

1125519

Dual-Layer Warmth, Unmatched Comfort.

Dual-layer cycling jacket with Polartec Alpha for warmth, breathability, and weather protection.

Dual-layer design with outer membrane and Polartec Alpha for warmth and breathability.
Superior moisture-wicking and temperature regulation.
Dual-zip system for personalized ventilation control.
Practical chest and secure back pockets for essential storage.

315
OBLIVION GREEN

POLARTEC alpha

134
BEIGE

TECHNICAL FEATURES

Breathable

Water Repellent

Windproof

TEMPERATURE RANGE
-5 °C / 5 °C (23 °F / 41 °F)

SIZE AVAILABLE
XS S M L XL XXL

FIT
Regular

New arrival

SRK 2 W JACKET

1126529

Born to Breathe. Built to Ride.

High-breathability winter cycling jacket with Polartec Aircore protection.

Polartec Aircore windproof and water-repellent membrane (5,000 mm).
High-breathability thermal back panel for moisture release.
Regular fit designed for road and gravel winter riding.
Three rear pockets for essential storage.

3508
URBAN SAGE

POLARTEC Aircore™

TECHNICAL FEATURES

Breathable

Water Repellent

Windproof

002
BLACK

117
POMPELMO

TEMPERATURE RANGE
-0 °C / 10 °C (32 °F / 50 °F)

SIZE AVAILABLE
XS S M L XL XXL

FIT
Regular

New arrival

SRK SHIFT W JACKET

1126520

Shift Into SRK

Master unpredictable rides with Sportful SRK SHIFT W JACKET. Polartec® Aircore™ technology for lightweight warmth, breathability, and versatile gravel/road performance.

Polartec® Aircore™: Advanced front insulation for lightweight warmth and superior thermoregulation.
Moisture Management: Breathable polyester back panel to keep you dry during high-intensity efforts.
SRK Design: Versatile regular fit optimized for road, gravel, and long-distance bikepacking.
Smart Storage: Three reinforced rear pockets for secure access to ride essentials and tools.

527
GALACTIC PURPLE

POLARTEC

TECHNICAL FEATURES

Breathable

Water Repellent

Windproof

294
SAND

002
BLACK

TEMPERATURE RANGE
5 °C / 15 °C (41 °F / 59 °F)

SIZE AVAILABLE
XS S M L XL XXL

FIT
Regular

New arrival

CLASSIC 2 W JACKET

1126519

Classic Protection. Modern Speed.

Windproof winter cycling jacket with full-membrane protection and minimal design.

Full windproof membrane for complete winter protection.
Internal square-pattern structure for lightweight insulation.
Regular fit with clean, minimalist cut.
Reliable comfort for road and gravel winter rides.

096
FOGGY STONE

TECHNICAL FEATURES

Breathable

Windproof

527
GALACTIC PURPLE

002
BLACK

TEMPERATURE RANGE
-0 °C / 10 °C (32 °F / 50 °F)

SIZE AVAILABLE
XS S M L XL XXL

FIT
Regular

FIANDRE W AQUA JACKET

1125046

Conquer the Rain, Ride On

Conquer extreme rain with Sportful FIANDRE W AQUA JACKET. Fully waterproof Polartec fabric, taped seams, and packable design for ultimate cycling protection.

Polartec Protection: Two-layer stretch waterproof fabric for total rain and wind shielding.
Taped Seams: Fully heat-sealed construction with waterproof zipper to keep water out.
Packable Design:
Ultra-lightweight and compressible for easy storage in jersey pockets.
Tight Fit: Aerodynamic cut designed for racing and high-performance training.

002

BLACK

TECHNICAL FEATURES

Waterproof

Windproof

Water Repellent

TEMPERATURE RANGE

10 °C / 30 °C (50 °F / 86 °F)

SIZE AVAILABLE

XS S M L XL XXL

FIT

Slim

AQUA LIGHT W JACKET

1125021

Ride Dry, Ride Free with Aqua Light Jacket

Stay dry with Sportful AQUA LIGHT W JACKET. Waterproof, breathable, and packable cycling rain shell with taped seams and protection for every ride.

Total Protection: Waterproof fabric with fully taped seams
Smart Ventilation: Waterproof double-slider zipper for easy temperature regulation.
Ultra-Packable: Lightweight, compact construction to fit easily into jersey pockets.
Ergonomic Fit: Stretch fabric designed to adapt perfectly to the cycling position.

002
BLACK

3509
NEON WHISPER

TECHNICAL FEATURES

Waterproof

Windproof

Water Repellent

TEMPERATURE RANGE
10 °C / 30 °C (50 °F / 86 °F)

SIZE AVAILABLE
XS S M L XL XXL

FIT
Regular

New arrival

DEEPWINTER W BIBTIGHT

1126521

Defy the Deep Cold.

Winter cycling bibtight with Polartec Aircore wind protection for extreme cold.

Polartec Aircore front membrane for wind and moisture protection.
Warm, breathable thermal fabrics for deep-winter insulation.
Regular fit with ergonomic bib-strap construction.
Built for road and gravel riding in extreme cold.

002

BLACK

POLARTEC Aircore

SEATPAD
BODYFIT PRO W

TECHNICAL FEATURES

Breathable

Water Repellent

Windproof

TEMPERATURE RANGE
-5 °C / 5 °C (23 °F / 41 °F)

SIZE AVAILABLE
XS S M L XL XXL

FIT
Slim

New arrival

FIANDRE 2 W BIBTIGHT

1126522

Ride Ready for the Rain.

Pro-level rain-ready bibtight with TC Pro pad and PFAS-free water repellency.

PFAS-free DWR treatment with renewable water-repellent performance
Polypropylene yarn keeps warmth even when the fabric gets wet
TC Pro pad used by pro riders for long-distance comfort
Regular fit ideal for rainy road and gravel sessions

002
BLACK

SEATPAD
TC PRO W

TECHNICAL FEATURES

Breathable

Water Repellent

TEMPERATURE RANGE
-0 °C / 10 °C (32 °F / 50 °F)

SIZE AVAILABLE
XS S M L XL XXL

FIT
Slim

SUPERNOVA W BIBTIGHT

1125512

Ride Longer, Stay Protected.

Durable winter bib tights with pro-level comfort for serious cyclists.

Double-knit fabric with abrasion-resistant polyamide exterior
Quick-drying polyester interior for superior thermoregulation
Raw-cut leg cuffs for optimal comfort and seamless overshoe use
TC Pro chamois for professional-grade support and comfort

125
GUN METAL

SEATPAD
TC PRO W

TECHNICAL FEATURES

Breathable

Water Repellent

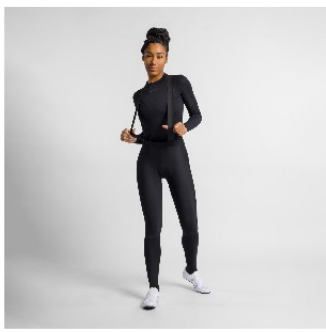

002
BLACK

TEMPERATURE RANGE
-0 °C / 10 °C (32 °F / 50 °F)

SIZE AVAILABLE
XS S M L XL XXL

FIT
Slim

KASK
DT SWISS
DT SWISS

Tiranda
Hostal
Restaurant
Can Tiranda
desde 1923
Cervélo

New arrival

SUPERGIARA 2 W BIBTIGHT

1126523

Carry More. Ride Further.

Gravel bibtight with stretch-woven wind protection and dual cargo mesh pockets.

Stretch-woven front panel with mechanical wind protection.
Two large, durable side mesh cargo pockets.
Tight fit for support and stability on gravel terrain.
DMS gravel Pad

002
BLACK

SEATPAD
DMS W

513
BLACK METRO PURPLE

TECHNICAL FEATURES

Breathable

Windproof

TEMPERATURE RANGE
-0 °C / 10 °C (32 °F / 50 °F)

SIZE AVAILABLE
XS S M L XL XXL

FIT
Slim

SRK SHIFT W BIBTIGHT

1125526

Adapt to Every Season.

Shop Sportful SRK SHIFT W BIBTIGHT: thermal cycling tights for mild winters. Compact stretch fabric, Bodyfit Pro MD pad, and raw-cut comfort. Perfect mid-season kit.

Mid-Season Warmth: Compact thermal fabric designed for insulation and high breathability.
Bodyfit Pro MD Pad: High-level anatomical support engineered for long-distance road comfort.
Raw-Cut Leg Endings: Seamless finish to prevent pressure points and ensure perfect sock integration.
Pro-Stability Straps: Technical tape straps designed to keep the tight secure during high intensity.

125
GUN METAL

SEATPAD
BODYFIT PRO W

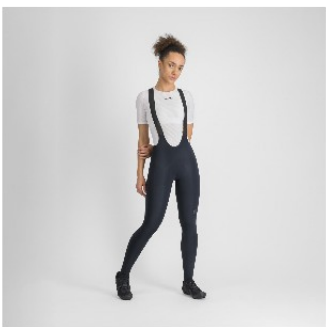

002
BLACK

TECHNICAL FEATURES

Breathable

TEMPERATURE RANGE
10 °C / 30 °C (50 °F / 86 °F)

SIZE AVAILABLE
XS S M L XL XXL

FIT
Regular

KASK
ULTEGRA

PULSE W BIBTIGHT

1125525

Winter Comfort, All-Ride Performance.

Winter cycling bibtight with soft fabric and Bodyfit Pro MD chamois for comfort.

Soft, brushed fabric for warmth and comfort
High elasticity for maximum freedom of movement
Bodyfit Pro MD chamois for superior support and cushioning
Raw-cut leg cuffs for a seamless, comfortable fit

301
GREEN THYME

SEATPAD
BODYFIT PRO W

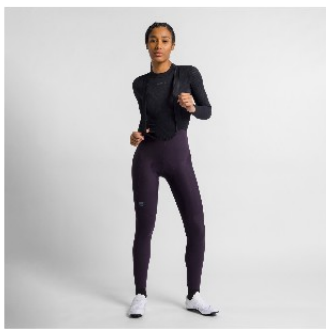

513
METRO PURPLE

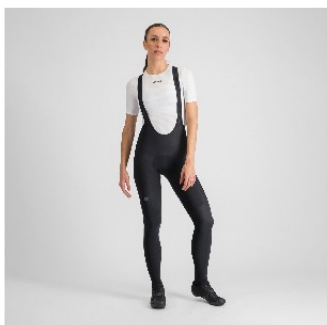

002
BLACK

TECHNICAL FEATURES

Breathable

TEMPERATURE RANGE
5 °C / 15 °C (41 °F / 59 °F)

SIZE AVAILABLE
XS S M L XL XXL

FIT
Slim

New arrival

PULSE W TIGHT

1126524

Warmth That Moves.

Thermal women's cycling tight with soft fleece fabric and Bodyfit Pro MD pad.

Soft brushed thermal fabric for warm, comfortable winter riding
Bodyfit Pro MD pad for long-distance support and shock absorption
Raw-cut leg endings for pressure-free comfort and smooth fit
Tight fit for optimal thermal efficiency and body support

513
METRO PURPLE

SEATPAD
BODYFIT PRO W

TECHNICAL FEATURES

Breathable

301
GREEN THYME

002
BLACK

TEMPERATURE RANGE
5 °C / 15 °C (41 °F / 59 °F)

SIZE AVAILABLE
XS S M L XL XXL

FIT
Slim

New arrival

FIANDRE 2 W VEST

1126525

Defy the Elements.

Shop Sportful FIANDRE 2 W VEST. High-performance cycling gilet with Polartec Aircore technology for wind protection, breathability, and 4-season road versatility.

Polartec Aircore Tech: Advanced wind protection with superior moisture management and breathability.
Double-Slider Zip: Versatile two-way zipper for customized ventilation from top or bottom.
4-Season Versatility: Lightweight, water-repellent construction suitable for all weather conditions.
Functional Storage: Three rear pockets to carry essentials without extra bulk.

002
BLACK

POLARTEC

TECHNICAL FEATURES

Water Repellent

Windproof

087
LUNAR ROCK

527
GALACTIC PURPLE

TEMPERATURE RANGE
5 °C / 15 °C (41 °F / 59 °F)

SIZE AVAILABLE
XS S M L XL XXL

FIT
Regular

sportful

SUPERGIARA 2 W VEST

1125521

Defy the Elements.

Windproof, water-splash resistant cycling vest with Polartec Alpha for top performance.

Windproof and splash-resistant with Polartec Alpha insulation for warmth.
Compact and packable design for easy storage.
Dual-zip system for customized ventilation control.
Zippered front pocket for secure storage of essentials.

002
BLACK

POLARTEC alpha

TECHNICAL FEATURES

Breathable

Windproof

Water Repellent

TEMPERATURE RANGE
-0 °C / 10 °C (32 °F / 50 °F)

SIZE AVAILABLE
XS S M L XL XXL

FIT
Regular

PRO 2 W VEST.

1125022

Elevate your race with the Sportful PRO 2 W VEST. Minimalist windproof design, aero stretch fabric, and high breathability. The choice of pro cyclists. Shop now.

Aero Windshield: Mechanical stretch windproof front fabric for a perfect race-ready tight fit.
Max Breathability: Highly ventilated back panel to optimize thermal regulation during efforts.
Pro Functionality: Double-slider YKK® zip and 3 rear pockets for easy access and versatility.
Compact Packability: Ultra-light minimalist construction, easily storable in a jersey pocket.

TECHNICAL FEATURES

Windproof

TEMPERATURE RANGE
10 °C / 30 °C (50 °F / 86 °F)

SIZE AVAILABLE
XS S M L XL XXL

FIT
Slim

5002
MISTIC VIOLET

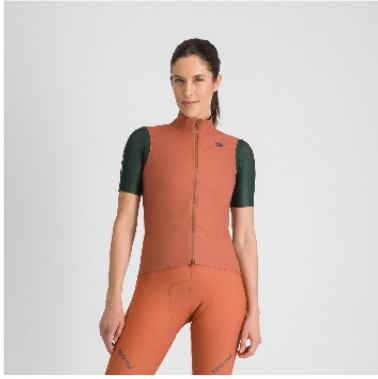

607
SIENNA GLOW

067
STONE GRAY

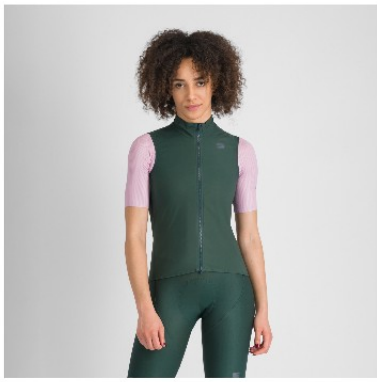

315
OBLIVION GREEN

002
BLACK

LIGHT AIR W VEST

1125031

Ride Light, Ride Free with LIGHT AIR VEST

Shop Sportful LIGHT AIR W VEST. Ultra-packable windproof cycling gilet for road and gravel. Lightweight design, double-slider zip, and maximum protection.

Ultra-Packable: Incredibly compact design that folds into its own minimal space.
Wind Protection:
High-performance barrier against wind chill for road and gravel.
Double-Slider Zip: Two-way zipper for easy temperature regulation and jersey access.
Featherweight Construction:
Pocketless design to minimize weight and maximize agility.

002

BLACK

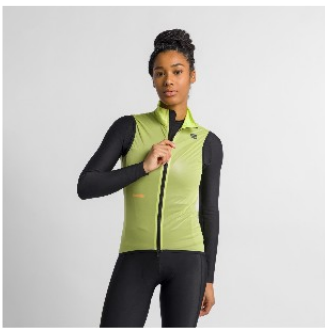

3509

NEON WHISPER

TECHNICAL FEATURES

Windproof

Water Repellent

TEMPERATURE RANGE

10 °C / 30 °C (50 °F / 86 °F)

SIZE AVAILABLE

XS S M L XL XXL

FIT

Regular

SUPERGIARA WOOL W JERSEY

1125520

Comfort Meets Performance.

Long-sleeve gravel cycling jersey with 40% merino wool for warmth and breathability.

40% merino wool blend with Techwool for warmth and comfort.
Excellent thermal regulation and breathability.
Quick-drying polyester for durability and moisture management.
Regular fit for comfort during long gravel rides.

294
SAND

002
BLACK

TECHNICAL FEATURES

Breathable

TEMPERATURE RANGE
-0 °C / 10 °C (32 °F / 50 °F)

SIZE AVAILABLE
XS S M L XL XXL

FIT
Regular

SUPERNOVA W THERMAL JERSEY

1125553

Embrace Winter, Unleash Performance.

High-performance winter cycling jersey with superior fit and warmth.

Race fit for an aerodynamic, performance-driven profile
High-stretch polyester for a close yet adaptable fit
Quick-drying properties for superior moisture management
Inspired by the Supernova summer collection's graphic design

352
SMOKY EMERALD

TECHNICAL FEATURES

Breathable

117
POMPELMO

002
BLACK

TEMPERATURE RANGE
5 °C / 15 °C (41 °F / 59 °F)

SIZE AVAILABLE
XS S M L XL XXL

FIT
Slim

New arrival

SRK 2 THERMAL W JERSEY

1126526

Warm Up Your Ride.

Thermal long-sleeve cycling jersey with soft stretch comfort and smart pocket design.

Soft brushed polyester with a light peached feel for cozy comfort
Stretch construction and clean armhole cut for a natural, minimal fit
Three rear pockets plus secure zip pocket for essentials
Regular fit ideal for road and gravel thermal layering

294
SAND

TECHNICAL FEATURES

Breathable

002
BLACK

527
GALACTIC PURPLE

TEMPERATURE RANGE
10 °C / 30 °C (50 °F / 86 °F)

SIZE AVAILABLE
XS S M L XL XXL

FIT
Regular

CLASSIC W THERMAL JERSEY

1125523

Classic Warmth, Modern Performance.

Versatile winter cycling jersey with warmth, quick-drying, and comfort.

100% polyester fabric for softness and quick-drying comfort
Thermal insulation suitable for mid-season and mild winter rides
Regular fit for freedom of movement and layering options
Classic line design with modern performance features

527
GALACTIC PURPLE

TECHNICAL FEATURES

Breathable

002
BLACK

856
VANILLA SUNSET

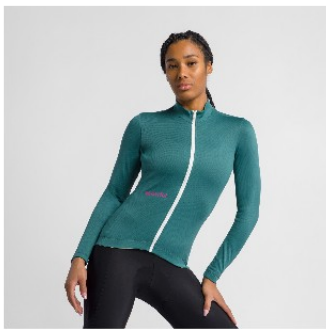

352
SMOKY EMERALD

TEMPERATURE RANGE
5 °C / 15 °C (41 °F / 59 °F)

SIZE AVAILABLE
XS S M L XL XXL

FIT
Regular

ALPHA® W VEST

1126528

Layer Smart. Ride Strong.

Next-level thermal vest with Polartec Alpha insulation for road &;amp; gravel cycling.

Polartec Alpha™ insulation for dynamic warmth and high breathability
Full-length front zipper for adaptable ventilation and layering
Regular fit designed for both road and gravel cycling
Lightweight, compressible design ideal for variable conditions

473

IONIC BLUE

TECHNICAL FEATURES

Breathable

TEMPERATURE RANGE

-0 °C / 10 °C (32 °F / 50 °F)

SIZE AVAILABLE

XS S M L XL XXL

FIT

Regular

MERINO W LAYER TEE LONG SLEEVES

1125529

Warmth That Rides With You.

Master any season with Sportful Merino Layer Tee LS. Techwool technology combines natural merino warmth and synthetic durability for elite cycling performance.

Techwool Blend: Premium mix of merino wool and polyamide for warmth and durability.
Natural Insulation: Regulates body temperature effectively in cold and damp conditions.
Quick-Dry Tech:
High-performance moisture wicking to keep skin dry under intensity.
Second-Skin Fit: Lightweight long-sleeve design for perfect layering and comfort.

002
BLACK

TECHNICAL FEATURES

Breathable

TEMPERATURE RANGE
5 °C / 15 °C (41 °F / 59 °F)

SIZE AVAILABLE
XXS XS S M L XL XXL

FIT
Regular

WINTER W LAYER TEE LONG SLEEVES

1125528

Warmth That Drives Performance

Master winter rides with Sportful WINTER W LAYER TEE LS. Ribbed thermal fabric for superior insulation, moisture management, and breathable cold-weather comfort.

Thermal Ribbed Knit: Advanced structure for superior heat retention and insulation.
Pro Moisture Wicking: High-performance polyester for rapid sweat evaporation.
Ergonomic Layering: Lightweight long-sleeve design that fits perfectly under jackets.
Climate Balance: Breathable fabric to regulate body temperature during intense rides.

002

BLACK

TECHNICAL FEATURES

Breathable

TEMPERATURE RANGE

5 °C / 15 °C (41 °F / 59 °F)

SIZE AVAILABLE

XXS XS S M L XL XXL

FIT

Regular

WINTER W LAYER TEE

1125527

Stay Warm, Ride Strong.

Keep warm with Sportful WINTER W LAYER TEE. Ribbed technical base layer for thermal insulation and superior moisture management during cold-weather cycling.

Thermal Ribbed Knit: Advanced structure designed to trap body heat and insulate.
Pro Moisture Wicking: High-performance polyester for rapid sweat evaporation.
Seamless Layering: Slim, low-bulk design that fits perfectly under winter jackets.
Cold-Weather Versatility: Ideal for high-intensity training and long endurance rides.

002
BLACK

TECHNICAL FEATURES

Breathable

TEMPERATURE RANGE
5 °C / 15 °C (41 °F / 59 °F)

SIZE AVAILABLE
XXS XS S M L XL XXL

FIT
Regular

PRO BASELAYER W TEE

1125042

Stay Cool, Ride Strong

Performance Baselayer TEE for Breathable Cycling Comfort

Top quality fabrics for better wicking management
Elastic fabric and lightweight construction

101
WHITE

TECHNICAL FEATURES

Breathable

TEMPERATURE RANGE
10 °C / 30 °C (50 °F / 86 °F)

SIZE AVAILABLE
XXS XS S M L XL XXL

FIT
Slim

PRO BASELAYER W SLEEVELESS

1125041

Stay Cool, Ride Strong

Elevate performance with Sportful PRO BASELAYER W SLEEVELESS. Ribbed fabric for superior moisture management, high stretch, and maximum breathability on the bike.

Ribbed Fabric: Advanced texture for accelerated moisture wicking and airflow.
High Elasticity: Ensures a supportive, non-restrictive fit for all body types.
Versatile Performance: Ideal for road, gravel, and high-intensity training sessions.
Discreet Comfort: Low-profile seams and sleeveless cut for seamless layering.

101
WHITE

TECHNICAL FEATURES

Breathable

TEMPERATURE RANGE
10 °C / 30 °C (50 °F / 86 °F)

SIZE AVAILABLE
XXS XS S M L XL XXL

FIT
Regular

CYCLING W UNDERSHORT

1122048

COMFORTABLE AND ALWAYS WITH YOU.

Upgrade your ride with Sportful CYCLING W UNDERSHORTs. Breathable mesh base layer featuring the Bodyfit Pro MD seat pad for ultimate comfort under any overshort.

Bodyfit Pro MD Pad:
Multi-density seat pad for versatile, long-distance comfort.
High Breathability: Lightweight technical mesh for superior sweat management.
Overshort Compatible: Slim profile designed to fit perfectly under casual or baggy shorts.
Anatomic Fit: Stretch construction that follows every pedal stroke without friction.

002

BLACK

SEATPAD
BODYFIT PRO W

TECHNICAL FEATURES

Breathable

TEMPERATURE RANGE
10 °C / 30 °C (50 °F / 86 °F)

SIZE AVAILABLE
XS S M L XL XXL

FIT
Regular

ESSENTIAL W BRA

1126032

Confidence on the bike. Freedom beyond.

Support meets performance with Sportful Essential W Bra. Breathable, adjustable, and perfect for cycling, gym, or running. Medium support for active women.

Multisport Support: Medium impact protection optimized for cycling, running, and gym.
Pro Breathability: Lightweight technical fabric for advanced moisture management.
Custom Fit: Adjustable straps to personalize support and eliminate pressure points.
Insert Ready: Internal pocket construction designed for optional removable pads.

002
BLACK

101
WHITE

TECHNICAL FEATURES

Breathable

TEMPERATURE RANGE
15 °C / 35 °C (60 °F / 95 °F)

SIZE AVAILABLE
S M L

FIT
Regular

sportful

FALL WINTER 2026

MEN'S

CASTELLI

GO TO WOMEN'S CATALOG

TECHNOLOGIES OVERVIEW

TRANSITION →

AIRCORE →

RISTRETTO →

NANOFLEX EVO →

PHOTOS
Ashley Gruber,
Jered Gruber
Wout Beel,
Federico Ravassard,
Chiara Redaschi,
Twila Federica Muzzi.

MEN'S COLLECTION

JACKETS →

PROTECTION →

JERSEYS →

TIGHTS →

UNLIMITED →

365 PRODUCTS →

BASE LAYERS →

ACCESSORIES →

FALL WINTER 2026

21°–30°+ → Spring/Summer

TRNSTN. TRANSITION. 12° - 20°

The old way of riding was simple: summer gear in summer, winter gear in winter. One moment you were in bibshorts and short sleeves, the next you were bundling up for "winter training." Base miles replaced intensity, and jackets, bibtights, overshoes, and gloves became your new essentials—summer kit retired until next spring.

Today, cycling moves at a different pace. Seasons don't hit like a switch—they transition gradually, giving us a new window of riding: Transition. Temperatures between 12°–20° are too fresh for summer gear, too mild for full thermal layers. It's the perfect zone—long rides, high performance, no compromise.

By adding smarter layers and using modern technologies like Castelli Ristretto, you can ride comfortably and push your limits throughout Transition. It's not winter, it's not summer—it's the sweetspot of the season.

0°–11° → Fall/Winter

DT SWISS
DT SWISS
DT SWISS
WIDE

KEY TRANSITION PRODUCTS

ESPRESSO 2 BIBSHORT

4526001

INTENDED USE

The cornerstone piece for riding through the transition period. When temperatures fluctuate and conditions are hard to predict, this is the bibshort you build your outfit around.

T ° RANGE

15-35 °C / 59-95 °F

FIT

TAILORED

RECOMMENDED LAYERING

ESPRESSO KNEE/LEG WARMER

4526527

SEATPAD

progetto X

ESPRESSO THERMAL BIBSHORT

4526520

INTENDED USE

The ultimate transition product. Warmth, stretch and comfort in a performance driven design.

T ° RANGE

10-18 °C / 50-64 °F

FIT

TAILORED

RECOMMENDED LAYERING

TOE THINGY 3

4526527

SEATPAD

progetto X

ESPRESSO TRNSTN BIBTIGHT

4526519

INTENDED USE

When it is a bit too chilly for a standard bibshort but nowhere near cold enough for a full bibtight, the Espresso TRNSTN steps in.

T ° RANGE

8-16 °C / 46-60 °F

FIT

TAILORED

SEATPAD

progetto X

ESPRESSO LS JERSEY

4526012

INTENDED USE

Espresso comfort and style. A summer weight fabric for cool days. Our favorite transition product.

+

ESPRESSO 2 VEST

4526013

INTENDED USE

The essential layering piece for riding through the transition period. When conditions are variable and temperatures change mid-ride, this is the vest you want with you.

T ° RANGE

12-30 °C / 54-86 °F

FIT

TAILORED

CORRETTO LS JERSEY

4526010

INTENDED USE

Corretto in italian means "corrected". This jersey reflects that idea. Lightweight long sleeve with sharper graphics, bolder lines and a confident new energy. An evolution of the Castelli design language perfectly embodies transition.

T ° RANGE

15-30 °C / 59-86 °F

FIT

TAILORED

RECOMMENDED LAYERING

TRANSITION AIR VEST

4526508

TRANSITION AIR JACKET

4526507

INTENDED USE

The transition air jacket is lightweight, easy to throw on, and designed to elevate whatever you are wearing on the bike. The jacket for coffee rides, early starts + short descent off the mountain.

T ° RANGE

10-18 °C / 50-64 °F

FIT

REGULAR

FRONT AND BACK

ROSSOCORSA

DO.DI.CI. JACKET

4525504

INTENDED USE

The ultimate jacket for higher intensity rides in cool conditions. Castelli Ristretto Technology offers next generation breathability.

T ° RANGE

8-15 °C / 46-59 °F

FIT

RACE

WET ROADS

FRONT AND BACK

CASTELLI RISTRETTO

project number

001

name

TRANSITION VEST

TRANSITION AIR VEST

4526508 — 645

ESPRESSO LS JERSEY

4526012 — 506

ESPRESSO 2 BIBSHORT

4525001 — 021

ESPRESSO 18 SOCK

4525026 — 001

project number
002

name
CORRETTO

CORRETTO LS JERSEY
4526010 — 502

ESPRESSO 2 VEST
4526013 — 268

ESPRESSO THERMAL BIBSHORT
4526520 — 010

ESPRESSO 18 SOCK
4525026 — 001

AW26 TRANSITION TEMPO LOOKS

project number

003

name

ESPRESSO

ESPRESSO 2 LS JERSEY
4526012 — 506

ESPRESSO 2 VEST
4526013 — 065

ESPRESSO TRNSTN BIBTIGHT
4526519 — 294

ESPRESSO 18 SOCK
4525026 — 010

project numer

004

name

TRANSITION

TRANSITION AIR JACKET

4526507 — 462

ESPRESSO THERMAL 2 JERSEY

4526510 — 456

ESPRESSO 2 BIBSHORT

4526001 — 010

ESPRESSO 18 SOCK

4525026 — 001

project number

005

name

DODICI

DO.DI.CI. JACKET
4526510 — 010

ULTRA RAIN CAPE
4524506 — 462

DO.DI.CI. GLOVE
4526572 — 010

FREE AERO RACE S BIBSHORT
4525001 — 010

ESPRESSO 18 SOCK
4525026 — 001

project number

006

SWEETSPOT

SWEETSPOT JACKET

4526504 — 424

SATURDAY MORNING SUIT

4526006 — 034

AW'26 TRANSITION TEMPO LOOKS

project number

001

name

ESPRESSO W

ESPRESSO 2 W LONG SLEEVE JERSEY
4526056 — 053

ESPRESSO 2 W VEST
4526057 — 065

ESPRESSO 2 W DT BIBSHORT
4526051 — 010

ESPRESSO 2 W 12 SOCK
4525063 — 001

project number

002

name

TRANSITION W

TRANSITION AIR W JACKET
4526522 — 065

ESPRESSO 2 W LONG SLEEVE JERSEY
4526056 — 486

ESPRESSO 2 W DT BIBSHORT
4526051 — 010

ESPRESSO 2 W 12 SOCK
4525063 — 001

project number

003

name

DODICI W

DO.DI.CI. W JACKET
4525554 — 268

ESPRESSO 2 W DT BIBSHORT
4526051 — 010

TOE THINGY 3
4526527 — 010

project number

004

name

ULTRA

DO.DI.CI. W JACKET

4525554 — 268

ULTRA W RAIN CAPE

4525567 — 462

ESPRESSO W DT TRNSTN BIBTIGHT

4526545 — 010

CASTELLI RISTRETTO TECH.NOLOGY

When the weather app shows there is no sign of rain, and the priority is core body warmth on your intense ride, then the answer is Castelli Ristretto Technology. Engineered Air Permeability, where we cranked up the breathability to make the best jacket for dry weather while delicately restricting the amount of airflow just enough to keep you dry on the inside. A delicate balance, optimised during countless hours in our trusted testing zone - the Dolomites. Castelli Ristretto Technology was developed to allow riders to go longer with maximum comfort.

CASTELLI RISTRETTO PRODUCTS:

- DO.DI.CI. JACKET
- DO.DI.CI. SS JACKET
- SWEETSPOT JACKET
- PERFETTO 2 VEST
- DO.DI.CI. GLOVE

CASTELLI
RISTRETTO

POLARTEC® AIRCORE™

150g

- PERFETTO PRO JACKET
- ALPHA 150 JACKET
  + POLARTEC ALPHA INNER LAYER
- AIRCORE ONE JACKET
- ESPRESSO 2 GLOVE

POLARTEC® AIRCORE™

219g

- PERFETTO 4 JACKET
- ESPRESSO 2 JACKET

POLARTEC® AirCore™

POLARTEC® AIRCORE™

298g

- COMPETIZIONE JACKET
- ENTRATA 2 W JACKET
- POLARE 4 BIBTIGHT

- ESPRESSO 2 SHOECOVER
- ESTREMO 2 SHOECOVER
- ESTREMO 2 GLOVE
- BALACLAVA 2.0
- ESTREMO THERMAL WINTER SKULLY
- ESTREMO THERMAL WINTER CAP

POLARTEC AIRCORE

An exclusive fabric technology introduced in 2025, this fabric technology re-dressed how modern day cyclists engage with cold riding conditions. Developed after a curious question, "What does the modern day cyclist really need in order to achieve maximum performance?" was presented to our partners Polartec. The PFAS Free, Electrospun, Semi-Air-Permeable membrane received widespread industry acclaim due to its outstanding ability to protect cyclists who ride in cool conditions with the possibility of light showers.

Having taken the time to further explore the limits and capabilities of this technology we have been able to seamlessly integrate Polartec Aircore into more products across our collection. With the dolomites in our backyard, we were able to test Polartec Aircore Technology to the boundaries of its limits.

The newest development of Polartec Aircore comes with the introduction of a new fabric weight - 219g. This allows us to offer a combined 3 weights in total - 150g, 219g and 298g. Creating a comprehensive offer that allows us to focus in greater detail on a wider range of temperatures.

For the cyclist seeking maximum performance, looking to go beyond.

NANOFLEX EVO

Nano Flex is a technology that has long been associated with Castelli and perfectly symbolizes our constant drive for product innovation. Over the course of its lifespan, the Nano Flex technology has seen different iterations, but never has it had such a major update as this latest version. With Castelli committed to removing all elements of PFAS from our product line, we engineered a new Nano Flex Evo technology.
PFAS-free technologies require regular retreatment, but on a rainy day this product will protect you and keep you warm. With a polypropylene base fabric and Castelli's nanotechnology treatment, Nano Flex is still the best clothing for bad weather.

NANOFELX EVO PRODUCTS:

- NANO RAIN BIBTIGH
- NANOFLEX EVO ARM WARMERS
- NANOFLEX EVO LEG WARMERS

1.

Use your Nanoflex Evo products only for rainy days

↓

2.

Wash according to the product care label

↓

3.

Treat while wet with water repellent spray after wash (2-3x)

↓

4.

Put in closet until next rainy day

MEN'S JACKETS

JACKETS OVERVIEW

-5°C 0°C 5°C

COMPETIZIONE JACKET

4525506

INTENDED USE

Very warm jacket for riding in cold conditions. Polartec Aircore 298g featuring feece inner layer. Riding below 0° becomes a reality with this jacket.

T ° RANGE

-4-10 °C / 25-50 °F

FIT

REGULAR

LIGHT RAIN

FRONT AND BACK

POLARTEC AirCore™

FABRIC WEIGHT

298g

ROSSOCORSA

ALPHA 150 JACKET

4525502

INTENDED USE

Our most innovative jacket for cold weather conditions for the cyclist who embraces the cold weather, this jacket is an unfair advantage.

T ° RANGE

-4-12 °C / 25-55 °F

FIT

TAILORED

LIGHT RAIN

FRONT AND BACK

POLARTEC AirCore™ + POLARTEC Alpha®

OUTER LAYER FABRIC WEIGHT

150g

ESPRESSO 2 JACKET

4526502

INTENDED USE

The Espresso 2 Jacket delivers the comfort and style you have come to expect from products in the Espresso range. Constructed with Polartec® Aircore™ 219g technology for intelligent warmth and breathability.

T ° RANGE

4-12 °C / 39-57 °F

FIT

REGULAR

LIGHT RAIN

FRONT AND BACK

POLARTEC AirCore™

FABRIC WEIGHT

219g

10°C 15°C 20°C

ROSSOCORSA

PERFETTO 4 JACKET

4526500

INTENDED USE

The perfect jacket for the cyclist seeking maximum performance. Engineered using industry leading fabric technology – providing performance in majority of modern day conditions.

T ° RANGE

4-12 °C / 39-57 °F

FIT

TAILORED

LIGHT RAIN

FRONT AND BACK

POLARTEC AirCore™

FABRIC WEIGHT

219g

ROSSOCORSA

PERFETTO PRO JACKET

4526501

INTENDED USE

The perfect, no compromise jacket that keeps you performing at your limits delivering the ideal balance of protection and breathability.
Made for race conditions and hard training rides.

T ° RANGE

10-18 °C / 50-64 °F

FIT

RACE

LIGHT RAIN

FRONT AND BACK

POLARTEC AirCore™

FABRIC WEIGHT

150g

SWEETSPOT JACKET

4526504

INTENDED USE

Engineered for the riders who know that wearing the correct jacket at the right temperature can transform a ride.

T ° RANGE

7-15 °C / 45-59 °F

FIT

TAILORED / RACE

WET ROADS

FRONT AND BACK

CASTELLI RISTRETTO

ROSSOCORSA

DO.DI.CI. JACKET

4525504

INTENDED USE

Ultimate jacket for high intensity rides in cool–mild conditions on dry roads. 12x.

T ° RANGE

9-16 °C / 46-61 °F

FIT

RACE

WET ROADS

FRONT AND BACK

CASTELLI RISTRETTO

PERFETTO 4 JACKET

4526500

SIZES	T°RANGE
XS S M L XL XXL 3XL	4-12 °C / 39-53 °F
WEIGHT	**FIT**
286 g	Tailored
WATERPROOFNESS	**WINDPROOFNESS**
Light Rain	Front and Back

The benchmark for all-condition performance. When conditions change, 219 g AirCore™ keeps you warm.

The jacket that does it all for the modern-day cyclist
Protects from wind and rain while being highly breathable and stretchy for comfort
Exclusive 219 g Polartec® AirCore™ fabric with electrospun air-permeable membrane gives industry-leading breathability
Lightly insulated for cool conditions, can extend to cold conditions with an extra insulation layer
Chameleon-taped shoulder seams for extra rain protection
Top- and bottom-opening YKK® Vislon® zipper for easy sliding, covered for additional wind and rain protection
3 rear pockets with drain holes
Reflective Rosso Corsa label features on the center pocket
Longer drop tail with reflective stripe for coverage from wheel spray
Membrane and all fabrics are PFAS-free

010
BLACK

455
STEEL FADE

034
BRILLIANT ORANGE

456
TWILIGHT BLUE

THE BENCHMARK FOR ALL-CONDITION PERFORMANCE.

When conditions change, Perfetto 4 leads.

The project started with a blank piece of paper in the Castelli product development office and a curious question, "What does the modern day cyclist really need to achieve maximum performance in cold conditions?"

We pushed our partners Polartec® to go beyond, and together we have developed a fabric technology with the modern day cyclist at its core. Polartec® AirCore™ - the revolutionary PFAS Free, Electrospun, Semi-Air-Permeable membrane protects cyclists who ride in cool conditions with the possibility of light showers. With our continued focus on improvement, we introduce the exclusive Polartec® AirCore™ fabric in a new 219g weight, meaning the Perfetto 4 now gives extra warmth and protection.

The Perfetto Jacket has always been instantly identifiable on the road. The iconic shoulder taping has been updated with a modern look and feel, using a transparent chameleon tape projecting the main body fabric through. The Polartec® AirCore™ fabric works harder and smarter, the more effort you are applying to your ride. And so the iconic Perfetto zippered ventilation openings are no longer a requirement. The Perfetto 4 Jacket features a re-imagined ergonomic splash tail, effectively guarding the rider against road spray. With a nostalgic nod to our very first original Gabba, we have added metal drainage holes to the rear pockets.

For the cyclist seeking maximum performance the Perfetto 4 Jacket adds complete comfort.

Polartec® AirCore™
219g

PERFETTO PRO JACKET

4526501

SIZES	T°RANGE
XS S M L XL XXL 3XL	6-14 °C / 42-57 °F
WEIGHT	**FIT**
226 g	Race
WATERPROOFNESS	**WINDPROOFNESS**
Light Rain	Front and Back

The Perfetto jacket for pro-level performance with 150 g AirCore™ and minimalist construction.

Engineered for race conditions, with a stripped-down construction focused purely on performance
Sleek, close-to-body fit designed to eliminate excess bulk
Protects from wind and rain while being highly breathable and stretchy for comfort
Exclusive 150 g Polartec® AirCore™ fabric with electrospun air-permeable membrane for industry-leading breathability
Uninsulated for cool conditions, can extend to cold conditions with an extra insulation layer
Chameleon-taped shoulder seams for extra rain protection
Top- and bottom-opening YKK® Vislon® zipper for easy sliding, covered for additional wind and rain protection
3 floating rear pockets with drain holes, a proven construction found in our Gabba R products
Longer drop tail with reflective stripe, for coverage from wheel spray
Membrane and all fabrics are PFAS-free
A true pro-level piece, built for riders who demand absolute performance

010
BLACK

383
ELECTRIC LIME

424
BELGIAN BLUE

357
SHADOW

PRO LEVEL PERFETTO PERFORMANCE

The natural evolution of Polartec® AirCore™ was its entry into the WorldTour peloton, where performance is judged without compromise and the Castelli name is respected at the highest level. Our Soudal Quick-Step athletes demand equipment that is precise, efficient, and essential and Polartec® AirCore™ delivers exactly that.

The Perfetto Pro Jacket is built as a sleek, stripped-back race piece. Its ergonomic, close-to-body construction is designed to eliminate excess and maximise the breathable stretch and comfort of Polartec® AirCore™. We use the exclusive 150 g Polartec® AirCore™ fabric, selected to deliver the optimal balance of breathability and protection for riders operating at higher speeds and sustained intensity.

The PFAS-free, electrospun, semi-air-permeable membrane provides essential protection in cool conditions, with confidence against light showers. Shoulder seams are reinforced with a modern transparent tape for targeted rain protection without added bulk. Proven floating pocket and splash tail constructions which have been refined from the Gabba R Jacket are integrated for stability and function at race pace.

A pure, pro-level jacket for riders who operate in the fast zone and expect nothing but essential performance.

Polartec® AirCore™
150g

ALPHA 150 JACKET

4525502

SIZES	T°RANGE
XS S M L XL XXL 3XL	-2-10 °C / 28-50 °F
WEIGHT	**FIT**
318 g	Tailored
WATERPROOFNESS	**WINDPROOFNESS**
Light Rain	Front and Back

The best cold weather jacket. Polartec® AirCore™ outer layer keeps out wind and rain while remaining highly breathable. Polartec® Alpha™ inside adds insulation.

The best jacket for cold to very cold conditions
Outer layer made from Castelli's exclusive 150 g Polartec® AirCore™ electrospun air-permeable membrane gives industry-leading breathability
Polartec® Alpha™ inner liner for significant insulation at extremely light weight with excellent moisture management
Top- and bottom-opening YKK® Vislon® zipper for easy sliding, covered for additional wind and rain protection
Zippered key/money pocket on front side
3 rear pockets
Reflective piping at bottom of pockets

085
LIGHT BLACK/BLACK

357
SHADOW/BLACK

506
GARNET/BLACK

383
ELECTRIC LIME/BLACK

ESPRESSO 2 JACKET

4526502

SIZES	T°RANGE
XS S M L XL XXL 3XL	4-12 °C / 39-53 °F
WEIGHT	**FIT**
356 g	Regular
WATERPROOFNESS	**WINDPROOFNESS**
Light Rain	Front and Back

POLARTEC AirCore™

The Espresso 2 Jacket delivers the comfort and style you have come to expect from the Espresso line. Constructed with 219 g Polartec® AirCore™ technology for intelligent warmth and breathability.

The jacket that introduces Polartec® AirCore™ fabric to the Espresso product line
Exclusive 219 g Polartec® AirCore™ fabric with electrospun air-permeable membrane gives industry-leading breathability
Lightly insulated for warmth in wide range of conditions
YKK® Vislon® zipper
Lightly insulated for warmth in wide range of conditions
Protects from wind and light rain while being highly breathable and stretchy for comfort
3 lie-flat back pockets
Engineered waist with raw-cut lie-flat back to keep out cold air
Reflective elastic for added visibility and safety

010
BLACK

506
GARNET

294
CLAY

456
TWILIGHT BLUE

LIKE YOUR MORNING ESPRESSO

This jacket is an autopilot choice that does not require overthinking

The Espresso 2 Jacket delivers the comfort and style you have come to expect from products in the Espresso range. Constructed with Polartec® Aircore™ 219g technology for intelligent warmth and breathability.

Like your morning espresso, it's a necessity - an autopilot choice that does not require overthinking. It provides the right level of insulation when the ride starts cool, adapts as intensity builds, and keeps you comfortable across changing conditions. The Espresso 2 Jacket is the dependable jacket that sets the tone for the ride. Consistent and exactly what you expect.

espresso
CASTELLI

COMPETIZIONE JACKET

4525506

SIZES	T°RANGE
XS S M L XL XXL 3XL	-4-10 °C / 25-50 °F
WEIGHT	**FIT**
466 g	Regular
WATERPROOFNESS	**WINDPROOFNESS**
Light Rain	Front and Back

POLARTEC

Very warm protection in all conditions with a fleece inner layer, Polartec® AirCore™ membrane for wind and rain resistance, and reflective details to keep you seen.

Very warm jacket for riding in cold conditions, including with light rain and wet roads
Outer layer made from Castelli's exclusive 298 g Polartec® AirCore™ electrospun air-permeable membrane gives industry-leading breathability
Micro-grid fleece inner face for insulation
YKK® Vislon® zipper for easy sliding
3 rear pockets
Reflective heat transfers at sides of pocket

023
RED

085
LIGHT BLACK

502
NIGHT SHADE

462
BLUE CIRCUIT

SWEETSPOT JACKET

4526504

SIZES	T°RANGE
XS S M L XL XXL 3XL	7-15 °C / 44-59 °F
WEIGHT	**FIT**
236 g	Tailored
WATERPROOFNESS	**WINDPROOFNESS**
Wet Roads	Front and Back

For high-intensity riding in cool conditions, Ristretto fabric provides maximum breathability to transform a ride.

Ristretto technology for unparalleled breathability, warmth, and dryness
Ristretto Lite fabric technology with PFAS-free DWR treatment
Top- and bottom-opening YKK® Vislon® easy-sliding zipper
3 lie-flat pockets, with 4th zippered security pocket for valuables
Engineered waist with ergonomic splash tail to protect from wheel spray
Castelli partnered with fabric innovator ITTTAI® to create an exclusive fabric that combines advanced stretch, breathability, and water protection through ITTTAI®'s membrane and lamination expertise

010
BLACK

424
BELGIAN BLUE

455
STEEL FADE/DARK GRAY

712
MANGO MOJITO

DO.DI.CI. JACKET

4525504

SIZES	T°RANGE
XS S M L XL XXL 3XL	8-15 °C / 46-59 °F
WEIGHT	**FIT**
288 g	Race
WATERPROOFNESS	**WINDPROOFNESS**
Wet Roads	Front and Back

The ultimate jacket for higher intensity rides in cool conditions. Castelli Ristretto technology allows a small amount of air to come in and evaporate sweat, 12 times more than previous technology.

Next-generation breathability in a stretch jacket that blurs the line between a jersey and a jacket, for cool to mild conditions
Exclusive Castelli Ristretto technology with engineered air permeability keeps most wind out, allowing in just enough to provide exceptional breathability — 12 times more than previous Castelli Perfetto jackets
Close-to-body stretch race fit doesn't feel constricting, thanks to Ristretto stretch fabrics
Minimalist construction for speed and comfort
YKK® Vislon® zipper for easy sliding
3 rear pockets
Reflective piping at bottom of pocket for visibility
Castelli partnered with fabric innovator ITTTAI® to create an exclusive fabric, combining advanced stretch, breathability, and water protection through ITTTAI®'s membrane and lamination expertise

085
LIGHT BLACK

451
METALLIC BLUE

268
CHESTNUT

065
IVORY

DO.DI.CI. SHORT SLEEVE JACKET

4525505

SIZES	T°RANGE
XS S M L XL XXL 3XL	8-15 °C / 46-59 °F
WEIGHT	**FIT**
180 g	Race
WATERPROOFNESS	**WINDPROOFNESS**
Wet Roads	Front and Back

The ultimate jacket for higher intensity rides in cool conditions. Castelli Ristretto technology allows a small amount of air to come in and evaporate sweat, 12 times more than previous technology.

Next-generation breathability in a stretch short-sleeve jacket that blurs the line between a jersey and a jacket, for cool to mild conditions
Exclusive Castelli Ristretto technology with engineered air permeability keeps most wind out, allowing in just enough to provide exceptional breathability — 12 times more than previous Castelli Gabba jackets
Close-to-body stretch fit doesn't feel constricting, thanks to Ristretto stretch fabrics
Minimalist construction for speed and comfort
YKK® Vislon® zipper for easy sliding
3 rear pockets
Reflective piping at bottom of pocket for visibility
Castelli partnered with fabric innovator ITTTAI® to create an exclusive fabric, combining advanced stretch, breathability, and water protection through ITTTAI®'s membrane and lamination expertise

065
IVORY

085
LIGHT BLACK

268
CHESTNUT

PERFETTO 2 VEST

4526505

SIZES	T°RANGE
XS S M L XL XXL 3XL	10-18 °C / 50-64 °F
WEIGHT	**FIT**
128 g	Tailored
WATERPROOFNESS	**WINDPROOFNESS**
Wet Roads	Front

This vest is made for when you need warmth for the entire ride.

Mid-weight vest for cool temperatures, providing moderate insulation with excellent breathability
Castelli Ristretto Lite fabric technology for unparalleled breathability, warmth, and dryness with PFAS-free DWR treatment
Stretch woven back for stretch with excellent breathability
Top- and bottom-opening YKK® Vislon® easy-sliding zipper
3 lie-flat pockets with security lip inside
Castelli partnered with fabric innovator ITTTAI® to create an exclusive fabric that combines advanced stretch, breathability, and water protection through ITTTAI®'s membrane and lamination expertise

034
BRILLIANT ORANGE

424
BELGIAN BLUE

010
BLACK

MEN'S PROTECTION

GABBA R JACKET

4524504

SIZES	T°RANGE
XS S M L XL XXL 3XL	4-18 °C / 39-64 °F
WEIGHT	**FIT**
228 g	Race
WATERPROOFNESS	**WINDPROOFNESS**
Fully Waterproof	Front and Back

ROSSOCORSA

The next generation of Foul Weather Race Equipment has arrived. The Gabba R Jacket long sleeve is more protective and more aerodynamic than ever before.

Castelli exclusive fabric with a microporous electro-spun hydrophilic polyurethane membrane
The external membrane keeps it light and breathable while avoiding an external textile layer that holds moisture next to the membrane
The fabric weighs just 125gr /m2 and stretches to at least double the original dimension in each direction
The inner fabric backer is 78% polyester / 22% elastane to maintain the extreme stretch while enhancing breathability
The polyurethane membrane has been formulated to be more hydrophobic than standard polyurethane.
Stretch wrist closure to keep water out
YKK® Vislon® waterproof zipper
3 rear mesh pockets for drainage
Drop tail with reflective stripe
The membrane and entire fabrics are PFAS-free
Castelli partnered with fabric innovator ITTTAI® to create an exclusive fabric, combining advanced stretch, breathability, and water protection through ITTTAI®'s membrane and lamination expertise.

010
BLACK

GABBA R

4524505

SIZES	T°RANGE
XS S M L XL XXL 3XL	10-18 °C / 50-64 °F
WEIGHT	FIT
218 g	Race
WATERPROOFNESS	WINDPROOFNESS
Fully Waterproof	Front and Back

ROSSOCORSA

The next generation of Foul Weather Race Equipment has arrived. The Gabba R Jacket short sleeve is more protective and more aerodynamic than ever before.

Castelli exclusive fabric with a microporous electro-spun hydrophilic polyurethane membrane
The external membrane keeps it light and breathable while avoiding an external textile layer that holds moisture next to the membrane
The fabric weighs just 125gr /m2 and stretches to at least double the original dimension in each direction
The inner fabric backer is 78% polyester / 22% elastane to maintain the extreme stretch while enhancing breathability
The polyurethane membrane has been formulated to be more hydrophobic than standard polyurethane.
YKK® Vislon® waterproof zipper
3 rear mesh pockets for drainage
Drop tail with reflective stripe
The membrane and entire fabrics are PFAS-free
Castelli partnered with fabric innovator ITTTAI® to create an exclusive fabric, combining advanced stretch, breathability, and water protection through ITTTAI®'s membrane and lamination expertise.

010
BLACK

ULTRA RAIN CAPE

4524506

SIZES	T°RANGE
XS S M L XL XXL 3XL	4-18 °C / 39-64 °F
WEIGHT	**FIT**
147 g	Regular
WATERPROOFNESS	**WINDPROOFNESS**
Fully Waterproof	Front and Back

POLARTEC

Waterproof packable jacket made with Polartec® Power Shield™ RPM two-layer stretch fabric. It's designed to be used in conjunction with our Ristretto Technology jackets, but it fits over just a jersey without flapping in the wind and can be packed down to fit in a pocket.

Waterproof packable jacket
2-layer stretch form-fit Polartec® Power Shield™ RPM fabric
PFAS-free and PFC-free DWR treatment
Taped seams to keep water out
Long tail for added protection from wheel spray
Packs into internal pocket for easy carrying when on the bike
YKK® zipper for easy use
Reflective piping for added visibility
Contains recycled fibers and can be recycled

010
BLACK/SILVER REFLEX

462
BLUE CIRCUIT/SILVER REFLEX

GARMIN
BLACK INC

EMERGENCY 3 RAIN JACKET

4525508

SIZES	T°RANGE
S M L XL XXL 3XL	5-18 °C / 41-64 °F
WEIGHT	FIT
222 g	Regular
WATERPROOFNESS	WINDPROOFNESS
Fully Waterproof	Front and Back

For emergency use under the unexpected downpour, or all day use on a rainy day. It's water and wind proof, and moderately packable. 3 layer fabric is comfortable against skin.

Fully waterproof 3-layer shell jacket, highly packable, with performance stretch fit
New Castelli 3-layer Deluge fabric with 20,000 mm water column is thin and light for packability
Knit polyester layer inside is comfortable next to skin
Fit is close to body but not tight, and the fabric's stretch makes sure it doesn't bind
Highly packable to fit into a jersey pocket or bikepacking bag
All-day water protection with taped seams
360° reflectivity
Waterproof zipper

001
WHITE

034
BRILLIANT ORANGE

085
LIGHT BLACK

SQUALL SHELL JACKET

4524507

SIZES	T°RANGE
XS S M L XL XXL 3XL	4-18 °C / 39-64 °F
WEIGHT	FIT
95 g	Regular
WATERPROOFNESS	WINDPROOFNESS
Fully Waterproof	Front and Back

Made to take with you on days when it looks like rain, but it's lightweight and packable so you can take it on every ride just in case. This jacket is designed to keep you dry in case of a shower or to take the chill off when you descend from the mountains.

Lightweight construction for packability
Stretch 2-layer fabric with waterproof membrane
Taped seams
Reflective stripe on back for added visibility
Elastic at wrist and waist to keep out water and cold air

870
SILVER GRAY/BLACK

085
LIGHT BLACK/SILVER GRAY

383
ELECTRIC LIME/BLACK

ARIA SHELL 2 JACKET

4526047

SIZES	T°RANGE
XS S M L XL XXL 3XL	10-18 °C / 50-64 °F
WEIGHT	FIT
108 g	Tailored
WATERPROOFNESS	WINDPROOFNESS
	Front/Sleeves

An extremely light and packable wind shell that fits close to body, with stretch breathability panels, allowing you extend the temperature range of your favorite Castelli pieces.

Ultralight windproof woven microfiber front and back
Striped mesh fabric at sides and back of sleeves is stretchy to prevent fabric flapping in wind
Folds up extremely small
Integrated stuff sack
YKK® Vislon® top- and bottom-opening zipper
Reflective Castelli logos

625
DEEP BORDEAUX

424
BELGIAN BLUE

294
CLAY

030
DARK GRAY

870
SILVER GRAY/DARK GRAY

ARIA 2 VEST

4526048

SIZES	T°RANGE
XS S M L XL XXL 3XL	10-18 °C / 50-64 °F
WEIGHT	FIT
100 g	Tailored
WATERPROOFNESS	WINDPROOFNESS
	Front

Ultralight and ackable wind vest that fits close to body with a stretch breathable back. It effectively blocks wind on the front without causing overheating.

Ultralight windproof woven microfiber front
Striped mesh fabric at sides and back is stretchy to prevent fabric flapping in wind
Folds up extremely small
Integrated stuff sack
YKK® Vislon® top- and bottom-opening zipper
Reflective Castelli logos

625
DEEP BORDEAUX

294
CLAY

424
BELGIAN BLUE

030
DARK GRAY

870
SILVER GRAY/DARK GRAY

TRANSITION AIR JACKET

4526507

SIZES	T°RANGE
XS S M L XL XXL 3XL	10-18 °C / 50-64 °F
WEIGHT	FIT
89 g	Tailored
WATERPROOFNESS	WINDPROOFNESS
None	Front and Back

The Transition Air Jacket is lightweight, easy to throw on, and designed to elevate whatever you're wearing on the bike.

Microfiber 20 denier nylon fabric is essentially windproof with engineered Castelli Ristretto-level air permeability
Ergonomic cut for perfect fit
High collar to keep drafts out
Top- and bottom-opening asymmetrical zip with branded Castelli scorpion puller
Reflective Castelli wordmark and scorpion logo on back for low-light visibility
Elasticated cuffs and waist for a clean silhouette, secure fit, and effortless styling on and off the bike

021
SMOKY GRAY

010
BLACK

065
IVORY

645
RICH RED

462
BLUE CIRCUIT

TRANSITION AIR VEST

4526508

SIZES	T°RANGE
XS S M L XL XXL 3XL	12-20 °C / 53-68 °F
WEIGHT	**FIT**
66 g	Tailored
WATERPROOFNESS	**WINDPROOFNESS**
None	Front and Back

The Transition Air Vest is lightweight, easy to throw on, and designed to elevate whatever you're wearing on the bike.

Microfiber 20 denier nylon fabric is essentially windproof with engineered Castelli Ristretto-level air permeability
Ergonomic cut for perfect fit
High collar to keep drafts out
Top- and bottom-opening asymmetrical zip with branded Castelli scorpion puller
Reflective Castelli wordmark and scorpion logo on back for low-light visibility
Elasticated waist for a clean silhouette, secure fit, and effortless styling on and off the bike

021
SMOKY GRAY

065
IVORY

462
BLUE CIRCUIT

010
BLACK

645
RICH RED

KASK
PINARELLO

MEN'S JERSEYS

THERMOWOVEN LS JERSEY

4526509

SIZES	T°RANGE
XS S M L XL XXL 3XL	12-18 °C / 53-64 °F
WEIGHT	FIT
173 g	Tailored
WATERPROOFNESS	WINDPROOFNESS

The definitive long-sleeve jersey with engineered performance you can feel.

Engineered stretch-woven fabric for warmth and comfort
24% wool content for natural insulation and enhanced warmth
3 rear pockets plus a 4th zippered security pocket for essentials, designed for practicality
Full-length YKK® Vislon® zipper
Elasticated waist with silicone grip to keep the jersey securely in place during long rides
Refined translucent Castelli wordmark and scorpion logo, offering understated, quiet aesthetics

053
SILVER MOON

424
BELGIAN BLUE

010
BLACK

CASTELLI
GARMIN
CASTELLI

ESPRESSO THERMAL 2 JERSEY

4526510

SIZES	T°RANGE
XS S M L XL XXL 3XL	12-18 °C / 53-64 °F
WEIGHT	**FIT**
238 g	Tailored
WATERPROOFNESS	**WINDPROOFNESS**
None	None

Warm, soft, and comfortable — the essentials of any great thermal jersey.

Extra soft and warm fleece-lined fabric with stretch for comfort and perfect fit
3 back pockets, with 4th zippered security pocket for valuables
Full-length YKK® Vislon® zipper with easy-use zipper pull
Elastic at waist with silicone to keep jersey in place

065
IVORY

506
GARNET

110
BLACK/WHITE

357
SHADOW

451
METALLIC BLUE

456
TWILIGHT BLUE

ESPRESSO 2 VEST

4526013

SIZES	T°RANGE
XS S M L XL XXL 3XL	12-20 °C / 53-68 °F
WEIGHT	**FIT**
139 g	Tailored
WATERPROOFNESS	**WINDPROOFNESS**
None	Front

The perfect vest to match your favorite Espresso kit. Wind protection on front, breathable back, highly packable, 3 pockets, double-opening zipper.

Stretch woven front to allow just enough air through to keep you dry and comfortable
Air_O Stretch fabric on back and sides for breathability, comfort, and perfect fit
3 back pockets
Top- and bottom-opening YKK® zipper
Elastic at waist to keep vest in place

110
BLACK/WHITE

065
IVORY

506
GARNET

357
SHADOW

451
METALLIC BLUE

268
CHESTNUT

PURO 4.1 JERSEY

4526511

SIZES	T°RANGE
XS S M L XL XXL 3XL	12-18 °C / 53-64 °F
WEIGHT	FIT
320 g	Regular
WATERPROOFNESS	WINDPROOFNESS
None	None

For cool days in early fall or late spring, the Puro Jersey offers just the right amount of warmth. Very stretchy close-to-body fit with 360° reflective visibility.

Mid-weight warmth with excellent moisture management, performance fit, and 360° reflectivity
The 3D knit of the 93% polyester / 7% elastane fabric traps air on the inside, providing more warmth than expected from a 180 g fabric
The high stretch allows for a close fit that doesn't feel tight
Reflective panels on shoulder and heat transfers on pocket for visibility
Gripper elastic at waist
3 rear pockets
Easy-sliding YKK® Vislon® zipper

455
STEEEL FADE

462
BLUE CIRCUIT

030
DARK GRAY

GIRO

COMPETIZIONE THERMAL LS JERSEY

4526512

SIZES	T°RANGE
XS S M L XL XXL 3XL	12-18 °C / 53-64 °F
WEIGHT	**FIT**
274 g	Regular
WATERPROOFNESS	**WINDPROOFNESS**
None	None

The thermal jersey for the cyclist who prefers a jersey and vest in cool conditions instead of a light jacket. The brushed-fleece fabric keeps you warm but also has enough stretch to ensure a perfect, comfortable fit.

Made from 100% polyester fleece for extra warmth and wicking
Easy-sliding YKK® Vislon® zipper
3 rear pockets
Silicone gripper elastic at waist
Embossed Castelli logo on rear for a clean, modern aesthetic

010
BLACK

424
BELGIAN BLUE

455
STEEL FADE

655
PAPRIKA

065
IVORY

NEBULA THERMAL LS JERSEY

4526513

SIZES	T°RANGE
XS S M L XL XXL 3XL	14-18 °C / 57-64 °F
WEIGHT	**FIT**
231 g	Race
WATERPROOFNESS	**WINDPROOFNESS**
None	None

Comfort and warmth for cool days with fleeced mid-weight body fabric and high-stretch sleeves.

Mid-weight warmth with excellent moisture management and performance fit
Main body in a 3D knit 93% polyester / 7% elastane fabric that traps air on the inside for warmth and excellent moisture management
Side panels and sleeves in 80% polyester / 20% fleeced knit for excellent fit and comfort
Gripper elastic at waist
3 rear pockets
Easy-sliding YKK® Vislon® zipper

451
METALLIC BLUE/STEEL FADE

506
GARNET/HIBISCUS

870
SILVER GRAY/NICKEL GRAY

529
DEEP PURPLE/POOL BLUE

ESPRESSO 2 LS JERSEY

4526012

SIZES	T°RANGE
XS S M L XL XXL 3XL	15-30 °C / 59-86 °F
WEIGHT	FIT
163 g	Tailored
WATERPROOFNESS	WINDPROOFNESS

Designed to be your favorite jersey for every ride except race day. Espresso comfort and style, revised and refined. 2.0. Summer-weight fabric for cool days.

Castelli-engineered Air_O Stretch fabric for breathability, comfort, and perfect fit
Summer-weight fabric optimized for breathability and aerodynamics, perfect for cool days
3 back pockets, with 4th zippered security pocket for valuables
Full-length YKK® Vislon® zipper with easy-use zipper pull
Elastic at waist with silicone to keep jersey in place
UPF 30

053
SILVER MOON

506
GARNET

CORRETTO LS JERSEY

4526010

SIZES	T°RANGE
XS S M L XL XXL 3XL	15-30 °C / 59-86 °F
WEIGHT	FIT
194 g	Tailored
WATERPROOFNESS	WINDPROOFNESS

Long sleeves and summer-weight fabrics in a fast and bold design.

Race fit — ideal for high-intensity road riding and racing
Summer-weight fabrics with long sleeves make jersey ideal for cool days
Engineered with contrasting fabrics on body and sleeves to optimize comfort in key zones
Sleeve and body fabric optimized for breathability and aerodynamics
Contoured collar construction enhances fit around neck
3 back pockets, with 4th zippered security pocket for valuables
Full-length YKK® Vislon® zipper with easy-use zipper pull
Elastic at waist with silicone to keep jersey in place

455
STEEL FADE/CHESTNUT-VIVID ORAN

502
NIGHT SHADE/ELMWOOD-ROSA GIRO

MEN'S TIGHTS

Paul Magnier

BIBTIGHTS OVERVIEW

-0°C 5°C

ROSSOCORSA

THERMOWOVEN BIBTIGHT

4526516

INTENDED USE

Everything a bibtight should be, done flawlessly. Quiet luxury. Maximum performance. Designed to pair perfectly with the Alpha 150 Jacket, it's made for riders who demand the very highest standard of performance and refinement.

T * RANGE

0-14 °C / 32-27 °F

FIT

TAILORED

SEAT PAD

PROGETTO X²

COMPETIZIONE BIBTIGHT

4525514

INTENDED USE

Extra warmth and mind protection in the front makes this tight comfortable in cold to cool conditions. High stretch for maximum comfort.

T * RANGE

0-12 °C / 32-53 °F

FIT

TAILORED

SEAT PAD

KISS AIR²

5°C

15°C

ROSSOCORSA

SORPASSO PRO BIBTIGHT

4526517

INTENDED USE

Engineered as the workhouse in our winter bibtight lineup. It is the tight you reach for time and again thanks to it's robust construction and reliable performance in every condition.

T° RANGE

2-14 °C / 36-57 °F

FIT

RACE

SEAT PAD

PROGETTO X²

ESPRESSO 2 BIBTIGHT

4526518

INTENDED USE

The best bibtight for most of your winter riding. With a focus on comfort, we've used warm and soft thermoflex fabric throughont, with carefullybplace seams to minimize irritation. The Progetto X² Air seamless seat pad for comfort on the longest days in the saddle.

T° RANGE

4-15 °C / 39-59 °F

FIT

TAILORED

SEAT PAD

PROGETTO X²

ENTRATA BIBTIGHT

4520524

INTENDED USE

This tight simply keeps you warm and comfortable on all but the coldest days.

T° RANGE

6-14 °C / 43-57 °F

FIT

REGULAR

SEAT PAD

KISS AIR²

THERMOWOVEN BIBTIGHT

4526516

SIZES	T°RANGE
XS S M L XL XXL 3XL	0-14 °C / 32-57 °F
WEIGHT	FIT
273 g	Tailored
WATERPROOFNESS	WINDPROOFNESS

The definitive performance bibtight for the widest range of conditions.

Technical stretch-woven 245 g fabric for warmth, comfort, and perfect fit
15% wool content provides warmth and insulation, while 20% Lycra gives stretch for complete comfort
Soft, stretchy bib straps articulated over shoulder for maximum comfort
Perforated back panel for breathability
Reflective elements integrated using a modern seamless approach to maintain a clean aesthetic
Progetto X2 Air seamless seat pad for long-distance comfort
Elastic ankle cuff engineered for a modern look and a precise, stay-put fit

010
BLACK

EVERYTHING A BIBTIGHT SHOULD BE, DONE FLAWLESSLY.

Quiet luxury. Maximum performance.

Everything a bibtight should be, done flawlessly. Subtle luxury. Maximum performance. From the moment you pull it on, you feel that unmistakable promise of maximum comfort. Designed to pair perfectly with the Alpha 150 Jacket, it's made for riders who demand the very highest standard of performance and refinement.

At the core of the bibtight is our ultra-luxurious stretch-woven fabric, engineered with a soft wool interior that rests gently against the skin. The 15% wool content delivers exceptional warmth; a smooth, tailored fit; and a quietly premium feel. The ergonomic cut and carefully considered patterning follow the body's natural lines, ensuring unrestricted movement and all-day comfort.

Reflective elements are integrated using a modern approach to maintain a clean aesthetic. The upper bib construction comes directly from our much-loved Premio Bibshort, offering the same supportive stability riders trust for long hours in the saddle.

The Thermowoven Bibtight is the definitive choice for riders who are looking for comfort and quality when the temperature drops.

SORPASSO PRO BIBTIGHT

4526517

SIZES	T°RANGE
XS S M L XL XXL 3XL	2-14 °C / 35-57 °F
WEIGHT	**FIT**
231 g	Tailored
WATERPROOFNESS	**WINDPROOFNESS**
Wet Roads	None

The workhorse of the bibtight collection. Consistent performance ride after ride.

The workhorse bibtight that keeps you riding through the widest range of conditions for the entire winter season
Castelli-engineered Definitivo warm fabric for comfort and perfect fit
Anatomic shaping at hips and knees
Lie-flat elastic bib straps
Zipperless ankle to reduce bulk
Progetto X2 Air seamless seat pad for long-distance comfort
Reflective inserts for maximum visibility from behind
Embossed Castelli wordmark logo

424
BELGIAN BLUE

010
BLACK

021
SMOKY GRAY

THE WORKHORSE OF THE BIBTIGHT COLLECTION.

Consistent performance ride after ride.

In Italian, the name Sorpasso means "overtaking," and that's exactly what this tight is built to do — move past the ordinary and deliver a faster, better, more comfortable winter ride.
Engineered as the workhorse of our cold-weather collection, it's the tight you reach for time and again, thanks to its robust construction and reliable performance in all conditions.

At its core is an anatomical cut designed to move with your body. Carefully sculpted patterning provides a natural bend at the knee and hip for a smooth, unrestrictive pedal stroke, while the highly stretchy, compressive fabrics wrap the muscles for warmth, support, and all-day comfort. Seamless bib straps lie flat and stay put, keeping the fit perfectly stable.

The modern reflective elements are fully integrated into the design — sleek, minimal, and positioned to enhance visibility without interrupting the clean aesthetic.
Paired with our Progetto X2 Air seamless seat pad for long-ride comfort, the Sorpasso Pro Bibtight stands as the definitive winter tight: sleek, fast, and ready for whatever the season brings.

ESPRESSO 2 BIBTIGHT

4526518

SIZES	T°RANGE
XS S M L XL XXL 3XL	4-15 °C / 39-59 °F
WEIGHT	**FIT**
256 g	Tailored
WATERPROOFNESS	**WINDPROOFNESS**
None	None

THERMOFLEX

The best winter bibtight for most of your winter riding. With a focus on comfort, we've used warm and soft Thermoflex fabric throughout, with carefully placed seams to minimize irritation, and the Progetto X2 Air seamless seat pad for comfort on the longest days in the saddle.

Thermoflex fabric for warmth, stretch, and comfort
Stretch-mesh bib straps for ventilation and comfort
Progetto X2 Air seamless seat pad for long-distance comfort
Zipperless ankle to reduce bulk
Embossed logos

424
BELGIAN BLUE

309
DEEP GREEN

010
BLACK

357
SHADOW

021
SMOKY GRAY

268
CHESTNUT

THE ESPRESSO OF TIGHTS - COMFORT, PERFORMANCE AND A VARIETY OF COLOR OPTIONS.

The Espresso 2 Bibtight is your go-to for winter miles — the tight you'll reach for every time the temperature drops. Built from our ultra-soft Thermoflex fabric, it has exceptional warmth and stretch so you stay focused on the ride, not the cold. Clean seam placement keeps everything smooth against the skin, while the zipperless ankle design eliminates irritation and reduces bulk under shoecovers.

Up top, we've used the same breathable mesh straps from the Espresso 2 Bibshort to keep the fit locked in without creating excess heat. And for long, steady winter days, the Progetto X2 Air seamless seat pad delivers the comfort you need to just keep rolling.

espresso
CASTELLI

ESPRESSO TRNSTN BIBTIGHT

4526519

SIZES	T°RANGE
XS S M L XL XXL 3XL	8-16 °C / 46-60 °F
WEIGHT	**FIT**
212 g	Tailored
WATERPROOFNESS	**WINDPROOFNESS**
None	None

The perfect bridge between bibshort and bibtight, featuring Espresso summer short fabric.

Castelli-engineered Espresso Doppio fabric for comfort and perfect fit
Raw-cut leg endings for clean-cut finish
Stretch-mesh bib straps for ventilation and comfort
Pocket on rear for added storage
Progetto X2 Air seamless seat pad for all-day comfort
Reflective tabs for increased visibility

010
BLACK

294
CLAY

655
PAPRIKA

424
BELGIAN BLUE

ESPRESSO THERMAL BIBSHORT

4526520

SIZES	T°RANGE
XS S M L XL XXL 3XL	10-18 °C / 50-64 °F
WEIGHT	**FIT**
222 g	Tailored
WATERPROOFNESS	**WINDPROOFNESS**
None	None

This thermal bibshort combines warmth, stretch, and comfort.

Extreme comfort in a thermal short, offering just the right level of warmth for fall and spring rides
Thermoflex fabric for warmth, stretch, and comfort
Sculpted raw-cut leg endings finish just above knee
Stretch-mesh bib straps for ventilation and comfort
Progetto X2 Air seamless seat pad for long-distance comfort

021
SMOKY GRAY

357
SHADOW

424
BELGIAN BLUE

010
BLACK

COMPETIZIONE BIBTIGHT

4525514

SIZES	T°RANGE
XS S M L XL XXL 3XL	0-12 °C / 32-54 °F
WEIGHT	FIT
348 g	Tailored
WATERPROOFNESS	WINDPROOFNESS
None	None

KISS AIR²

Extra warmth and wind protection in the front make this tight comfortable in cool to cold conditions. High stretch for maximum comfort. KISS Air2 seat pad.

Extreme comfort for cool- to cold-weather rides, with partial wind-resistant front panel for extended temperature range
Castelli's Core Due front fabric (down to knees), with its tightly knit nylon outer face backed with polyester hollow-core fleece on the inside, blocks more wind while providing excellent insulation and moisture management
Lower legs in Castelli's Thermoflex warm fleece
Seat area and back of legs in 3D knit 80% nylon / 20% elastane for excellent stretch and comfort
KISS Air2 seat pad
Raw-cut ankle openings
Mesh bibs with elastic seamless straps

010
BLACK

ENTRATA BIBTIGHT

4520524

SIZES	T°RANGE
XS S M L XL XXL 3XL	6-14 °C / 43-57 °F
WEIGHT	FIT
306 g	Regular
WATERPROOFNESS	WINDPROOFNESS

KISS AIR2

"Less is more" is the concept behind this tight. With quality fabrics, a soft seat pad and reduced seam patterning, this tight simply keeps you warm and comfortable on all but the coldest days.

Thermoflex fabric for warmth and comfort
KISS Air2 seat pad is so good it's the choice of some of our pro riders
Mesh bib straps
Ankle zippers for easy on/off
Reflective logo below knee
Reflective flap over ankle zipper for extra visibility

010
BLACK

ENTRATA TIGHT

4521519

SIZES	T°RANGE
XS S M L XL XXL 3XL	6-12 °C / 43-54 °F
WEIGHT	FIT
308 g	Regular
WATERPROOFNESS	WINDPROOFNESS

KISS AIR²

For the rider who doesn't want bib straps, here's the performance waist tight. With quality fabrics, a soft seat pad, and reduced seam patterning, this tight simply keeps you warm and comfortable on all but the coldest days.

Thermoflex fabric for warmth and comfort
KISS Air2 seat pad is so good it's the choice of some of our pro riders
Ankle zippers for easy on/off
Reflective logo below knee
Reflective flap over ankle zipper for extra visibility

010
BLACK

ENTRATA THERMAL BIBKNICKER

4521518

SIZES	T°RANGE
XS S M L XL XXL 3XL	12-18 °C / 54-64 °F
WEIGHT	FIT
250 g	Regular
WATERPROOFNESS	WINDPROOFNESS

KISS AIR2

Cooler than a tight and warmer than a short, this bibknicker provides knee protection with the comfort of Thermoflex high-stretch brushed fleece fabric and the KISS Air2 seat pad.

Thermoflex fabric for warmth and comfort
KISS Air2 seat pad is so good it's the choice of some of our pro riders
Mesh bib straps
Reflective logo below knee

010
BLACK

HARSH CONDITIONS BIBTIGHTS

-4°C

RAIN

5°C

POLARE 4 BIBTIGHT

4525516

INTENDED USE

Extreme cold? No problem. These tights are for your coldest rides. Featuring a Polartec® AirCore™ front panel and Thermoflex back and the comfort of the KISS Air2 pad.

T° RANGE

-5-5 °C / 23-41°F

FIT

REGULAR

WET ROADS

FRONT

SEAT PAD

PROGETTO X

POLARTEC AirCore

ENTRATA 2 WIND BIBTIGHT

4526595

INTENDED USE

A special conditions bibtight for extreme cold conditions. A stretch windproof front fabric with PU membrane and Thermoflex on the back

T° RANGE

-2-6 °C / 28-43 °F

FIT

REGULAR

WET ROADS

FRONT

SEAT PAD

KISS AIR²

ROSSOCORSA

NANO RAIN BIBTIGHT

4526568

INTENDED USE

For hardcore riders who make no excuses and embrace the foul weather.

T° RANGE

4-16 °C / 39-60 °F

FIT

TAILORED

LIGHT RAIN

NONE

SEAT PAD

PROGETTO X

NANOFLEX

POLARE 4 BIBTIGHT

4525516

SIZES	T°RANGE
XS S M L XL XXL 3XL	-5-5 °C / 23-41 °F
WEIGHT	FIT
397 g	Regular
WATERPROOFNESS	WINDPROOFNESS
Wet Roads	Front

For your coldest rides with Polartec® AirCore™ front panel and Thermoflex back and the comfort of the KISS Air2 pad.

The warmest tight for riding in below-freezing conditions
Full Polartec® AirCore™ front for total wind protection
Thermoflex fleece on seat and back of leg for extra warmth and stretch
Mesh bibs don't hold moisture
KISS Air2 seat pad provides great cushioning without excessive bulk
High-visibility reflective stripes above knee in front and above calf on back
Ankle zips for easy on/off

010
BLACK

ENTRATA 2 WIND BIBTIGHT

4526595

SIZES	T°RANGE
XS S M L XL XXL 3XL	-2-6 °C / 28-43 °F
WEIGHT	**FIT**
342 g	Regular
WATERPROOFNESS	**WINDPROOFNESS**
Wet Roads	Front

KISS AIR²

A special-conditions bibtight for extreme cold. A stretch windproof front fabric with a polyurethane membrane and Thermoflex on the back.

AirFlex Thermo fabric on front panels for maximum stretch and total windproofness
KISS Air2 seat pad for all-day comfort
Flat-lock seams
Camlock ankle zips with reflective zip cover

010
BLACK

NANO RAIN BIBTIGHT

4526568

SIZES	T°RANGE
XS S M L XL XXL 3XL	4-16 °C / 39-60 °F
WEIGHT	FIT
278 g	Tailored
WATERPROOFNESS	WINDPROOFNESS
Fully Waterproof	

NANOFLEX EVO PROGETTO X2

For hardcore riders who make no excuses and embrace the foul weather.

Nano Flex EVO technology for enhanced stretch and mobility with heightened water resistance
Reflective Nano Flex Evo labels provide improved visibility in low-light conditions
Raw-cut ankle allows smooth integration with overshoes for a clean, comfortable fit
Progetto X2 Air seamless seat pad
Reduced seaming for enhanced overall comfort and fit
Perforated back panel optimizes breathability

010
BLACK

A TRUE WET-WEATHER BIBTIGHT DESIGNED EXCLUSIVELY FOR RIDING IN THE RAIN.

Nano Flex has always stood for innovation at Castelli. It earned its reputation by delivering water protection that worked rain or shine. But the reality is clear: in a PFAS-free world, that type of all-conditions treatment is no longer possible.

So we reset.

With Nano Flex EVO, we didn't try to recreate the past. Instead, we engineered something purpose-built: a true wet-weather bibtight designed exclusively for riding in the rain.

The Nano Rain Bibtight is for those hardcore riders who never skip the ride when conditions turn bad. When roads are soaked, temperatures are low, and staying dry matters more than versatility. It uses tightly knitted polypropylene fabric with a PFAS-free C0 DWR, that naturally resists water absorption while delivering exceptional warmth. This construction creates a protective barrier that still protects when the weather is at its worst.

To support this focused performance, the bibtight features a reduced seam construction, a raw-cut ankle for less bulk when pairing with a shoecover and integrated reflective tape with the Nano Flex EVO logo for added visibility.

This is not a "rain or shine" bibtight. It is a rain-only tool, and it requires care to perform at its best. After each wet ride, wash the tight. While still wet after washing, apply a water-repellent reproofer spray generously, then allow it to dry for 24 hours. Once dry, store it until the next rainy day.

When conditions are foul and the ride still goes ahead, the Nano Rain Bibtight is the piece you trust—purpose-built, uncompromising, and ready for the worst weather you're willing to ride in.

MEN'S UNLIMITED

FLY DIRECT JACKET

4524500

SIZES	T°RANGE
XS S M L XL XXL 3XL	0-12 °C / 32-54 °F
WEIGHT	**FIT**
238 g	Regular
WATERPROOFNESS	**WINDPROOFNESS**
Light Rain	Front and Back

POLARTEC Alpha

Lightweight FLY construction with Polartec® Alpha® Direct insulation creates a warm winter jacket that is packable for variable conditions and long bike adventures.

Super-lightweight construction with amazing warmth, protection, and packability
Ultralightweight windproof microfiber woven outer shell with DWR treatment
Polartec® Alpha® Direct insulation for maximum loft and insulation with minimal bulk
Top- and bottom-opening YKK® Vislon® zipper
3 back pockets
Reflectivity at waist and wrists for added visibility

085
LIGHT BLACK/DARK GRAY

207
PEBBLE BROWN

FLY DIRECT VEST

4525073

SIZES	T°RANGE
XS S M L XL XXL 3XL	10-19 °C / 50-66 °F
WEIGHT	**FIT**
161 g	Regular
WATERPROOFNESS	**WINDPROOFNESS**
Wet Roads	Front

POLARTEC® Alpha®

Packable lightweight thermal vest with Polartec® Alpha® Direct insulation.

Super-lightweight construction with amazing warmth, protection, and packability
Ultralightweight windproof microfiber woven outer shell with DWR treatment
Polartec® Alpha® Direct insulation for maximum loft and insulation with minimal bulk
Top- and bottom-opening YKK® Vislon® zipper
3 back pockets
Reflectivity at waist for added visibility

085
LIGHT BLACK/DARK GRAY

207
PEBBLE BROWN

UNLTD ROAM HOODIE

4525520

SIZES	T°RANGE
XS S M L XL XXL 3XL	10-16 °C / 50-61 °F
WEIGHT	FIT
284 g	Trail
WATERPROOFNESS	WINDPROOFNESS
None	Front

For on- and off-bike use with a warm fleece body and windproof nylon overlays over the upper chest and hood.

Fleece riding hoodie with windproof nylon overlays
Castelli's Warmer fleece body in 195 g multi-denier 100% polyester fleece
Overlays on hood, upper chest, and shoulders in 15-denier windproof Japanese woven ripstop nylon shell with DWR finish
YKK® half-length zipper
Zippered chest pocket

075
MILITARY GREEN/BURNT ORANGE

354
GREEN PEPPER/KIWI

431
SODALITE BLUE/PALE BLUE

064
NICKEL GRAY/DARK GRAY

UNLIMITED TRAIL 2 JERSEY

4526566

SIZES	T°RANGE
XS S M L XL XXL 3XL	12-18 °C / 53-64 °F
WEIGHT	FIT
237 g	Regular
WATERPROOFNESS	WINDPROOFNESS

The perfect thermal jersey for Unlimited riding — long adventures where the kilometers don't stop and the weather doesn't matter. Designed to deliver the comfort and warmth you expect and need to ride farther and longer.

High-loft brushed polyester fleece fabric keeps you warm and dry, while 5% elastane provides stretch for a perfect fit
Tight knit keeps some wind away for extra warmth
3 cargo-style rear pockets
YKK® Vislon® zipper for easy opening/closing
Regular fit

021
SMOKY GRAY/MANGO MOJITO

863
VIVID ORANGE/DEEP GREEN

UNLIMITED BIBTIGHT

4525521

SIZES	T°RANGE
XS S M L XL XXL 3XL	4-16 °C / 39-61 °F
WEIGHT	FIT
331 g	Regular
WATERPROOFNESS	WINDPROOFNESS
None	None

Fabrics and seat pad like the Espresso Bibtight but with the added convenience of side pockets. Thermoflex fabric is good for cool to cold conditions.

The perfect comfort warm tight for everything but the coldest winter rides
Thermoflex fabric for warmth, stretch, and comfort
Stretch mesh bib straps for ventilation and comfort
Mesh pockets on side of each leg
Progetto X2 Air seamless seat pad for long-distance comfort
Zipperless ankle to reduce bulk
Reflective tab on back of leg

010
BLACK

294
CLAY

CASTELLI CYCLING

ESPRESSO 2 JERSEY

4526011

065
IVORY

021
SMOKY GRAY

SIZES

XS S M L XL XXL 3XL

Castelli-engineered Air_O Stretch fabric for breathability, comfort, and perfect fit
Fabric optimized for breathability and aerodynamics
Raw-cut sleeve endings for comfort
3 back pockets, with 4th zippered security pocket for valuables
Full-length YKK® Vislon® zipper with easy-use zipper pull
Elastic at waist with silicone to keep jersey in place
UPF 30

294
CLAY

110
BLACK/WHITE

CASTELLI CYCLING

ESPRESSO 2 BIBSHORT

4526001

424
BELGIAN BLUE

021
SMOKY GRAY

SIZES

XS S M L XL XXL 3XL

Castelli-engineered Espresso Doppio fabric for comfort and perfect fit
Progetto X2 Air seamless seat pad for all-day comfort
Raw-cut leg endings with silicone grippers
Stretch-mesh bib straps for ventilation and comfort
Pocket on rear for added storage

010
BLACK

CASTELLI CYCLING

PREMIO EVO BIBSHORT

4525000

010
BLACK

SIZES

XS S M L XL XXL 3XL

Gradient-stretch woven fabric for the right support in the right place
Woven fabric weighs 30% less than comparable knit fabric
Soft, stretchy bib straps articulated over shoulder for maximum comfort
Perforated back panel for breathability
Integrated gripper elastic at leg ending holds short in place without need for additional silicone grippers
Progetto X2 Air Seamless seat pad

CASTELLI CYCLING

FREE AERO RACE S BIBSHORT

4525001

010
BLACK

SIZES

XS S M L XL XXL 3XL

Aero-optimized Forza2 Stretch fabric for maximum comfort and aerodynamic advantage
Aero-optimized fabric delivers 3% decrease in CdA
Lie-flat bib straps and a breathable mesh back keep you cooler
Silicone leg grippers to keep leg endings in place
Progetto X2 Air Seamless seat pad for comfort even on your longest rides
Back pocket for extra storage or race radio
Short fabric rated to 50+ UPF protection

CASTELLI CYCLING

ENDURANCE 4 BIBSHORT

4526003

010
BLACK

SIZES

XS S M L XL XXL 3XL

Endurance Evolution fabric provides optimum muscle support and feels drier in nearly all conditions
Anatomic cut for perfect on-bike fit
Mesh bib straps and back to keep you cooler
Progetto X2 Air Seamless seat pad for even greater comfort and improved airflow
GIRO3 leg grippers lie flat

KISS air 2

CASTELLI CYCLING

COMPETIZIONE 2 BIBSHORT

4525004

010
BLACK

SIZES

XS S M L XL XXL 3XL

KISS Air2 seat pad for all-day comfort
Affinity Pro Lycra® fabric on inside of leg for outstanding stretch and rebound
Vortex V2 textured fabric on legs for better aerodynamics
Raw-edge leg gripper with integrated silicone
Flat-lock stitching
UPF 50+

KISS air 2

ENTRATA 2 BIBSHORT

4523003

010
BLACK

SIZES

XS S M L XL XXL 3XL

KISS Air2 seat pad for all-day comfort
Pro Dry matte Lycra® for good compression and moisture management
8-panel construction for perfect fit
Rear reflective panels on lower leg
GIRO3 engineered flat leg band
Mesh straps for comfort and breathability

CASTELLI CYCLING

SIZES

CASTELLI CYCLING

ENDURANCE 4 BIBSHORT

4526003

010
BLACK

SIZES

XS S M L XL XXL 3XL

Endurance Evolution fabric provides optimum muscle support and feels drier in nearly all conditions
Anatomic cut for perfect on-bike fit
Mesh bib straps and back to keep you cooler
Progetto X2 Air Seamless seat pad for even greater comfort and improved airflow
GIRO3 leg grippers lie flat

CASTELLI CYCLING

COMPETIZIONE 2 BIBSHORT

4525004

010
BLACK

SIZES

XS S M L XL XXL 3XL

KISS Air2 seat pad for all-day comfort
Affinity Pro Lycra® fabric on inside of leg for outstanding stretch and rebound
Vortex V2 textured fabric on legs for better aerodynamics
Raw-edge leg gripper with integrated silicone
Flat-lock stitching
UPF 50+

ENTRATA 2 BIBSHORT

4523003

010
BLACK

SIZES

XS S M L XL XXL 3XL

KISS Air2 seat pad for all-day comfort
Pro Dry matte Lycra® for good compression and moisture management
8-panel construction for perfect fit
Rear reflective panels on lower leg
GIRO3 engineered flat leg band
Mesh straps for comfort and breathability

MEN'S BASE LAYERS

CASTELLI

COLD DAYS 2nd LAYER

4526535

SIZES	T°RANGE
XS S M L XL XXL 3XL	-8-5 °C / 17-41 °F
WEIGHT	FIT
176 g	Regular
WATERPROOFNESS	WINDPROOFNESS

POLARTEC Alpha

Maximum insulation and moisture management for cold rides, to layer between a base layer and a jacket.

Polartec® Alpha® 90 high-loft active insulation fabric made from recycled PET
Maximum breathability
Asymmetrical zip
High collar

010
BLACK

870
SILVER GRAY

ADDED INSULATION, EXTENDED WARMTH.

The Polartec® Alpha® fabric is an amazing insulator, and it's soft, stretchy, and lightweight. A couple of years ago we thought it would make an excellent fabric for a base layer, but it tended to feel wet and clammy against the skin. But when looking for more insulation for sub-freezing gravel rides, we tried using the Alpha® prototypes as a second layer on top of a Prosecco base layer — and stumbled into the best combination for cold riding. We worked on the details and created this second layer for cold rides. We've given it a half zip so it doesn't create bulk over the lower torso, and we've mounted the zip slightly off-center to avoid the bulk of multiple zippers at the neck. We've kept the fit close to body so you have the choice to tuck it into your tights or leave it out like we do. We also found that it works well over a Flanders, Medio, Merino, or Seamless base layer.

COLD DAYS 2nd LAYER VEST

4526521

SIZES	T°RANGE
XS S M L XL XXL 3XL	-4-10 °C / 24-50 °F
WEIGHT	FIT
128 g	Regular
WATERPROOFNESS	WINDPROOFNESS

POLARTEC Alpha

Maximum insulation and moisture management for cold rides, to layer between a base layer and a jacket.

Wear over a long sleeve base layer to keep your core warmer on cooler days
Polartec® Alpha® 90 high-loft active insulation fabric made from recycled PET
Maximum breathability
Adds 5°C of comfort

010
BLACK

FLANDERS 2 HIGH NECK WARMER

4525524

SIZES	T°RANGE
XS S M L XL XXL	-4-6 °C / 25-43 °F
WEIGHT	FIT
244 g	Regular
WATERPROOFNESS	WINDPROOFNESS
None	None

Our warmest base layer with integrated seamless neck warmer.

The warmest synthetic fleece base layer, with a built-in neck warmer that can be pulled up as a face mask or even helmet liner
SottoZero multi-denier 100% polyester fleece fabric
Flat Merrow stitching
Mesh armpit insert

008
GRAY

010
BLACK

FLANDERS 2 LONG SLEEVE

4525525

SIZES	T°RANGE
XS S M L XL XXL	-2-10 °C / 28-50 °F
WEIGHT	FIT
215 g	Regular
WATERPROOFNESS	WINDPROOFNESS
None	None

Our warmest base layer with mid height collar.

Warm fleece base layer with mid-height neck for cold conditions
SottoZero Fleece multi-denier 100% polyester fabric
Flat Merrow stitching
Mesh armpit insert

010
BLACK

008
GRAY

MERINO SEAMLESS BASELAYER

4524527

SIZES	T°RANGE
S/M L/X XXL	-4-10 °C / 25-50 °F
WEIGHT	FIT
209 g	Regular
WATERPROOFNESS	WINDPROOFNESS

Seamless comfort with a lightweight merino wool blend. Ideal for cold days to provide warmth and moisture management to keep you comfortable.

Merino wool blend
Seamless construction for comfort and fit
Machine washable
Low collar

010
BLACK

castrelli

CORE SEAMLESS BASE LAYER

4520531

SIZES	T°RANGE
S/M L/X XXL	4-16 °C / 39-61 °F
WEIGHT	FIT
206 g	Regular
WATERPROOFNESS	WINDPROOFNESS

Seamless for comfort and surprisingly warm for its weight, this base layer is ideal in cool conditions, providing excellent moisture management.

84% polyester / 16% polypropylene yarns provide soft, warm wicking and exceptional stretch fit
Seamless construction means extra comfort
Lighter weight on side and back
Wide neck opening to fit under short-collared jerseys

010
BLACK

CORE SEAMLESS BASE LAYER SS

4520575

SIZES	T°RANGE
S/M L/X XXL	8-20 °C / 46-68 °F
WEIGHT	FIT
141 g	Regular
WATERPROOFNESS	WINDPROOFNESS

Seamless for comfort and surprisingly warm for its weight, this base layer is ideal in cool conditions, providing excellent moisture management.

84% polyester / 16% polypropylene yarns provide soft, warm wicking and exceptional stretch fit
Seamless construction means extra comfort
Lighter weight on side and back
Wide neck opening to fit under short-collared jerseys

010
BLACK

001
WHITE

MEDIO BASE LAYER LS

4525526

SIZES	T°RANGE
XS S M L XL XXL	4-14 °C / 39-57 °F
WEIGHT	FIT
211 g	Regular
WATERPROOFNESS	WINDPROOFNESS
None	None

Medium insulation and maximum moisture management for cool condtions.

Mid-weight base layer for moderate insulation and excellent moisture management
Soft 100% sanded 190 g polyester stretch fabric
Crew-neck collar

006
MELANGE GRAY

MEDIO BASE LAYER SS

4525527

SIZES	T°RANGE
XS S M L XL XXL	10-18 °C / 50-64 °F
WEIGHT	FIT
183 g	Regular
WATERPROOFNESS	WINDPROOFNESS
None	None

Medium insulation and maximum moisture management for cool condtions.

Mid-weight base layer for moderate insulation and excellent moisture management
Soft 100% sanded 190 g polyester stretch fabric
Crew-neck collar

006
MELANGE GRAY

CASTELLI CYCLING

PRO MESH 2.0 SHORT SLEEVE

4523022

001
WHITE

010
BLACK

SIZES

XS S M L XL XXL

3D mesh fabric for excellent moisture management
Sublimated print graphic
Waist hem stays flat under shorts

CASTELLI CYCLING

PRO MESH 2.0 SLEEVELESS

4523023

001
WHITE

010
BLACK

SIZES

XS S M L XL XXL

3D mesh fabric for excellent moisture management
Sublimated print graphic
Waist hem stays flat under shorts

CASTELLI CYCLING

CORE MESH 3 SS

4517027

001
WHITE

SIZES

S/M L/X XXL

Magic Mesh 90% polyester, 10% Elastane wicking fabric
Minimalist lightweight construction
Reduced seams for maximum comfort

CASTELLI CYCLING

CORE MESH 3 SLEEVELESS

4517028

001
WHITE

SIZES

S/M L/X XXL

Magic Mesh 90% polyester, 10% Elastane wicking fabric
Minimalist lightweight construction
Reduced seams for maximum comfort

MEN'S ACCESSORIES

CASTELL

GLOVES
OVERVIEW

-5°C | 0°C | 7°C

ROSSOCORSA

ESTREMO 2 GLOVE

4526524

T ° RANGE

-5 - 5 °C / 23 - 41 °F

WET ROADS

WINDPROOF

TOUCH SCREEN

YES

TECHNOLOGIES

POLARTEC AirCore™

ESPRESSO 2 GLOVE

4524529

T ° RANGE

3°C - 10°C / 37°F - 50°F

WET ROADS

WINDPROOF

TOUCH SCREEN

YES

TECHNOLOGIES

POLARTEC AirCore™

PRIMALOFT

ROSSOCORSA

PERFETTO ROS 2 GLOVE

4526532

T ° RANGE

4 - 14 °C / 39 - 57 °F

WET ROADS

WINDPROOF

TOUCH SCREEN

YES

TECHNOLOGIES

CDS CASTELLI DAMPING SYSTEM

WINDSTOPPER BY GORE-TEX LABS

ENTRATA THERMAL 3 GLOVE

4526533

T ° RANGE

6-14 °C / 43-57 °F

NONE

WINDPROOF

TOUCH SCREEN

YES

TECHNOLOGIES

PRIMALOFT

7°C

RAIN

15°C

ROSSOCORSA

PERFETTO LIGHT 2 GLOVE

4526523

T ° RANGE

8 - 14 °C / 46 - 57 °F

WET ROADS

WINDPROOF

TOUCH SCREEN

YES

TECHNOLOGIES

CDS CASTELLI DAMPING SYSTEM

WINDSTOPPER BY GORE-TEX LABS

ROSSOCORSA

DO.DI.CI. GLOVE

4526572

T ° RANGE

8 - 15 °C / 46 - 59 °F

WET ROADS

PARTIAL WIND PROTECTION

TOUCH SCREEN

NO

TECHNOLOGIES

CDS CASTELLI DAMPING SYSTEM

CASTELLI RISTRETTO

LIGHTNESS 3 GLOVE

4526525

T ° RANGE

12 - 18 °C / 53 - 64 °F

NONE

NONE

TOUCH SCREEN

NO

TECHNOLOGIES

CDS CASTELLI DAMPING SYSTEM

DILUVIO ONE GLOVE

4523528

T ° RANGE

8°C - 16°C / 46°F - 61°F

LIGHT RAIN

WINDPROOF

TOUCH SCREEN

YES

PERFETTO RoS 2 GLOVE

4526532

SIZES

XS S M L XL XXL

WINDSTOPPER® fabric by GORE-TEX LABS® with reduced seam technology
PFAS-free waterproof ePE membrane
Fleece lined for warmth
Castelli Damping System (CDS) protects median nerve
Neoprene stretch wrist insert for easy on and off
Silicone zones on palm for extra grip
Touchscreen technology at fingertip

010
BLACK

PERFETTO LIGHT 2 GLOVE

4526523

SIZES

XS S M L XL XXL

WINDSTOPPER® fabric by GORE-TEX LABS® with reduced seam technology
PFAS-free waterproof ePE membrane
Light weight for maximum dexterity in mild conditions
Castelli Damping System (CDS) protects median nerve
Reflective details
Silicone zones on palm for extra grip
Touchscreen technology at fingertip

010
BLACK

ESTREMO 2 GLOVE

4526524

SIZES

XS S M L XL XXL

Our warmest cold-weather glove
Polartec® AirCore™ fabric on hand for total wind protection
Fleece liner for warmth
Embossed tone-on-tone scorpion logo on back
Silicone print on palm for better grip
Cuff with velcro closure
Pre-curved construction
Microsuede thumb panel

POLARTEC AirCore™

010
BLACK

ESPRESSO 2 GLOVE

4524529

SIZES

XS S M L XL XXL

Polartec® back of hand is windproof, waterproof, and highly breathable
PrimaLoft® insulation for warmth
Long YKK® zipper for easy on and off
Reflective inserts for added visibility
Touchscreen inserts at fingertips

424
BELGIAN BLUE

010
BLACK

ENTRATA THERMAL 3 GLOVE

4526533

SIZES

XS S M L XL XXL

Windproof stretch outer layer over PrimaLoft® insulation layer
Full lightly brushed inner layer for next-to-skin comfort
Synthetic suede palm with silicone grip texture
Touchscreen index and thumb
Slip-on wrist construction

010
BLACK

DO.DI.CI. GLOVE

4526572

SIZES

XS S M L XL XXL

Next-generation Castelli Ristretto fabric makes the DO.DI.CI. glove perfect for cool to mild conditions
Exclusive Castelli Ristretto technology with engineered air permeability keeps most wind out, allowing in just enough to provide exceptional breathability
Minimalist construction with close-to-hand fit and stretch for speed and comfort
Targeted padding at base of palm for comfort when riding on hoods
Castelli partnered with fabric innovator ITTTAI® to create an exclusive fabric that combines advanced stretch, breathability, and water protection through ITTTAI®'s membrane and lamination expertise

010
BLACK

LIGHTNESS 3 GLOVE.

4526525

SIZES

XS S M L XL XXL

Versatile cool-weather glove for changing seasonal conditions
Thermoflex back of hand for warmth with excellent breathability
Contoured palm for excellent fit and silicone print for optimal grip
Castelli Damping System (CDS) for comfort and control in all conditions
High-stretch cuff for easy on and off

010
BLACK

DILUVIO ONE GLOVE

4523528

SIZES

XS S M L XL XXL

1.5-2mm neoprene insulation to keep your hands warm in wet conditions
Grip print on palm
Touchscreen technology at fingertip
Extended neoprene cuff to keep wind and rain out

010
BLACK

AERO RACE 2 SHOECOVER

4526573

SIZES

S M L XL XXL

Waterproof non-insulated aero bootie for cool and wet conditions
Waterproof PU-coated stretch fabric
Silicone bead at inside top of cuff to seal water out
Waterproof zipper
High-durability material under foot

010
BLACK

001
WHITE

ESPRESSO 2 SHOECOVER

4525559

SIZES

S M L XL XXL

Warm, windproof, and splash resistant for maximum comfort on cold rides
Polartec® AirCore™ insulated microgrid fabric is stretchy and highly breathable
Velcro strap under foot allows fit over road or gravel shoe
Silicone elastic at upper cuff
YKK® rear zipper with zip protector prevents rubbing on Achilles tendon
Reflective trim on back

POLARTEC AirCore™

010
BLACK

PIOGGIA 4 SHOECOVER

4523531

SIZES

S M L XL XXL

Waterproof insulated bootie for all cold and wet conditions
Waterproof PU-coated stretch fabric with fleece inside
Silicone grip at inside top of cuff to seal water out
Wrap cuff construction to optimize fit
Waterproof zipper
High-durability material under foot

ROSSOCORSA

010
BLACK

ESTREMO 2 SHOECOVER

4526526

SIZES

S M L XL XXL

Castelli's warmest shoecover for extreme conditions
Polartec® AirCore™ fabric for windproof water protection with maximum breathability
Thermal lining to keep your feet warm
Reflective details for high visibility
YKK® AquaGuard® zipper
High-durability material under foot

010
BLACK

CASTELLI CYCLING

ENTRATA SHOECOVER

4520539

010
BLACK

SIZES

S M L XL XXL

Warmth and protection for cold weather riding conditions
4 way stretch fabric with DWR and fleece backer
Molded center stretch panel allows easy flexing at ankle
Neoprene cuff for optimal fit

CASTELLI CYCLING

UNLIMITED SHOECOVER

4523530

010
BLACK

SIZES

S M L XL XXL

Warmth and protection for cold-weather riding conditions
4-way-stretch fabric with DWR and fleece backing
Zipper closure and reflective pull for easy on and off
Bottom opening accommodates road, gravel, or MTB shoes
Durable panel wraps around lower part to protect shoecover when walking

CASTELLI CYCLING

DILUVIO UL 2 SHOECOVER

4525560

010
BLACK

SIZES

S/M L/X XXL

2 mm neoprene for dry or wet conditions
Fits over road or gravel shoes
Minimal seams reduce water ingress
Velcro strap under foot to adjust for perfect fit
YKK® waterproof zipper at back
Reflective logo at back

CASTELLI CYCLING

TOE THINGY 3

4526527

010
BLACK

SIZES

UNI

Windproof neoprene protection for your toes
Rugged, rubberized sole with openings for cleats
Can be worn on its own or as a layer between your shoe and shoecover
WARNING: The color of this product may transfer when wet. Avoid prolonged contact with light-colored shoes. Remove after your ride.

VENTI SOFT MERINO SOCK

4525563

SIZES

S/M L/X XXL

Merino wool for warmth, nylon for durability
20 cm cuff height
Castelli's thickest sock for warmth

010
BLACK

424
BELGIAN BLUE

001
WHITE

SCORPION LOGO 20 THERMAL SOCK

4526587

SIZES

S/M L/X XXL

PrimaLoft® yarn for warmth and moisture transfer
Mid-weight, fits comfortably in a cycling shoe
20 cm cuff height

001
WHITE

424
BELGIAN BLUE

010
BLACK

BANDITO 2 MERINO 18 SOCK

4526588

SIZES

S/M L/X XXL

Merino wool blend for warmth and durability
Thin construction like a summer sock for a close fit in the shoe but with the warmth of merino wool
18 cm cuff

001
WHITE

010
BLACK

SWEETSPOT 20 THERMAL SOCK

4526574

SIZES

S/M L/X XXL

PrimaLoft® yarn for warmth and moisture transfer
Mid-weight, fits comfortably in a cycling shoe
20 cm cuff height

065
IVORY/RED

456
TWILIGHT BLUE/BLUE CIRCUIT

501
ULTRAVIOLET/BRILLIANT ORANGE

CASTELLI LOGO 18 MERINO SOCK

4526575

SIZES

S/M L/X XXL

Merino wool blend for warmth and durability
Thin construction like a summer sock for a close fit in the shoe but with the warmth of merino wool
18 cm cuff

870
SILVER GRAY/DARK GRAY

424
BELGIAN BLUE/STEEL FADE

023
RED/WHITE

ESPRESSO 18 SOCK

4525026

SIZES

S/M L/X XXL

Developed to match your Espresso kit
Ideal sock for any ride
Durable and breathable construction
Nylon/elastane mix for optimal comfort and fit
85% nylon, 15% elastane
18 cm cuff

001
WHITE

010
BELGIAN BLUE

010
BLACK

451
METALLIC BLUE

506
GARNET

357
SHADOW

NANO FLEX EVO ARMWARMER

4526120

SIZES

S M L XL

Water-repellent thermal Nano Flex fabric
Flat-lock stitching with single seam
Double-sided silicone grippers to keep warmers in place

NANOFLEX EVO

010
BLACK

NANO FLEX EVO LEGWARMER

4526121

SIZES

S M L XL

Water-repellent thermal Nano Flex fabric
Flat-lock stitching
Double-sided silicone grippers to keep warmers in place

NANOFLEX EVO

010
BLACK

ESPRESSO 2 ARMWARMER

4526528

SIZES

S M L XL

Warm and soft Thermoflex thermal fabric
Single-piece construction to reduce seams
Raw-cut finish at wrist for extra comfort
Silicone gripper at top prevents sliding
Castelli wordmark logo embossed on wrist

294
CLAY

010
BLACK

021
SMOKY GRAY

424
BELGIAN BLUE

ESPRESSO 2 KNEE/LEGWARMER

4526529

SIZES

S M L XL

Warm and soft Thermoflex thermal fabric
Single-piece construction to reduce seams
Silicone gripper at top prevents sliding
Raw-cut finish at bottom for extra comfort
Optimum length allows you to choose between wearing this as a leg warmer or knee warmer

424
BELGIAN BLUE

010
BLACK

021
SMOKY GRAY

CASTELLI CYCLING

PRO SEAMLESS 2 ARM WARMER

4526584

424
BELGIAN BLUE

010
BLACK

SIZES

S/M L/X

Mid-weight seamless arm warmer
Surprisingly warm without causing overheating
Unique polyester/nylon/Lycra® 78%/15%/7% blend
Fully seamless construction
Folds up extra small

CASTELLI CYCLING

PRO SEAMLESS 2 KNEE/LEG WARMER

4526585

424
BELGIAN BLUE

010
BLACK

SIZES

S/M L/X

Mid-weight seamless knee/leg warmer
Surprisingly warm without causing overheating
Unique polyester/nylon/Lycra® 78%/15%/7% blend
Fully seamless construction
Folds up extra small
Multi-use depending on how far the warmer is pulled up the leg: Can be used as a knee warmer if fully pulled up, or a leg warmer if the top is pulled up only to just above the bibshort leg gripper

UPF 50 + LIGHT ARM 3 SLEEVES

4526037

001
WHITE

010
BLACK

SIZES

S M L XL

Solare fabric is highly breathable for sun protection without overheating
UPF 50+ protection
Polyester-based for excellent moisture management
Silicone elastic at top for excellent grip

CASTELLI CYCLING

ESTREMO THERMAL WINTER CAP

4526530

010
BLACK

SIZES

UNI

Polartec® AirCore™ on front blocks wind
Warmer fabric on back for breathability
Cut to fully cover ears for warmth

CASTELLI CYCLING

ESTREMO THERMAL WINTER SKULLY

4526531

010
BLACK

SIZES

UNI

Provides maximum warmth while allowing vapor to quickly escape
Polartec® AirCore™ manages the wind
Warmer fabric on back for comfort and warmth
Fully covers ears

CASTELLI CYCLING

PRO THERMAL 3 SKULLY

4526581

456
TWILIGHT BLUE

010
BLACK

506
GARNET

065
IVORY

SIZES

UNI

Thermoflex is warm, soft, and stretchy
Flat-lock stitching
Reflective detailing on back

CASTELLI CYCLING

PRO THERMAL 3 HEADBAND

4526582

456
TWILIGHT BLUE

010
BLACK

506
GARNET

065

SIZES

UNI

Thermoflex is warm, soft, and stretchy
Flat-lock stitching
Reflective detailing on back

CASTELLI CYCLING

PRO THERMAL 3 NECK WARMER

4526583

010
BLACK

065
IVORY

SIZES

UNI

Thermoflex is warm, soft, and stretchy
Flat-lock stitching
Can be used as neck warmer, bandana, or cap
Flat-lock stitching for comfort

456
TWILIGHT BLUE

506
GARNET

CASTELLI CYCLING

MERINO NECKWARMER

4524535

057
SURF BLUE

075
MILITARY GREEN

SIZES

UNI

Soft merino wool blend for warmth
Flat-lock stitching for comfort

085
LIGHT BLACK

091
BARBARESCO RED

BALACLAVA 2.0

4526534

010
BLACK

SIZES

UNI

Polartec® AirCore™ on front for wind protection
Warmer fleece fabric feels soft and wicks moisture
Feels comfortable under your helmet
The stretchy face opening gives you over-nose, over-mouth, or under-chin coverage options

CASTELLI LOGO WATER BOTTLE

4526045

SIZES

UNI

"Fly Team" water bottle made by Elite
Ultra-thin walls
Soft rubber nozzle delivers fluid fast
Wide-mouth opening for easy filling and cleaning
Weighs just 53 g
550 ml liquid capacity

010
BLACK

001
WHITE

CASTELLI CLOUD WATER BOTTLE

4526046

SIZES

UNI

"Fly Team" water bottle made by Elite
Ultra-thin walls
Soft rubber nozzle delivers fluid fast
Wide-mouth opening for easy filling and cleaning
Weighs just 53 g
550 ml liquid capacity

010
BLACK

021
SMOKY GRAY

SIZE CHARTS

MEN (UNISEX)

		XS	S	M	L	XL	2XL	3XL
Chest	A	88 cm	92 cm	96 cm	100 cm	105 cm	110 cm	115 cm
Waist	B	76 cm	80 cm	84 cm	88 cm	93 cm	98 cm	103 cm
Hips	C	90 cm	94 cm	98 cm	102 cm	107 cm	112 cm	117 cm
Inseam	D	81 cm	82 cm	83 cm	84 cm	85 cm	86 cm	87 cm

SOCKS – Euro shoe size

	S / M	L / XL	2XL
Men's Shoe Size	36-39	40-43	44-47
Women's Shoe Size	35-38	39-41	-

SHOE-COVERS - Euro Shoe size

	S	M	L	XL	2XL
Men	36-39	40-42	43-44	45-46	46-48
Women	35-37	37-39	39-42	-	-

SHOE-COVERS - Diluvio

	S / M	L / XL	2XL
Unisex	36-40	40-44	44-48

WARMERS

SIZE		
S	XS - S	45 - 60 Kg
M	S - M	60 - 70 Kg
L	L - XL	70 - 80 Kg
XL	2XL - 3XL	> 80 Kg

GLOVES MEN

	XS	S	M	L	XL	2XL
Circumference (cm)	< 18,4	18,4-20,3	20,3-22,2	22,2-24,1	24,1-26	> 26

WOMEN

		XS	S	M	L	XL
Chest	A	79 cm	84 cm	89 cm	94 cm	99 cm
Waist	B	63 cm	68 cm	73 cm	78 cm	83 cm
Hips	C	87 cm	92 cm	97 cm	102 cm	107 cm
Inseam	D	75 cm	76 cm	77 cm	78 cm	79 cm

progetto X2 TRANSFER

Pro-level seat pad for maximum comfort. New seamless skin-care layer is softer against the skin and reduces abrasion. Separate saddle-shaped cushioning layer with progressive damping through high-

BRA SIZE CHART (B Cup Sizes)

XS	S	M	L	XL
81-85	86-90	91-95	96-100	101-105
65-69	70-74	75-79	80-84	85-89

KISS air2

High-performance seat pad for all conditions. Single-piece construction with infinitely variable thickness. Updated with more supportive padding and a softer, stretchier fabric next to the skin.

GLOVES WOMEN

	XS	S	M	L	XL
Circumference (cm)	< 16,6	16,6-18,4	18,4-20,2	20,2-22	> 22

KISS TRI

Specifically designed for the triathlete. Minimum bulk doesn't get in the way during the swim and run legs. Extra fast drying foam prevents chafing on the bike.

CASTELLI LOCATIONS

MVC GROUP

Via G. Marconi 81-83 I-32030 Fonzaso (BL) Italy
Telephone: +39 0439 5711 /
Fax: +39 0439 56 436
Email: info@castelli-cycling.com
Website: www.castelli-cycling.com

For other Castelli locations please refer to
castelli-cycling.com

Campagnolo
ALIMENTARI
MOLTENI
52 x 14
KESSELS
ORVAL BIER
EDDY MERCKX
PEPSI-COLA
SPA
SPECIALIZED
gero

CASTELLI CATALOG

FALL WINTER 2026
MEN'S CATALOG

CASTELLI-CYCLING.COM

/ CASTELLI-CYCLING

CASTELLI

GO BACK TO THE TOP ↑

FALL WINTER 2026
WOMEN'S

CASTELLI

GO TO MEN'S CATALOG

WOMEN'S COLLECTION

JACKETS →

PROTECTION →

JERSEYS →

TIGHTS →

UNLIMITED →

365 PRODUCTS →

BASE LAYERS →

ACCESSORIES →

FALL WINTER 2026

OFF-BIKE COLLECTION

MEN'S OFF-BIKE →

WOMEN'S OFF-BIKE →

PHOTOS
Ashley Gruber,
Jered Gruber
Wout Beel,
Federico Ravassard,
Chiara Redaschi,
Federica Muzzi.

FALL WINTER 2026

TRNSTN. TRANSITION. 12° - 20°

The old way of riding was simple: summer gear in summer, winter gear in winter. One moment you were in bibshorts and short sleeves, the next you were bundling up for "winter training." Base miles replaced intensity, and jackets, bibtights, overshoes, and gloves became your new essentials—summer kit retired until next spring.

Today, cycling moves at a different pace. Seasons don't hit like a switch—they transition gradually, giving us a new window of riding: Transition. Temperatures between 12°–20° are too fresh for summer gear, too mild for full thermal layers. It's the perfect zone—long rides, high performance, no compromise.

By adding smarter layers and using modern technologies like Castelli Ristretto, you can ride comfortably and push your limits throughout Transition. It's not winter, it's not summer—it's the sweetspot of the season.

ABUS
CASTELLI
C68
COLNAGO
PIRELLI

project number

001

name

ESPRESSO W

ESPRESSO 2 W LONG SLEEVE JERSEY
4526056 — 053

ESPRESSO 2 W VEST
4526057 — 065

ESPRESSO 2 W DT BIBSHORT
4526051 — 010

ESPRESSO 2 W 12 SOCK
4525063 — 001

project number

002

name

TRANSITION W

TRANSITION AIR W JACKET
4526522 — 065

ESPRESSO 2 W LONG SLEEVE JERSEY
4526056 — 486

ESPRESSO 2 W DT BIBSHORT
4526051 — 010

ESPRESSO 2 W 12 SOCK
4525063 — 001

project number

003

name

DODICI W

DO.DI.CI. W JACKET
4525554 — 268

ESPRESSO 2 W DT BIBSHORT
4526051 — 010

TOE THINGY 3
4526527 — 010

project number

004

name

ULTRA

DO.DI.CI. W JACKET

4525554 — 268

ULTRA W RAIN CAPE

4525567 — 462

ESPRESSO W DT TRNSTN BIBTIGHT

4526545 — 010

WOMEN'S JACKETS

PERFETTO 4 W JACKET

4526563

SIZES	T°RANGE
XS S M L XL	4-12 °C / 39-53 °F
WEIGHT	**FIT**
239 g	Tailored
WATERPROOFNESS	**WINDPROOFNESS**
Light Rain	Front and Back

The jacket that does it all for the modern-day cyclist

The jacket that does it all for the modern-day cyclist
Protects from wind and rain while being highly breathable and stretchy for comfort
Exclusive 219 g Polartec® AirCore™ fabric with electrospun air-permeable membrane gives industry-leading breathability
Lightly insulated for cool conditions, can extend to cold conditions with an extra insulation layer
Chameleon-taped shoulder seams for extra rain protection
Top- and bottom-opening YKK® Vislon® zipper for easy sliding, covered for additional wind and rain protection
3 rear pockets with drain holes
Reflective Rosso Corsa label features on the center pocket
Longer drop tail with reflective stripe for coverage from wheel spray
Membrane and all fabrics are PFAS-free

081
HIBISCUS

010
BLACK

456
TWILIGHT BLUE

THE BENCHMARK FOR ALL-CONDITION PERFORMANCE.

When conditions change, Perfetto 4 leads.

The project started with a blank piece of paper in the Castelli product development office and a curious question, "What does the modern day cyclist really need to achieve maximum performance in cold conditions?"

We pushed our partners Polartec® to go beyond, and together we have developed a fabric technology with the modern day cyclist at its core. Polartec® AirCore™ - the revolutionary PFAS Free, Electrospun, Semi-Air-Permeable membrane protects cyclists who ride in cool conditions with the possibility of light showers. With our continued focus on improvement, we introduce the exclusive Polartec® AirCore™ fabric in a new 219g weight, meaning the Perfetto 4 now gives extra warmth and protection.

The Perfetto Jacket has always been instantly identifiable on the road. The iconic shoulder taping has been updated with a modern look and feel, using a transparent chameleon tape projecting the main body fabric through. The Polartec® AirCore™ fabric works harder and smarter, the more effort you are applying to your ride. And so the iconic Perfetto zippered ventilation openings are no longer a requirement. The Perfetto 4 Jacket features a re-imagined ergonomic splash tail, effectively guarding the rider against road spray. With a nostalgic nod to our very first original Gabba, we have added metal drainage holes to the rear pockets.

For the cyclist seeking maximum performance the Perfetto 4 Jacket adds complete comfort.

Polartec® AirCore™
219g

ALPHA 150 W JACKET

4525531

SIZES	T°RANGE
XS S M L XL	-2-10 °C / 28-50 °F
WEIGHT	FIT
342 g	Tailored
WATERPROOFNESS	WINDPROOFNESS
Light Rain	Front and Back

The best cold weather jacket. Polartec® AirCore™ outer layer keeps out wind and rain while remaining highly breathable. Polartec® Alpha™ inside adds insulation.

The best jacket for cold to very cold conditions
Outer layer made from Castelli's exclusive 150 g Polartec® AirCore™ electrospun air-permeable membrane gives industry-leading breathability
Polartec® Alpha™ inner liner for significant insulation at extremely light weight with excellent moisture management
Top- and bottom-opening YKK® Vislon® zipper for easy sliding, covered for additional wind and rain protection
Zippered key/money pocket on front side
3 rear pockets
Reflective piping at bottom of pockets

085
LIGHT BLACK/BLACK

506
GARNET/BLACK

357
SHADOW/BLACK

ESPRESSO 2 W JACKET

4526567

SIZES	T°RANGE
XS S M L XL	4-12 °C / 39-53 °F
WEIGHT	FIT
235 g	Regular
WATERPROOFNESS	WINDPROOFNESS
Light Rain	

POLARTEC AirCore™

The Espresso 2 W Jacket welcomes Polartec® AirCore™ technology into the Espresso family.

The jacket that introduces Polartec® AirCore™ fabric to the Espresso product line
Exclusive 219 g Polartec® AirCore™ fabric with electrospun air-permeable membrane gives industry-leading breathability
YKK® Vislon® zipper
Lightly insulated for warmth in wide range of conditions
Protects from wind and light rain while being highly breathable and stretchy for comfort
3 lie-flat back pockets
Engineered waist with raw-cut lie-flat back to keep out cold air
Reflective elastic for added visibility and safety

010
BLACK

506
GARNET

294
CLAY

455
STEEL FADE

LIKE YOUR MORNING ESPRESSO

This jacket is an autopilot choice that does not require overthinking

The Espresso 2 Jacket brings Polartec® Aircore™ technology into the Espresso family for the first time, using the advanced 219 g fabric across the entire garment for consistent warmth, breathability, and all-day comfort. Every detail is considered, from the updated logo placement to the refined use of reflective elements that enhance visibility without compromising the clean aesthetic. The result is a jacket that blends cutting-edge performance with a modern design language, ready for everyday winter riding.

espresso
CASTELLI

SWEETSPOT W JACKET

4526571

SIZES	T°RANGE
XS S M L XL	7-15 °C / 44-59 °F
WEIGHT	FIT
229 g	Tailored
WATERPROOFNESS	WINDPROOFNESS
Wet Roads	Front and Back

The Sweetspot W Jacket is for when the temperature drops but the intensity of the ride remains high.

Ristretto technology for unparalleled breathability, warmth, and dryness
Ristretto Lite fabric technology with PFAS-free DWR treatment
Top- and bottom-opening YKK® Vislon® easy-sliding zipper
3 lie-flat pockets, with 4th zippered security pocket for valuables
Engineered waist with ergonomic splash tail to protect from wheel spray
Castelli partnered with fabric innovator ITTTAI® to create an exclusive fabric that combines advanced stretch, breathability, and water protection through ITTTAI®'s membrane and lamination expertise

010
BLACK

455
STEEL FADE/NIGHT SHADE

625
DEEP BORDEAUX

ENTRATA 2 W JACKET

4525534

SIZES	T°RANGE
XS S M L XL	6-15 °C / 43-59 °F
WEIGHT	FIT
369 g	Regular
WATERPROOFNESS	WINDPROOFNESS
Wet Roads	Front/Sleeves

POLARTEC

Made for cool conditions with wind proof sleeves and front combined with maximum breathability Warmer fleece fabric on the back.

Mid-weight jacket for cool to cold conditions with full front protection and thermal back for breathability
Front of chest and sleeves made from Castelli's exclusive 298 g Polartec® AirCore™ electrospun air-permeable membrane gives industry-leading breathability
Stretch polyester fleece Warmer fabric on back for extra breathability
YKK® Vislon® zipper for easy sliding
3 rear pockets
Reflective piping at bottom of pocket for visibility

065
IVORY/SILVER MOON

085
LIGHT BLACK/DARK GRAY

502
NIGHT SHADE/PURPLE MIST

506
GARNET/SILVER GRAY

DO.DI.CI. W JACKET

4525554

SIZES	T°RANGE
XS S M L XL	8-15 °C / 46-59 °F
WEIGHT	FIT
268 g	Race
WATERPROOFNESS	WINDPROOFNESS
Wet Roads	Front and Back

The ultimate jacket for higher intensity rides in cool conditions. Castelli Ristretto technology allows a small amount of air to come in and evaporate sweat, 12 times more than previous technology.

Next-generation breathability in a stretch jacket that blurs the line between a jersey and a jacket, for cool to mild conditions
Exclusive Castelli Ristretto technology with engineered air permeability keeps most wind out, allowing in just enough to provide exceptional breathability — 12 times more than previous Castelli Perfetto jackets
Close-to-body stretch race fit doesn't feel constricting, thanks to Ristretto stretch fabrics
Minimalist construction for speed and comfort
YKK® Vislon® zipper for easy sliding
3 rear pockets
Reflective piping at bottom of pocket for visibility
Castelli partnered with fabric innovator ITTTAI® to create an exclusive fabric, combining advanced stretch, breathability, and water protection through ITTTAI®'s membrane and lamination expertise

085
LIGHT BLACK

268
CHESTNUT

065
IVORY

PERFETTO 2 W VEST

4526589

SIZES	T°RANGE
XS S M L XL	10-18 °C / 50-64 °F
WEIGHT	FIT
110 g	Tailored
WATERPROOFNESS	WINDPROOFNESS
Wet Roads	Front

This vest is made for when you need warmth for the entire ride.

Mid-weight vest for cool temperatures provides moderate insulation with excellent breathability
Castelli Ristretto Lite fabric technology for unparalleled breathability, warmth, and dryness with PFAS-free DWR treatment
Stretch woven back for stretch with excellent breathability
Top- and bottom-opening YKK® Vislon® easy-sliding zipper
3 lie-flat pockets with security lip inside
Castelli partnered with fabric innovator ITTTAI® to create an exclusive fabric that combines advanced stretch, breathability, and water protection through ITTTAI®'s membrane and lamination expertise

288
BRILLIANT PINK

010
BLACK

456
TWILIGHT BLUE

WOMEN'S PROTECTION

cervelo

GABBA R W JACKET

4524576

SIZES	T°RANGE
XS S M L XL	4-18 °C / 39-64 °F
WEIGHT	FIT
170 g	Race
WATERPROOFNESS	WINDPROOFNESS
Fully Waterproof	Front/Sleeves

ROSSOCORSA

The next generation of Foul Weather Race Equipment has arrived. The Gabba R is more protective and more aerodynamic than ever before. It's made to keep up with the demands of the pro peloton, where every watt counts. It's tested in the wind tunnel as our fastest jacket, so you know you aren't sacrificing any speed in order to stay dry.

Castelli Stretch Microshell 2-layer ultralight waterproof breathable fabric with PFC-free external microporous polyurethane membrane
Stretch wrist closure to keep water out
YKK® Vislon® waterproof zipper
Full taped seams for total waterproof construction
3 rear mesh pockets
Drop tail with reflective stripe
Castelli partnered with fabric innovator ITTTAI® to create an exclusive fabric, combining advanced stretch, breathability, and water protection through ITTTAI®'s membrane and lamination expertise.

010
BLACK

ULTRA W RAIN CAPE

4525567

SIZES	T°RANGE
XS S M L XL	4-18 °C / 39-64 °F
WEIGHT	FIT
167 g	Tailored
WATERPROOFNESS	WINDPROOFNESS
Fully Waterproof	Front and Back

POLARTEC

Waterproof packable jacket made with Polartec® Power Shield™ RPM two-layer stretch fabric. The full protection waterproof shell that can fit over a jacket, or just over a jersey for unexpected summer rain.

Waterproof packable jacket
2-layer stretch form-fit Polartec® Power Shield™ RPM fabric
PFAS-free and PFC-free DWR treatment
Taped seams to keep water out
Long tail for added protection from wheel spray
Packs into internal pocket for easy carrying when on the bike
YKK® zipper for easy use
Reflective piping for added visibility
Contains recycled fibers and can be recycled

010
BLACK/SILVER REFLEX

462
BLUE CIRCUIT/SILVER REFLEX

CASTELLI
DOGMA
PINARELLO

EMERGENCY 3 W RAIN JACKET

4525535

SIZES	T°RANGE
XS S M L XL	5-18 °C / 41-64 °F
WEIGHT	FIT
216 g	Regular
WATERPROOFNESS	WINDPROOFNESS
Fully Waterproof	Front and Back

For emergency use under the unexpected downpour, or all day use on a rainy day. It's water and wind proof, and moderately packable. 3 layer fabric is comfortable against skin.

Fully waterproof 3-layer shell jacket, highly packable, with performance stretch fit
New Castelli 3-layer Deluge fabric with 20,000 mm water column is thin and light for packability
Knit polyester layer inside is comfortable next to skin
Fit is close to body but not tight, and the fabric's stretch makes sure it doesn't bind
Highly packable to fit into a jersey pocket or bikepacking bag
All-day water protection with taped seams
360° reflectivity
Waterproof zipper

034
BRILLIANT ORANGE

085
LIGHT BLACK

001
WHITE

SQUALL SHELL W JACKET

4524539

SIZES	T°RANGE
XS S M L XL	4-18 °C / 39-64 °F
WEIGHT	FIT
94 g	Regular
WATERPROOFNESS	WINDPROOFNESS
Fully Waterproof	Front/Sleeves

Made to take with you on days when it looks like rain, but it's lightweight and packable so you can take it on every ride just in case. This jacket is designed to keep you dry in case of a shower or to take the chill off when you descend from the mountains.

Lightweight construction for packability
Stretch 2-layer fabric with waterproof membrane
Taped seams
Reflective stripe on back for added visibility
Elastic at wrist and waist to keep out water and cold air

870
SILVER GRAY/BLACK

085
LIGHT BLACK/SILVER GRAY

ARIA SHELL 2 W JACKET

4526072

SIZES	T°RANGE
XS S M L XL	10-18 °C / 50-64 °F
WEIGHT	FIT
95 g	Tailored
WATERPROOFNESS	WINDPROOFNESS
	Front/Sleeves

An extremely light and packable wind shell that fits close to body, with stretch breathability panels, allowing you extend the temperature range of your favorite Castelli pieces.

Ultralight windproof woven microfiber front and back
Striped mesh fabric at sides and back of sleeves is stretchy to prevent fabric flapping in wind
Folds up extremely small
Integrated stuff sack
YKK® Vislon® top- and bottom-opening zipper
Reflective Castelli logos

030
DARK GRAY

870
SILVER GRAY

424
BELGIAN BLUE

294
CLAY

625
DEEP BORDEAUX

ARIA 2 W VEST

4526073

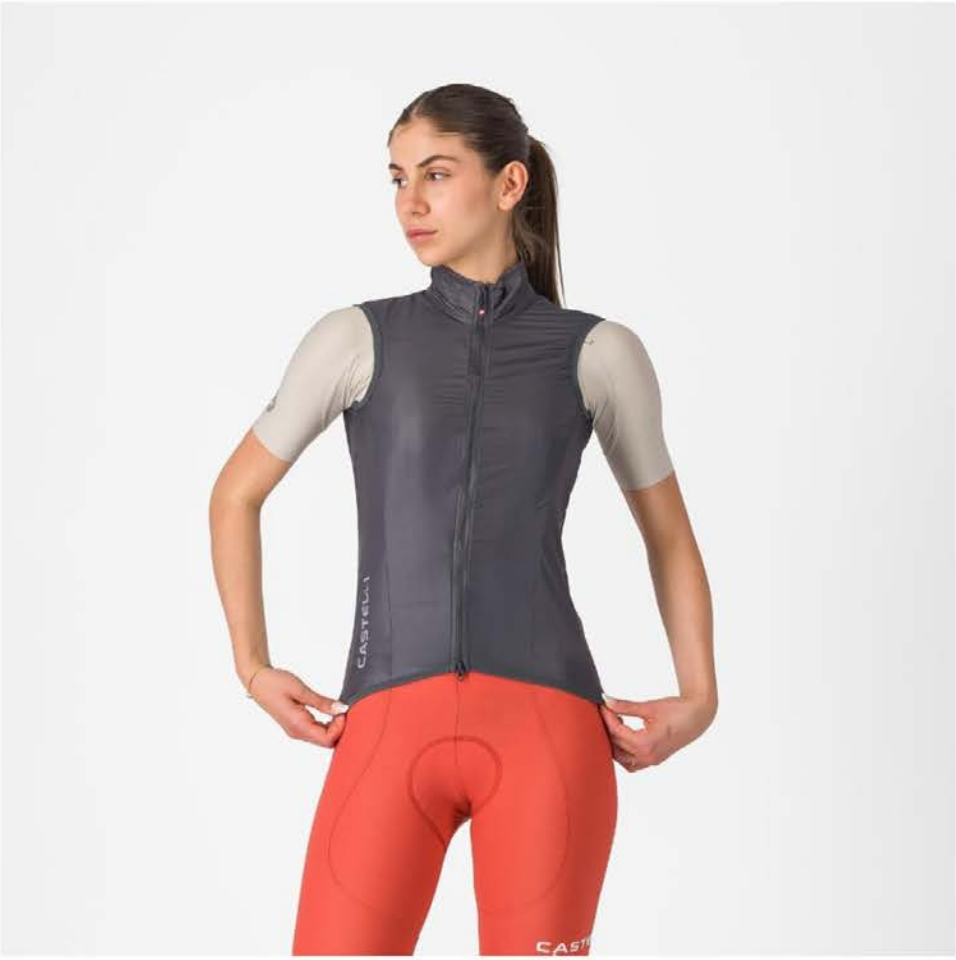

SIZES	T°RANGE
XS S M L XL	10-18 °C / 50-64 °F
WEIGHT	FIT
85 g	Tailored
WATERPROOFNESS	WINDPROOFNESS
	Front

Ultralight and packable wind vest that fits close to body with a stretch breathable back. It effectively blocks wind on the front without causing overheating.

Ultralight windproof woven microfiber front
Striped mesh fabric at sides and back is stretchy to prevent fabric flapping in wind
Folds up extremely small
Integrated stuff sack
YKK® Vislon® top- and bottom-opening zipper
Reflective Castelli logos

424
BELGIAN BLUE

625
DEEP BORDEAUX

870
SILVER GRAY

294
CLAY

030
DARK GRAY

TRANSITION AIR W JACKET

4526522

SIZES	T°RANGE
XS S M L XL	10-18 °C / 50-64 °F
WEIGHT	FIT
94 g	Tailored
WATERPROOFNESS	WINDPROOFNESS
	Front and Back

The Transition Air W Jacket is lightweight, easy to throw on, and designed to elevate whatever you're wearing on the bike.

Microfiber 20 denier nylon fabric is essentially windproof with engineered Castelli Ristretto-level air permeability
Ergonomic cut for perfect fit
High collar to keep drafts out
Top- and bottom-opening zipper with branded Castelli scorpion puller
Reflective Castelli wordmark and scorpion logo on back for low-light visibility
Elasticated cuffs and waist for a clean silhouette, secure fit, and effortless styling on and off the bike

021
SMOKY GRAY

010
BLACK

065
IVORY

WOMEN'S JERSEYS

THERMOWOVEN W LS JERSEY

4526538

SIZES	T°RANGE
XS S M L XL	12-18 °C / 53-64 °F
WEIGHT	FIT
158 g	Tailored
WATERPROOFNESS	WINDPROOFNESS

The ultimate expression of performance in a thermal long-sleeve jersey.

Precision stretch-woven fabric for warmth, comfort, and perfect fit
3 rear pockets, with 4th zippered security pocket for valuables
Full-length YKK® Vislon® zipper with easy-use zipper pull
Elastic at waist with silicone to keep jersey in place

053
SILVER MOON

010
BLACK

MET
DINARELLO

ESPRESSO THERMAL 2 W JERSEY

4526565

SIZES	T°RANGE
XS S M L XL	12-18 °C / 53-64 °F
WEIGHT	FIT
216 g	Tailored
WATERPROOFNESS	WINDPROOFNESS

Warm, soft, and comfortable — the essentials of any great thermal jersey.

Extra soft and warm fleece-lined fabric with stretch for comfort and perfect fit
3 back pockets, with 4th zippered security pocket for valuables
Full-length YKK® Vislon® zipper with easy-use zipper pull
Elastic at waist with silicone to keep jersey in place
Reflective tab for added visibility

502
NIGHT SHADE

455
STEEL FADE

506
GARNET

110
BLACK/WHITE

ESPRESSO 2 W VEST

4526057

SIZES	T°RANGE
XXS XS S M L XL	12-20 °C / 53-68 °F
WEIGHT	FIT
100 g	Tailored
WATERPROOFNESS	WINDPROOFNESS
None	Front

The perfect vest to match your favorite Espresso kit. Wind protection on front, breathable back, highly packable, 3 pockets, double-opening zipper.

Stretch woven front to allow just enough air through to keep you dry and comfortable
Air_O Stretch fabric on back and sides for breathability, comfort, and perfect fit
3 back pockets
Top- and bottom-opening YKK® zipper
Elastic at waist to keep vest in place

110
BLACK/WHITE

294
CLAY

357
SHADOW

506
GARNET

065
IVORY

SFIDA 3 JERSEY

4525536

SIZES	T°RANGE
XS S M L XL	15-20 °C / 59-68 °F
WEIGHT	FIT
331 g	Regular
WATERPROOFNESS	WINDPROOFNESS
None	None

3D knit main body in this innovative cool weather thermal jersey. Add a vest to cover all your autumn and spring riding.

Warmth and stretch in the ideal foundation thermal jersey for fall and spring riding
Main body in an innovative knit fabric that traps air for warmth, 100% polyester for quick drying
Side panels and shoulders in luxuriously soft high-stretch brushed fleece
Reflective piping below 3 rear pockets
Easy-sliding YKK® Vislon® zipper

455
STEEL FADE

053
SILVER MOON

451
METALLIC BLUE

VENTRA THERMAL JERSEY

4526514

SIZES	T°RANGE
XS S M L XL	14-18 °C / 57-64 °F
WEIGHT	FIT
271 g	Regular
WATERPROOFNESS	WINDPROOFNESS
None	None

Comfort and warmth for cool days with fleeced mid-weight body fabric and high-stretch sleeves.

Mid-weight warmth with excellent moisture management
Main body in a 3D knit fabric that traps air on the inside for warmth
Gripper elastic at waist
3 rear pockets
Easy-sliding YKK® Vislon® zipper

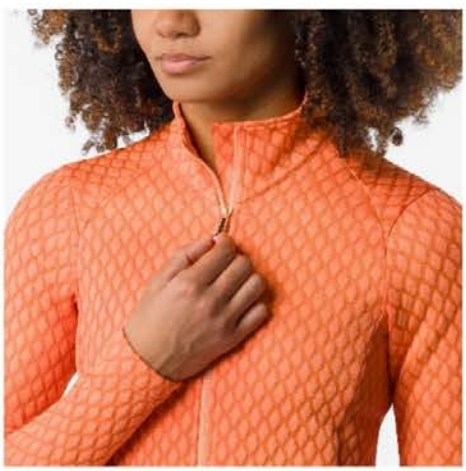

101
BLACK/WHITE

022
PINK FLUO

009
ANTHRACITE

883
MELON

SINERGIA 3 JERSEY FZ

4526570

SIZES	T°RANGE
XS S M L XL	12-18 °C / 53-64 °F
WEIGHT	FIT
264 g	Regular
WATERPROOFNESS	WINDPROOFNESS

The ideal foundation thermal jersey for fall and spring riding. Its warm fabric delivers reliable performance in cooler conditions.

Warmer fabric
Lightweight YKK® Vislon® easy-sliding zipper
3 rear pockets with gripper elastic at waist

790
BRILLIANT YELLOW

473
STEEL BLUE

010
BLACK

025
ROSA GIRO

456
TWILIGHT BLUE

PRISMATIC THERMAL LS JERSEY

4526536

SIZES	T°RANGE
XS S M L XL	14-18 °C / 57-64 °F
WEIGHT	FIT
189 g	Tailored
WATERPROOFNESS	WINDPROOFNESS

Comfort and warmth for cool days with fleeced mid-weight body fabric and high-stretch sleeves.

Mid-weight warmth with excellent moisture management and performance fit
Main body in a 3D knit 93% polyester / 7% elastane fabric that traps air on the inside for warmth and excellent moisture management
Side panels and sleeves in 80% polyester / 20% fleeced knit for excellent fit and comfort
Gripper elastic at waist
3 rear pockets
Easy-sliding YKK® Vislon® zipper

021
SMOKY GRAY

010
BLACK/DEEP BORDEAUX

CORRETTO W LONG SLEEVE JERSEY

4526054

SIZES	T°RANGE
XS S M L XL	15-30 °C / 59-86 °F
WEIGHT	FIT
170 g	Race
WATERPROOFNESS	WINDPROOFNESS

Espresso + Grappa = Corretto

Race fit — ideal for high-intensity road riding and racing
Summer-weight fabrics with long sleeves are ideal for cool days
Engineered with contrasting fabrics on body and sleeves to optimize comfort in key zones
Sleeve and body fabric optimized for breathability and aerodynamics
Contoured collar construction enhances fit around neck
3 back pockets with fourth zippered security pocket for valuables
Full-length YKK® Vislon® zipper with easy-use zipper pull
Elastic at waist with silicone to keep jersey in place

655
PAPRIKA/WINTER SKY

ESPRESSO 2 W LONG SLEEVE JERSEY

4526056

SIZES	T°RANGE
XXS XS S M L XL	15-30 °C / 59-86 °F
WEIGHT	FIT
147 g	Tailored
WATERPROOFNESS	WINDPROOFNESS

Designed to be your favorite jersey for every ride except race day. Espresso comfort and style, revised and refined. 2.0. Summer-weight fabric for cool days.

Castelli-engineered Air_O Stretch fabric for breathability, comfort, and perfect fit
Summer-weight fabric optimized for breathability and aerodynamics, perfect for cool days
Raw-cut sleeve endings for comfort
3 back pockets with fourth zippered security pocket for valuables
Full-length YKK® Vislon® zipper with easy-use zipper pull
Elastic at waist with silicone to keep jersey in place
UPF 30

053
SILVER MOON

486
WINTER SKY

WOMEN'S TIGHT

SORPASSO PRO W DT BIBTIGHT

4526541

SIZES	T°RANGE
XS S M L XL	0-12 °C / 32-53 °F
WEIGHT	FIT
253 g	Tailored
WATERPROOFNESS	WINDPROOFNESS
Wet Roads	None

The Sorpasso Pro W DT Bibtight stands as the definitive winter tight: sleek, fast, and ready for whatever the season brings.

The bibtight that does it all for the modern-day cyclist
Anatomic shaping at hips and knees
Drop Tail stretch bib straps for comfort and easy nature breaks
Progetto X2 Air Donna seamless seat pad for long-distance comfort
Zipperless ankle to reduce bulk
Reflective inserts for maximum visibility from behind
Embossed Castelli wordmark logo

010
BLACK

espresso
CASTELLI
CASTELLI

THE ESPRESSO OF TIGHTS - COMFORT, PERFORMANCE AND A VARIETY OF COLOR OPTIONS.

The Espresso 2 W DT Bibtight is the ideal tight for most of your winter riding. We set out to make a bibtight that was comfortable and warm so you can enjoy those winter miles. We use our Thermoflex fabric throughout the tight for warmth, stretch, and comfort. The seams are placed for comfort and to avoid irritation. The ankles are a zipperless construction to prevent irritation. This also cuts down on added bulk when you wear a shoecover. We've used the stretch bib straps from the Espresso 2 W DT Bibshort to make sure everything stays in place while keeping you from overheating. The Drop Tail bib construction also makes nature breaks easier. The Progetto X2 Air Donna seamless seat pad keeps you comfortable over long winter miles. Everything we've done on this bibtight is designed to keep you warm and comfortable this winter.

ESPRESSO 2 W DT BIBTIGHT

4526543

SIZES	T°RANGE
XS S M L XL	4-15 °C / 39-59 °F
WEIGHT	FIT
245 g	Tailored
WATERPROOFNESS	WINDPROOFNESS

THERMOFLEX

The best winter bibtight for most of your winter riding.

Thermoflex fabric for warmth, stretch, and comfort
Drop Tail stretch bib straps for comfort and easy nature breaks
Progetto X2 Air Donna seamless seat pad for long-distance comfort
Zipperless ankle to reduce bulk
Reflective tab on back of leg
Embossed logos

268
CHESTNUT

424
BELGIAN BLUE

357
SHADOW

010
BLACK

502
NIGHT SHADE

ESPRESSO 2 W TIGHT

4526544

SIZES	T°RANGE
XS S M L XL	5-15 °C / 41-59 °F
WEIGHT	FIT
238 g	Tailored
WATERPROOFNESS	WINDPROOFNESS

The best winter bibtight for most of your winter riding.

Thermoflex fabric for warmth, stretch, and comfort
High waistband for extra comfort
Progetto X2 Air Donna seamless seat pad for long-distance comfort
Zipperless ankle to reduce bulk
Reflective tab on back of leg
Embossed logos

502
NIGHT SHADE

424
BELGIAN BLUE

010
BLACK

ESPRESSO W DT TRNSTN BIBTIGHT

4526545

SIZES	T°RANGE
XS S M L XL	8-16 °C / 46-60 °F
WEIGHT	**FIT**
245 g	Tailored
WATERPROOFNESS	**WINDPROOFNESS**
None	None

Your new favorite transition product.

Castelli-engineered Espresso Doppio fabric for comfort and perfect fit
Raw-cut leg endings for clean-cut finish
Drop Tail stretch bib straps for comfort and easy nature breaks
Pocket on rear for added storage
Progetto X2 Air Donna seamless seat pad for all-day comfort
Reflective tabs for increased visibility

010
BLACK

294
CLAY

COMPETIZIONE W DT BIBTIGHT

4526569

SIZES	T°RANGE
XS S M L XL	0-12 °C / 32-53 °F
WEIGHT	FIT
285 g	Tailored
WATERPROOFNESS	WINDPROOFNESS
None	None

KISS AIR2

Bibtight that is comfortable in cool to cold conditions.

Extreme comfort for cool- to cold-weather rides, with partial wind-resistant front panel for extended temperature range
Castelli's Core Due front fabric (down to knees), with its tightly knit nylon outer face backed with polyester hollow-core fleece on the inside, blocks more wind while providing excellent insulation and moisture management
Lower legs in Castelli's warm Thermoflex fleece
Seat area and back of legs in 3D knit 80% nylon / 20% elastane for excellent stretch and comfort
KISS Air2 seat pad provides great cushioning without excessive bulk
Raw-cut ankle openings
Drop Tail stretch bib straps for comfort and easy nature breaks

010
BLACK

ENTRATA W BIBTIGHT

4523567

SIZES	T°RANGE
XS S M L XL	6-14 °C / 43-57 °F
WEIGHT	FIT
244 g	Regular
WATERPROOFNESS	WINDPROOFNESS

KISS AIR2

"Less is more" is the concept behind this tight. With quality fabrics, a soft seat pad, and reduced seam patterning, this tight simply keeps you warm and comfortable on all but the coldest days.

Thermoflex fabric for warmth and comfort
KISS Air2 Donna seat pad gives great cushioning without excessive bulk
Mesh bib straps
Ankle zippers for easy on/off
Reflective panel below knee

010
BLACK

ENTRATA W TIGHT

4523550

SIZES	T°RANGE
XS S M L XL	6-12 °C / 43-54 °F
WEIGHT	FIT
258 g	Regular
WATERPROOFNESS	WINDPROOFNESS

For the rider who doesn't want bib straps, here's the performance waist tight. With quality fabrics, a soft seat pad, and reduced seam patterning, this tight simply keeps you warm and comfortable on all but the coldest days.

Thermoflex fabric for warmth and comfort
KISS Air2 Donna seat pad gives great cushioning without excessive bulk
Lie-flat elastic waist
Ankle zippers for easy on/off
Reflective panel below knee

010
BLACK

ENTRATA W BIBKNICKER

4524547

SIZES	T°RANGE
XS S M L XL	6-16 °C / 43-61 °F
WEIGHT	FIT
239 g	Tailored
WATERPROOFNESS	WINDPROOFNESS

KISS AIR²

"Less is more" is the concept behind this knicker. With quality fabrics, a soft seat pad, and reduced seam patterning, the knicker simply keeps you warm and comfortable on all but the coldest rides.

Thermoflex fabric for warmth and comfort
KISS Air2 Donna seat pad gives great cushioning without excessive bulk
Mesh bib straps
Elastic at leg ending to prevent riding up

010
BLACK

POLARE 2 W BIBTIGHT

4525540

SIZES	T°RANGE
XS S M L XL	-5-5 °C / 23-41 °F
WEIGHT	FIT
343 g	Regular
WATERPROOFNESS	WINDPROOFNESS
Wet Roads	Front

For your coldest rides with Polartec® AirCore™ front panel and Thermoflex back and the comfort of the KISS Air2 Donna seamless pad.

The warmest tight for riding in below-freezing conditions
Full Polartec® AirCore™ front for total wind protection
Thermoflex fleece on seat and back of leg for extra warmth and stretch
Mesh bibs don't hold moisture
KISS Air2 seat pad provides great cushioning without excessive bulk
High-visibility reflective stripes above knee in front and above calf on back
Ankle zips for easy on/off

010
BLACK

WOMEN'S UNLIMITED

FLY DIRECT W JACKET

4524536

SIZES	T°RANGE
XS S M L XL	0-12 °C / 32-54 °F
WEIGHT	FIT
212 g	Regular
WATERPROOFNESS	WINDPROOFNESS
Light Rain	Front/Sleeves

POLARTEC® Alpha®

Lightweight FLY construction with Polartec® Alpha® Direct insulation creates a warm winter jacket that is packable for variable conditions and long bike adventures.

Super-lightweight construction with amazing warmth, protection, and packability
Ultralightweight windproof microfiber woven outer shell with DWR treatment
Polartec® Alpha® Direct insulation for maximum loft and insulation with minimal bulk
Top- and bottom-opening YKK® Vislon® zipper
3 back pockets
Reflectivity at waist and wrists for added visibility

659
LAVA RED

FLY DIRECT W VEST

4525057

SIZES	T°RANGE
XS S M L XL	10-19 °C / 50-66 °F
WEIGHT	FIT
148 g	Regular
WATERPROOFNESS	WINDPROOFNESS
	Front

POLARTEC Alpha

Packable lightweight thermal vest with Polartec® Alpha® Direct insulation.

Super-lightweight construction with amazing warmth, protection, and packability
Ultralightweight windproof microfiber woven outer shell with DWR treatment
Polartec® Alpha® Direct insulation for maximum loft and insulation with minimal bulk
Top- and bottom-opening YKK® Vislon® zipper
3 back pockets
Reflectivity at waist for added visibility

659
LAVA RED

UNLIMITED W DT BIBTIGHT

4525543

SIZES	T°RANGE
XS S M L XL	4-16 °C / 39-61 °F
WEIGHT	FIT
272 g	Regular
WATERPROOFNESS	WINDPROOFNESS
None	None

Fabrics and seat pad like the Espresso Bibtight but with the added convenience of side pockets. Thermoflex fabric is good for cool to cold conditions.

The perfect comfort warm tight for everything but the coldest winter rides
Thermoflex fabric for warmth, stretch, and comfort
Drop Tail bib strap system permits bathroom breaks without removing jacket or jersey
Mesh pockets on side of each leg
Progetto X2 Air seamless seat pad for long-distance comfort
Zipperless ankle to reduce bulk
Reflective tab on back of leg

010
BLACK

WOMEN'S 365 PRODUCTS

ASTELLI
PINARELLO

CASTELLI CYCLING

PREMIO EVO W DT BIBSHORT

4525039

010
BLACK

SIZES

XS S M L XL

Gradient-stretch woven fabric for the right support in the right place
Woven fabric weighs 30% less than comparable knit fabric
Soft, stretchy elastic bib straps with drop-tail design for easy nature breaks
Integrated gripper elastic at leg ending holds short in place without need for additional silicone grippers
Progetto X2 Air Seamless Donna seat pad

CASTELLI CYCLING

FREE AERO RACE S W BIBSHORT

4525041

010
BLACK

SIZES

XS S M L XL

Aero-optimized Forza2 Stretch fabric for maximum comfort and aerodynamic advantage
Aero-optimized fabric delivers 3% decrease in CdA
Drop Tail stretch bib straps for comfort and easy nature breaks
Silicone leg grippers to keep the leg endings in place
Progetto X2 Air Seamless Donna seat pad for comfort even on your longest rides
Back pocket for extra storage or race radio
Short fabric rated to 50+ UPF protection

CASTELLI CYCLING

ESPRESSO 2 W DT BIBSHORT

4526051

010
BLACK

SIZES

XXS XS S M L XL

Castelli-engineered Espresso Doppio fabric for comfort and perfect fit
Raw-cut leg endings with silicone grippers
Drop Tail stretch bib straps for comfort and easy nature breaks
Progetto X2 Air Seamless Donna seat pad for all-day comfort
Extended front and rear panels with folded lightweight mesh for smoother interface with jersey
Designed for improved comfort and coverage where bibshort and jersey meet

CASTELLI CYCLING

ESPRESSO 2 W SHORT

4526112

010
BLACK

SIZES

XXS XS S M L XL

CASTELLI CYCLING

ENDURANCE W BIBSHORT

4522048

010
BLACK

SIZES

XS S M L XL

Endurance Evolution fabric provides optimum muscle support and feels drier in nearly all conditions
Anatomic cut for perfect on-bike fit
Bib straps can cross in front or back and are extra elastic, allowing short to be pulled down for pee stops without removing bibs
Women's-specific Progetto X2 Air Donna seamless seat pad for even greater comfort and improved airflow
GIRO3 leg grippers lie flat

CASTELLI CYCLING

ENDURANCE W SHORT

4522049

010
BLACK

SIZES

XS S M L XL

Endurance Evolution fabric provides optimum muscle support and feels drier in nearly all conditions
Anatomic cut for perfect on-bike fit
Soft elastic at waist lies flat without binding
Women's-specific Progetto X2 Air Donna seamless seat pad for even greater comfort and improved airflow
GIRO3 leg grippers lie flat

CASTELLI CYCLING

PRIMA 2 DT BIBSHORT

4525044

010
BLACK/BLACK

SIZES

XS S M L XL

Pro2 Dry Soft fabric feels amazing on the skin and supremely comfortable
Anatomic construction for perfect fit
Lie-flat leg back with silicone gripper
Soft, stretchy elastic bib straps with drop-tail design for easy nature breaks
KISS Air 2 Donna seat pad
Color inserts to match your favorite jersey
Reflective tabs for safety

KISS AIR 2

CASTELLI CYCLING

PRIMA 2 SHORT

4525045

010
BLACK/BLACK

SIZES

XS S M L XL

Pro2 Dry Soft fabric feels amazing on the skin and supremely comfortable
Anatomic construction for perfect fit
Lie-flat leg back with silicone gripper
KISS Air 2 Donna seat pad
Color inserts to match your favorite jersey
Reflective tabs for safety

KISS AIR 2

WOMEN'S BASE LAYERS

CASTELLI
POLARTEC

COLD DAYS W 2nd LAYER

4526590

SIZES	T°RANGE
XS S M L XL	-8-5 °C / 17-41 °F
WEIGHT	FIT
167 g	Regular
WATERPROOFNESS	WINDPROOFNESS

Maximum insulation and moisture management for cold rides, to layer between a base layer and a jacket.

Polartec® Alpha® 90 high-loft active insulation fabric made from recycled PET
Maximum breathability
Asymmetrical zip
High collar

010
BLACK

COLD DAYS 2ND LAYER W VEST

4526546

SIZES	T°RANGE
XS S M L XL	-4-10 °C / 24-50 °F
WEIGHT	FIT
122 g	Regular
WATERPROOFNESS	WINDPROOFNESS

POLARTEC® Alpha®

Maximum insulation and moisture management for cold rides, to layer between a base layer and a jacket.

Polartec® Alpha® 90 high-loft active insulation fabric made from recycled PET
Maximum breathability
Asymmetrical zip
High collar

010
BLACK

FLANDERS 2 WARM W LONG SLEEVE

4525545

SIZES	T°RANGE
XS S M L XL	-2-10 °C / 28-50 °F
WEIGHT	FIT
195 g	Regular
WATERPROOFNESS	WINDPROOFNESS
None	None

Our warmest base layer with mid height collar.

Warm fleece base layer with mid-height neck for cold conditions
SottoZero Fleece multi-denier 100% polyester fabric
Flat Merrow stitching
Mesh armpit insert

008
GRAY

010
BLACK

MERINO SEAMLESS W BASELAYER

4524555

SIZES	T°RANGE
S/M L/X	-4-10 °C / 25-50 °F
WEIGHT	FIT
171 g	Regular
WATERPROOFNESS	WINDPROOFNESS

Merino wool blend
Seamless construction for comfort and fit
Machine washable
Low collar

010
BLACK

MEDIO BASE LAYER W LONG SLEEVE

4525546

SIZES	T°RANGE
XS S M L XL	4-14 °C / 39-57 °F
WEIGHT	FIT
182 g	Regular
WATERPROOFNESS	WINDPROOFNESS
None	None

Medium insulation and maximum moisture management for cool condtions.

Mid-weight base layer for moderate insulation and excellent moisture management
Soft 100% sanded 190 g polyester stretch fabric
Crew-neck collar

006
MELANGE GRAY

MEDIO BASE LAYER W SHORT SLEEVE

4525547

SIZES	T°RANGE
XS S M L XL	10-18 °C / 50-64 °F
WEIGHT	FIT
145 g	Regular
WATERPROOFNESS	WINDPROOFNESS
None	None

Medium insulation and maximum moisture management for cool condtions.

Mid-weight base layer for moderate insulation and excellent moisture management
Soft 100% sanded 190 g polyester stretch fabric
Crew-neck collar

006
MELANGE GRAY

CASTELLI CYCLING

PRO MESH W SHORT SLEEVE

4524076

001
WHITE

010
BLACK

SIZES

XS S M L XL

3D mesh fabric for excellent moisture management
Sublimated print graphic
Waist hem stays flat under shorts

CASTELLI CYCLING

PRO MESH W SLEEVELESS

4524075

001
WHITE

010
BLACK

SIZES

XS S M L XL

3D mesh fabric for excellent moisture management
Sublimated print graphic
Waist hem stays flat under shorts

ROSSO CORSA BRA

4518550

001
WHITE

010
BLACK

SIZES

XS S M L XL

Superlight stretch fabric perfect for cycling
Mesh inserts for extreme breathability keep you cool and dry
Back hook-and-eye closure with 3-position regulation for easy on and off
Molded cups with full coverage
Medium support thanks to contoured seams and underbust elastic for enhanced fit and support

WOMEN'S ACCESSORIES

PERFETTO RoS 2 W GLOVE

4526553

SIZES

S M L XL

WINDSTOPPER® fabric by GORE-TEX LABS® with reduced seam technology
PFAS-free waterproof ePE membrane
Fleece lined for warmth
Castelli Damping System (CDS) protects median nerve
Neoprene stretch wrist insert for easy on and off
Silicone zones on palm for extra grip
Touchscreen technology at fingertip

ROSSO CORSA

WINDSTOPPER BY GORE-TEX LABS

010
BLACK

ESPRESSO 2 W GLOVE

4524557

SIZES

XS S M L XL

Polartec® back of hand is windproof, waterproof, and highly breathable
PrimaLoft® insulation for warmth
Long YKK® zipper for easy on and off
Reflective inserts for added visibility
Touchscreen inserts at fingertips

010
BLACK

ESPRESSO 2 W SHOECOVER

4525561

SIZES

S M L

Warm, windproof, and splash resistant for maximum comfort on cold rides
Polartec® AirCore™ insulated microgrid fabric is stretchy and highly breathable
Velcro strap under foot allows fit over road or gravel shoe
Silicone elastic at upper cuff
YKK® rear zipper with zip protector prevents rubbing on Achilles tendon
Reflective trim on back

POLARTEC AirCore™

010
BLACK

CASTELLI CYCLING

DICIOTTO SOFT MERINO W SOCK

4525565

001
WHITE

010
BLACK

SIZES

S/M L/X

Merino wool for warmth, nylon for durability
18 cm cuff height
Castelli's thickest sock for warmth

502
NIGHT SHADE

CASTELLI CYCLING

SCORPION LOGO 15 W THERMAL SOCK

4526586

001
WHITE

010
BLACK

SIZES

S/M L/X

PrimaLoft® yarn for warmth and moisture transfer
Mid-weight, fits comfortably in a cycling shoe
15 cm cuff height

ESPRESSO 2 W 12 SOCK

4525063

001
WHITE

010
BLACK

538
PURPLE MIST

SIZES

S/M L/X

Developed to match your Espresso kit
Ideal sock for any ride
Durable and breathable construction
Nylon/elastane mix for optimal comfort and fit
85% nylon, 15% elastane
12 cm cuff

ORVAL
CATELLV

MEN'S OFF-BIKE

AIRCORE ONE JACKET

4526506

SIZES

XS S M L XL XXL 3XL

Polartec® AirCore™ 150 g fabric provides lightweight, breathable insulation for all-day warmth and comfort
Waterproof 2-way zipper keeps you protected while allowing flexible ventilation
Peaked, shaped hood features an adjustable internal drawstring for a secure fit and added protection
Reflective Castelli logo enhances visibility enhancing clean design
Elasticated cuffs seal out the cold while maintaining comfort and mobility
Internal taped seams provide added protection from the elements for reliable performance
Versatile use for downtime, travel, and transfers between races
Clean, modern silhouette with minimalist lines for a sleek, contemporary look

POLARTEC AirCore™

357
SHADOW

010
BLACK

DOWN PUFFER JACKET

4526547

SIZES

XS S M L XL XXL 3XL

Lightweight, durable, and wind-resistant Pertex® Quantum recycled nylon fabric for all-day comfort
800 fill power duck down
2-way zipper for flexible ventilation and easy on/off access
Elasticated cuffs and hood keep warmth in and cold out while ensuring a snug fit
Tone-on-tone Castelli logo offers subtle branding with a modern, clean look
2 internal pockets provide secure storage for small essentials
2 external zip pockets for convenient access and additional storage on the go

451
METALLIC BLUE

CASTELLI ALPHA FLEECE HOODY

4526084

SIZES

XS S M L XL XXL 3XL

Ultralight technical midlayer made with Polartec® Alpha Direct 90
Offers high breathability, quick-drying performance, and excellent warmth-to-weight ratio
Relaxed drop-shoulder fit
Flat-seam construction
Balaclava-style hood
Ideal for varied conditions

POLARTEC® Alpha®

405
ROCK BLUE

870
SILVER GRAY/DARK GRAY

LOGO HOODY

4526079

SIZES

XS S M L XL XXL 3XL

Designed for recovery days, travel, and time away from the bike
When comfort and identity matter just as much as performance
Relaxed drop-shoulder fit
Castelli wordmark logo
Elasticated ribbed cuff and bottom hem

006
MELANGE GRAY

010
BLACK

LOGO SWEATSHIRT

4526080

SIZES

XS S M L XL XXL 3XL

Designed for recovery days, travel, and time away from the bike
When comfort and identity matter just as much as performance
Relaxed fit
Castelli wordmark logo
Raglan sleeves for additional freedom of movement
Elasticated ribbed cuff and bottom hem

424
BELGIAN BLUE

006
MELANGE GRAY

SLEEVE LOGO LS TEE

4526083

SIZES

XS S M L XL XXL 3XL

Relaxed fit
Castelli wordmark logo
Ribbed collar

001
WHITE

TONE LOGO TEE

4526081

SIZES

XS S M L XL XXL 3XL

Designed for recovery days, travel, and time away from the bike
When comfort and identity matter just as much as performance
Relaxed fit
Castelli wordmark logo
Ribbed collar

001
WHITE

010
BLACK

MILANO 2 PANT

4526085

SIZES

XS S M L XL XXL 3XL

Lightweight stretch woven material for comfort and athletic styling
Front fly with snap closure
Snap button closure at cuffs for easy on and off
2 back welt pockets with zippers
2 side pockets with internal phone pocket

010
BLACK

CASTELLI OFF-BIKE

THERMAL BEANIE
4526549

010
BLACK

424
BELGIAN BLUE

SIZES

UNI

100% acrylic knit
Soft with great stretch for a comfortable fit

CASTELLI OFF-BIKE

BASEBALL CAP
4526111

010
BLACK

SIZES

UNI

100% polyester for wicking and easy cleaning
Adjustable fit

CASUAL SOCK

4526089

010
BLACK

SIZES

S/M L/X XXL

60% polyester / 30% polyamide / 10% elastane
Summer weight

WOMEN'S OFF-BIKE

DOWN PUFFER W JACKET

4526537

SIZES

XS S M L XL

Lightweight, durable, and wind-resistant Pertex® Quantum recycled nylon fabric for all-day comfort
800 fill power duck down
2-way zipper for flexible ventilation and easy on/off access
Elasticated cuffs and hood keep warmth in and cold out while ensuring a snug fit
Tone-on-tone Castelli logo offers subtle branding with a modern, clean look
2 internal pockets provide secure storage for small essentials
2 external zip pockets for convenient access and additional storage on the go

451
METALLIC BLUE

LOGO W SWEATSHIRT

4526104

SIZES

XS S M L XL

Relaxed fit
Castelli wordmark logo
Raglan sleeves for additional freedom of movement
Elasticated ribbed cuff and bottom hem

006
MELANGE GRAY

LOGO W TEE

4526105

SIZES

XS S M L XL

Relaxed drop shoulder
Female-specific cropped fit
Castelli wordmark logo

006
MELANGE GRAY

SIZE CHARTS

MEN (UNISEX)

		XS	S	M	L	XL	2XL	3XL
Chest	A	88 cm	92 cm	96 cm	100 cm	105 cm	110 cm	115 cm
Waist	B	76 cm	80 cm	84 cm	88 cm	93 cm	98 cm	103 cm
Hips	C	90 cm	94 cm	98 cm	102 cm	107 cm	112 cm	117 cm
Inseam	D	81 cm	82 cm	83 cm	84 cm	85 cm	86 cm	87 cm

SOCKS – Euro shoe size

	S / M	L / XL	2XL
Men's Shoe Size	36-39	40-43	44-47
Women's Shoe Size	35-38	39-41	-

SHOE-COVERS - Euro Shoe size

	S	M	L	XL	2XL
Men	36-39	40-42	43-44	45-46	46-48
Women	35-37	37-39	39-42	-	-

SHOE-COVERS - Diluvio

	S / M	L / XL	2XL
Unisex	36-40	40-44	44-48

WARMERS

SIZE		
S	XS - S	45 - 60 Kg
M	S - M	60 - 70 Kg
L	L - XL	70 - 80 Kg
XL	2XL - 3XL	> 80 Kg

GLOVES MEN

	XS	S	M	L	XL	2XL
Circumference (cm)	< 18,4	18,4-20,3	20,3-22,2	22,2-24,1	24,1-26	> 26

WOMEN

		XS	S	M	L	XL
Chest	A	79 cm	84 cm	89 cm	94 cm	99 cm
Waist	B	63 cm	68 cm	73 cm	78 cm	83 cm
Hips	C	87 cm	92 cm	97 cm	102 cm	107 cm
Inseam	D	75 cm	76 cm	77 cm	78 cm	79 cm

progetto X2 TRANSFER

Pro-level seat pad for maximum comfort. New seamless skin-care layer is softer against the skin and reduces abrasion. Separate saddle-shaped cushioning layer with progressive damping through high-

BRA SIZE CHART (B Cup Sizes)

XS	S	M	L	XL
81-85	86-90	91-95	96-100	101-105
65-69	70-74	75-79	80-84	85-89

KISS air2

High-performance seat pad for all conditions. Single-piece construction with infinitely variable thickness. Updated with more supportive padding and a softer, stretchier fabric next to the skin.

GLOVES WOMEN

	XS	S	M	L	XL
Circumference (cm)	< 16,6	16,6-18,4	18,4-20,2	20,2-22	> 22

KISS TRI

Specifically designed for the triathlete. Minimum bulk doesn't get in the way during the swim and run legs. Extra fast drying foam prevents chafing on the bike.

CASTELLI LOCATIONS

MVC GROUP

Via G. Marconi 81-83 I-32030 Fonzaso (BL) Italy
Telephone: +39 0439 5711 /
Fax: +39 0439 56 436
Email: info@castelli-cycling.com
Website: www.castelli-cycling.com

For other Castelli locations please refer to
castelli-cycling.com

Campagnolo
ALIMENTARI
MOLTENI
52 x 14
KESSELS
ORVAL BIER
EDDY MERCKX
PEPSI-COLA
SPA
SPECIALIZED
gero

CASTELLI CATALOG

FALL WINTER 2026
WOMEN'S CATALOG

CASTELLI-CYCLING.COM

/ CASTELLI-CYCLING

CASTELLI

GO BACK TO THE TOP ↑

LEGACY TECH FW26

CASTELLI

SALTO 2 JACKET

4525576

SIZES	T°RANGE
XS S M L XL XXL 3XL	4-14 °C / 39-57 °F
WEIGHT	**FIT**
327 g	Regular
WATERPROOFNESS	**WINDPROOFNESS**
Light Rain	Front and Back

The Windstopper softshell non-insulated jacket for cool conditions over a base layer, extending to very cold conditions over a thermal jersey.

Full WINDSTOPPER® FABRIC TECHNOLOGY BY ? LABS 150 keeps cold and wind out while offering exceptional breathability
Excellent stretch, with neutral fit for extra comfort
Internal elastic with gripper at hem to keep jacket in place
Covered YKK® Vislon® zipper
3 ergonomic rear pockets
Reflective tab on back for added visibility

078
DEEP OCEAN

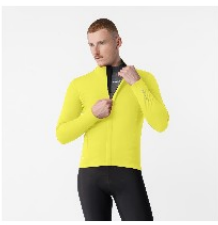

504
ZOLFO

439
CYAN

010
BLACK

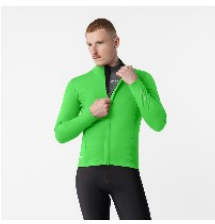

187
GREEN FLUO

424
BELGIAN BLUE

857
RED ORANGE

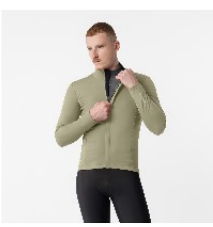

363
GREEN TEA

497
INDIGO BLUE

035
SAUGE GREEN

433
DUST BLUE

ESTREMO 2 JACKET

4525575

SIZES	T°RANGE
XS S M L XL XXL 3XL	-2-10 °C / 28-50 °F
WEIGHT	**FIT**
505 g	Regular
WATERPROOFNESS	**WINDPROOFNESS**
Light Rain	Front and Back

For cold conditions with all-over Windstopper X-Fast warm fleece-lined fabric with front and rear reflective strips.

WINDSTOPPER® FABRIC TECHNOLOGY BY ? LABS X-Fast fabric with fleece backing for warmth
Internal wrist closure for perfect glove interface
YKK® Vislon® zipper
3 large rear pockets
Reflective stripe on chest and on pockets for added visibility

353
OLIVE GREEN

623
BLUEBERRY

518
RASPBERRY VIOLET

023
RED

070
DARK STEEL BLUE

010
BLACK

084
BLUETTE

301
SHRUB GREEN

502
NIGHT SHADE

077
MIRAGE

479
CELESTE

IDEALE JACKET

4526593

SIZES	T°RANGE
XS S M L XL XXL 3XL	8-16 °C / 46-61 °F
WEIGHT	**FIT**
380 g	Regular
WATERPROOFNESS	**WINDPROOFNESS**
Light Rain	Front/Sleeves

This mid-weight jacket is perfect for the changing weather as we enter fall and spring. Enough warmth and protection without overdoing it. A neutral fit and extra reflectivity for added safety.

GORE-TEX INFINIUM™ WINDSTOPPER® X-MID front and sleeves for wind protection with exceptional breathability
Warmer fleece fabric on back for additional breathability
Asymetric YKK® Vislon® zipper
3 rear pockets
Reflective detail on pockets for extra visibility

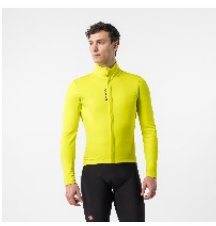

776
SULPHUR

870
SILVER GRAY

080
LUNA GRAY

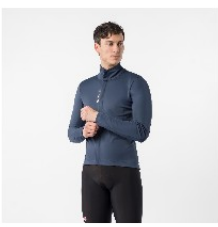

456
TWILIGHT BLUE

034
BRILLIANT ORANGE

304
TARMAC

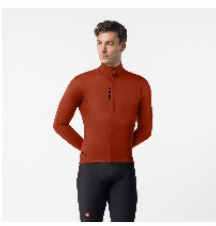

608
RED OCHRE

010
BLACK

SIZE CHARTS

MEN (UNISEX)

		XS	S	M	L	XL	2XL	3XL
Chest	A	88 cm	92 cm	96 cm	100 cm	105 cm	110 cm	115 cm
Waist	B	76 cm	80 cm	84 cm	88 cm	93 cm	98 cm	103 cm
Hips	C	90 cm	94 cm	98 cm	102 cm	107 cm	112 cm	117 cm
Inseam	D	81 cm	82 cm	83 cm	84 cm	85 cm	86 cm	87 cm

SOCKS – Euro shoe size

	S / M	L / XL	2XL
Men's Shoe Size	36-39	40-43	44-47
Women's Shoe Size	35-38	39-41	-

SHOE-COVERS - Euro Shoe size

	S	M	L	XL	2XL
Men	36-39	40-42	43-44	45-46	46-48
Women	35-37	37-39	39-42	-	-

SHOE-COVERS - Diluvio

	S / M	L / XL	2XL
Unisex	36-40	40-44	44-48

WARMERS

SIZE		
S	XS - S	45 - 60 Kg
M	S - M	60 - 70 Kg
L	L - XL	70 - 80 Kg
XL	2XL - 3XL	> 80 Kg

GLOVES MEN

	XS	S	M	L	XL	2XL
Circumference (cm)	< 18,4	18,4-20,3	20,3-22,2	22,2-24,1	24,1-26	> 26

WOMEN

		XS	S	M	L	XL
Chest	A	79 cm	84 cm	89 cm	94 cm	99 cm
Waist	B	63 cm	68 cm	73 cm	78 cm	83 cm
Hips	C	87 cm	92 cm	97 cm	102 cm	107 cm
Inseam	D	75 cm	76 cm	77 cm	78 cm	79 cm

BRA SIZE CHART (B Cup Sizes)

XS	S	M	L	XL
81-85	86-90	91-95	96-100	101-105
65-69	70-74	75-79	80-84	85-89

GLOVES WOMEN

	XS	S	M	L	XL
Circumference (cm)	< 16,6	16,6-18,4	18,4-20,2	20,2-22	> 22

PROGETTO X2

Pro-level seat pad for maximum comfort. New seamless skin-care layer is softer against the skin and reduces abrasion. Separate saddle-shaped cushioning layer with progressive damping through high-

KISS AIR2

High-performance seat pad for all conditions. Single-piece construction with infinitely variable thickness. Updated with more supportive padding and a softer, stretchier fabric next to the skin.

KISS TRI

Specifically designed for the triathlete. Minimum bulk doesn't get in the way during the swim and run legs. Extra fast drying foam prevents chafing on the bike.

CASTELLI LOCATIONS

MVC GROUP

Via G. Marconi 81-83 I-32030 Fonzaso (BL) Italy
Telephone: +39 0439 5711 /
Fax: +39 0439 56 436
Email: info@castelli-cycling.com
Website: www.castelli-cycling.com

For other Castelli locations please refer to
castelli-cycling.com

CASTELLI CATALOG

LEGACY TECH FW26

CASTELLI-CYCLING.COM

/ CASTELLI-CYCLING

CASTELLI

Custom Team Wear

FÜR IHR GESCHÄFT, IHREN VEREIN ODER IHRE KUNDEN: INDIVIDUELLE TEAMBEKLEIDUNG **BEREITS AB CHF 49**

MODELLAUSWAHL – RADSPORT, TRIATHLON ODER LANGLAUF FÜR GROSS UND KLEIN

Umfassende Palette führender italienischer Sportbekleidungshersteller. Helm Personalisierungen sind möglich. Beratung durch ehemalige und aktive Weltklassesportler.

DESIGN

Kreation auf Wunsch mit unseren Grafik-Spezialisten. Farbkombinationen und Logo-platzierungen fast uneingeschränkt möglich.

PRODUKTION

Pünktlich zum Saisonstart. Lieferfristen garantiert – 8 bis 9 Wochen. «Made in Europe». Alle Grössen des Designs sind jederzeit nachbestellbar.

MENGE UND PREISE

Trikots ab CHF 49*
5-teiliges Set ab CHF 199**
Mindestbestellmenge 10 Stück
Datenhandling einmalig CHF 150

GRATIS HELME FÜR DEN NACHWUCHS

Bei jeder Bestellung unterstützen wir die Nachwuchsabteilung mit kostenlosen KASK Junioren Helmen.

POUR VOTRE ENTREPRISE, VOTRE ÉQUIPE OU VOS CLIENTS: VÊTEMENT DE SPORT PERSONALISÉS **À PRITIR DE CHF 49**

MODÈLES AU CHOIX – CYYLISME, TRIATHLON OU SKI DE FOND POUR LES PETITS ET GRANDS

Une gamme complète des meilleurs fabricants italiens de vêtements de sport. Les personnalisations de casques sont possible. Des sportifs actuels et d'anciens sportifs de haut niveau vous conseillent.

DESIGN

Création sur demande dans notre studie de design interne. Les combinaisons de couleurs et l'emplacement des logos sont possible presque sans restriction.

PRODUCTION

Pile à l'heure our l'ouverture de la saison. Délais de livraison garantis – 8 à 9 semaines. «Made in Europe». Le design peutvent être commandé à nouveau à tout moment.

QUANTITÉ ET PRIX

Maillot à partir de CHF 49*
Ensemble à partir de CHF 199**
Qauantité minimal de commande 10 pièces
Traitement de la commande une fois CHF 150

CASQUES GRATUITS POUR LES ATHLÈTES JUNIORS

Avec chaque commande, nous soutenons les athlètes juniors avec des casques juniors KASK gratuits.

CU:AG
SPORTS AG

CUAG SPORTS AG | C/O HOHLE GASSE | ARTHERSTR. 60 | 6405 IMMENSEE | +41412595100 | INFO@CUAGSPORTS.COM | CUAGSPORTS-SHOP.COM

CASTELLI

MEHR INFOS ZU:
CYCLING SERVIZIO CORSE

MEHR INFOS ZU:
TRIATHLON SERVIZIO CORSE

sportful

MEHR INFOS ZU:
LANGLAUF / XC TEAM

MEHR INFOS ZU:
CYCLING TEAM

MEHR INFOS ZU:
TRAINING TEAM

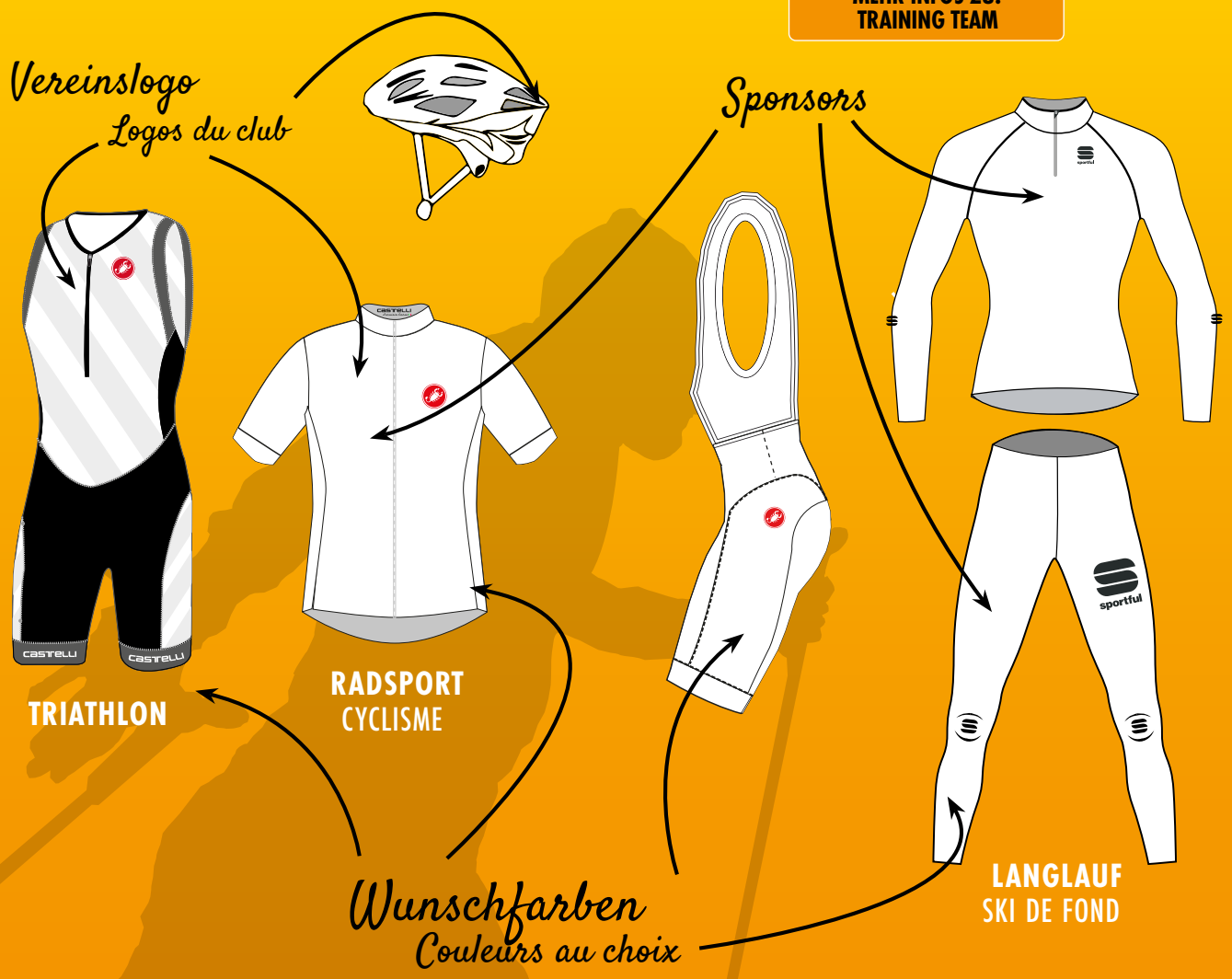

TEAMBEKLEIDUNG AB 10 STÜCK

- Personalisierte Teamtrikots ab **CHF 49**
- 5-teiliges Set ab **CHF 199**
- **Gratis** Helme für den Nachwuchs
- **Gratis** Design im Wert von CHF 2'500

VÊTEMENTS DE SPORT POUR ÉQUIPES, À PARTIR DE 10 PIÈCES

- Maillot d'équipe personnalise à partir de **CHF 49**
- Ensemble de 5 pièce à partir de **CHF 199**
- Casques **gratuits** pour les athlètes juniors
- Design **gratuit** d'une valeur de CHF 2'500

JETZT DESIGN KREIEREN UND PROFITIEREN!
N'HÉSITEZ PLUS ET PROFITEZ MAINTENANT!

CU:AG
SPORTS AG

CUAG SPORTS AG | C/O HOHLE GASSE | ARTHERSTR. 60 | 6405 IMMENSEE | +41412595100 | INFO@CUAGSPORTS.COM | CUAGSPORTS-SHOP.COM

nimbl

SHOES XXVI

EXCEED

nimbl

EXCEED

MODEL	ULTIMATE EXCEED
CLEATS SYSTEM	Three bolt and Speedplay
SOLE GUARD	Less than 2 mm sole stack
SIZE RANGE	37 > 47 and half size
OUTSOLE	New Nimbl® monocoque carbon chassis. 3 bolts and Speedplay options
WEIGHT	175 gr. (Size 43)
INSOLE	EVA
UPPER	1,2 mm Microfiber, supported with memory foam
CLOSURE SYSTEM	Dual side mounted BOA® Fit System Li2 micro-adjustable premium (aluminium) dial

nimbl

EXCEED

MODEL	ULTIMATE EXCEED
CLEATS SYSTEM	Three bolt and Speedplay
SOLE GUARD	Less than 2 mm sole stack
SIZE RANGE	37 > 47 and half size
OUTSOLE	New Nimbl® monocoque carbon chassis. 3 bolts and Speedplay options
WEIGHT	175 gr. (Size 43)
INSOLE	EVA
UPPER	1,2 mm Microfiber, supported with memory foam
CLOSURE SYSTEM	Dual side mounted BOA® Fit System Li2 micro-adjustable premium (aluminium) dial

nimbl

EXCEED

MODEL	ULTIMATE EXCEED
CLEATS SYSTEM	Three bolt and Speedplay
SOLE GUARD	Less than 2 mm sole stack
SIZE RANGE	37 > 47 and half size
OUTSOLE	New Nimbl® monocoque carbon chassis. 3 bolts and Speedplay options
WEIGHT	175 gr. (Size 43)
INSOLE	EVA
UPPER	1,2 mm Microfiber, supported with memory foam
CLOSURE SYSTEM	Dual side mounted BOA® Fit System Li2 micro-adjustable premium (aluminium) dial

nimbl

EXCEED

MODEL	ULTIMATE EXCEED
CLEATS SYSTEM	Three bolt and Speedplay
SOLE GUARD	Less than 2 mm sole stack
SIZE RANGE	37 > 47 and half size
OUTSOLE	New Nimbl® monocoque carbon chassis. 3 bolts and Speedplay options
WEIGHT	175 gr. (Size 43)
INSOLE	EVA
UPPER	1,2 mm Microfiber, supported with memory foam
CLOSURE SYSTEM	Dual side mounted BOA® Fit System Li2 micro-adjustable premium (aluminium) dial

nimbl

EXCEED PRO EDITION

MODEL	ULTIMATE EXCEED PRO EDITION
CLEATS SYSTEM	Three bolt and Speedplay
SOLE GUARD	Less than 2 mm sole stack
SIZE RANGE	37 > 47 and half size
OUTSOLE	New Nimbl® monocoque carbon chassis. 3 bolts and Speedplay options
WEIGHT	175 gr. (Size 43)
INSOLE	EVA
UPPER	1,2 mm Microfiber, supported with memory foam
CLOSURE SYSTEM	Dual side mounted BOA® Fit System Li2 micro-adjustable premium (aluminium) dial

GLIDE

nimbl

GLIDE

MODEL	ULTIMATE GLIDE
CLEATS SYSTEM	Three bolt and Speedplay
SOLE GUARD	Less than 2 mm sole stack
SIZE RANGE	37 > 47 and half size
OUTSOLE	New Nimbl® monocoque carbon chassis. 3 bolts and Speedplay options
WEIGHT	172 gr. (Size 43)
INSOLE	EVA
UPPER	1,2 mm Microfiber, supported with memory foam
CLOSURE SYSTEM	Dual side mounted BOA® Fit System Li2 micro-adjustable premium (aluminium) dial

nimbl

GLIDE

MODEL	ULTIMATE GLIDE
CLEATS SYSTEM	Three bolt and Speedplay
SOLE GUARD	Less than 2 mm sole stack
SIZE RANGE	37 > 47 and half size
OUTSOLE	New Nimbl® monocoque carbon chassis. 3 bolts and Speedplay options
WEIGHT	172 gr. (Size 43)
INSOLE	EVA
UPPER	1,2 mm Microfiber, supported with memory foam
CLOSURE SYSTEM	Dual side mounted BOA® Fit System Li2 micro-adjustable premium (aluminium) dial

nimbl

GLIDE

MODEL	ULTIMATE GLIDE
CLEATS SYSTEM	Three bolt and Speedplay
SOLE GUARD	Less than 2 mm sole stack
SIZE RANGE	37 > 47 and half size
OUTSOLE	New Nimbl® monocoque carbon chassis. 3 bolts and Speedplay options
WEIGHT	172 gr. (Size 43)
INSOLE	EVA
UPPER	1,2 mm Microfiber, supported with memory foam
CLOSURE SYSTEM	Dual side mounted BOA® Fit System Li2 micro-adjustable premium (aluminium) dial

nimbl

GLIDE

MODEL	ULTIMATE GLIDE
CLEATS SYSTEM	Three bolt and Speedplay
SOLE GUARD	Less than 2 mm sole stack
SIZE RANGE	37 > 47 and half size
OUTSOLE	New Nimbl® monocoque carbon chassis. 3 bolts and Speedplay options
WEIGHT	172 gr. (Size 43)
INSOLE	EVA
UPPER	1,2 mm Microfiber, supported with memory foam
CLOSURE SYSTEM	Dual side mounted BOA® Fit System Li2 micro-adjustable premium (aluminium) dial

nimbl

GLIDE PRO EDITION

MODEL	ULTIMATE GLIDE PRO EDITION
CLEATS SYSTEM	Three bolt and Speedplay
SOLE GUARD	Less than 2 mm sole stack
SIZE RANGE	37 > 47 and half size
OUTSOLE	New Nimbl® monocoque carbon chassis. 3 bolts and Speedplay options
WEIGHT	172 gr. (Size 43)
INSOLE	EVA
UPPER	1,2 mm Microfiber, supported with memory foam
CLOSURE SYSTEM	Dual side mounted BOA® Fit System Li2 micro-adjustable premium (aluminium) dial

nimbl

SHOES XXVI

nimbl

MODEL	ULTIMATE AIR
CLEATS SYSTEM	Three bolt and Speedplay
SOLE GUARD	Less than 2 mm sole stack
SIZE RANGE	37 > 47 and half size
OUTSOLE	New Nimbl® monocoque carbon chassis. 3 bolts and Speedplay options
WEIGHT	160 gr. (Size 43)
INSOLE	EVA
UPPER	1,2 mm Microfiber, supported with memory foam
CLOSURE SYSTEM	Dual side mounted BOA® Fit System Li2 micro-adjustable premium (aluminium) dial

nimbl

ULTIMATE AIR PRO EDITION

MODEL	ULTIMATE AIR PRO EDITION
CLEATS SYSTEM	Three bolt and Speedplay
SOLE GUARD	Less than 2 mm sole stack
SIZE RANGE	37 > 47 and half size
OUTSOLE	New Nimbl® monocoque carbon chassis. 3 bolts and Speedplay options
WEIGHT	160 gr. (Size 43)
INSOLE	EVA
UPPER	1,2 mm Microfiber, supported with memory foam
CLOSURE SYSTEM	Dual side mounted BOA® Fit System Li2 micro-adjustable premium (aluminium) dial

nimbl

TUNAP SPORTS

DIE RICHTIGE PFLEGE FÜR JEDES BIKE.

Von Profis entwickelt.
Für alle gemacht.

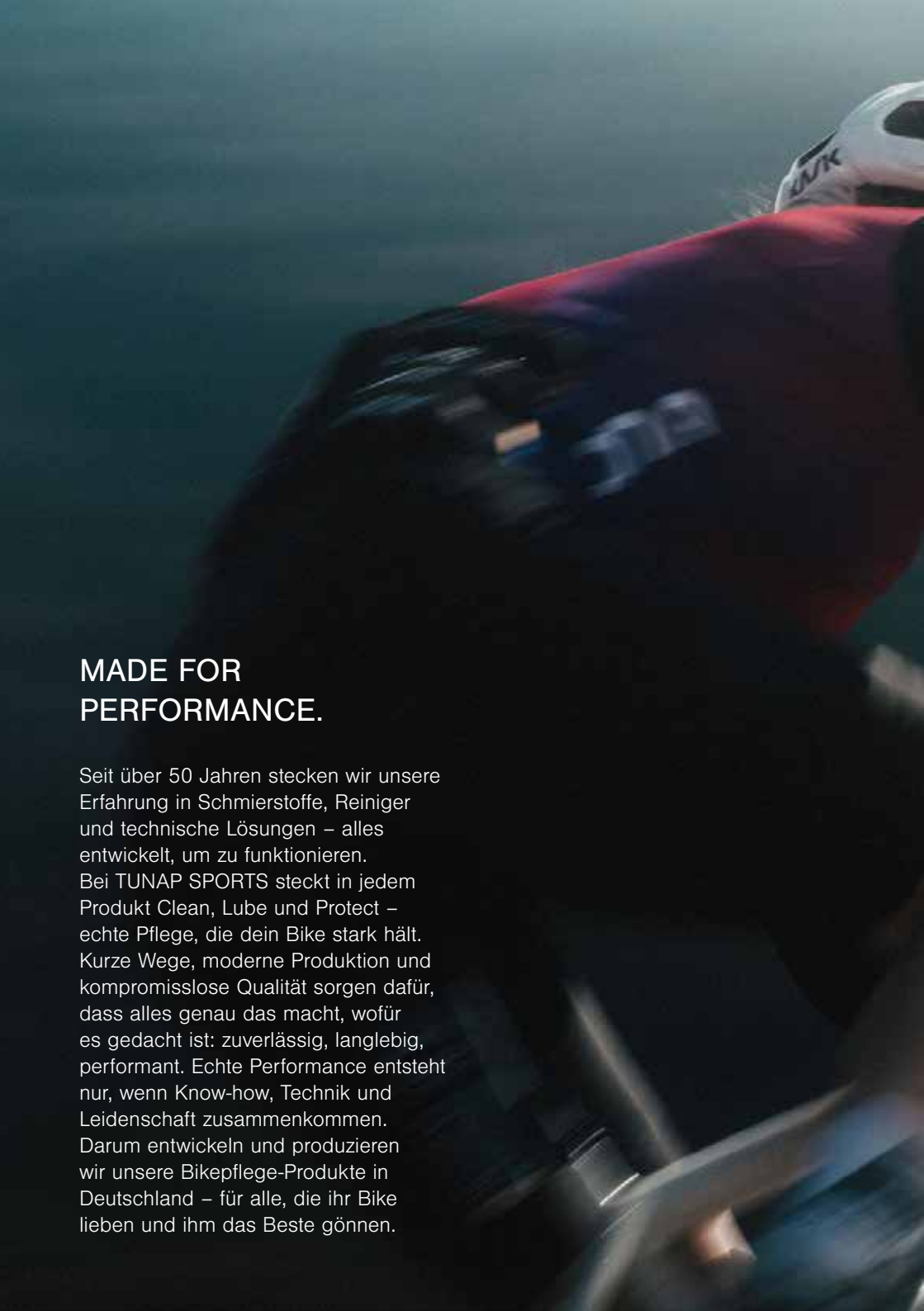

MADE FOR PERFORMANCE.

Seit über 50 Jahren stecken wir unsere Erfahrung in Schmierstoffe, Reiniger und technische Lösungen – alles entwickelt, um zu funktionieren.
Bei TUNAP SPORTS steckt in jedem Produkt Clean, Lube und Protect – echte Pflege, die dein Bike stark hält.
Kurze Wege, moderne Produktion und kompromisslose Qualität sorgen dafür, dass alles genau das macht, wofür es gedacht ist: zuverlässig, langlebig, performant. Echte Performance entsteht nur, wenn Know-how, Technik und Leidenschaft zusammenkommen.
Darum entwickeln und produzieren wir unsere Bikepflege-Produkte in Deutschland – für alle, die ihr Bike lieben und ihm das Beste gönnen.

MADE IN
GERMANY
Deutschland
Wolfratshausen
Seit über
50 Jahren

TECHNISCH PRÄZISE. ECHT DURCHDACHT.

Unsere Produkte entstehen nicht irgendwo – sie werden in Deutschland entwickelt, getestet und produziert. Im Labor prüfen unsere Entwickler jeden Reiniger, jedes Öl und jedes Spray bis ins kleinste Detail, damit Clean, Lube und Protect perfekt funktionieren. Wir verbinden Erfahrung, modernste Technik und echte Leidenschaft für Bikes – für Produkte, die halten, was sie versprechen.
So stellen wir sicher: Dein Bike läuft leichter, hält länger und sieht besser aus. Ganz einfach, zuverlässig, TUNAP SPORTS.

Romano Klawa
Produktentwickler

01 CLEAN

02 LUBE

03 PROTECT

Mit unseren Reinigern wird aus schmutzig wieder glänzend – schnell, effizient und materialschonend. Ob für Kette, Rahmen oder das ganze Bike: Wir haben die passende Lösung, abgestimmt auf jedes Detail.

Unsere Schmierstoffe sorgen für geschmeidige Schaltvorgänge, leisen Lauf und eine lange Lebensdauer deiner Antriebskomponenten.

Nach dem Reinigen und Schmieren kommt der Schutz. Unsere Protect-Produkte halten Salz, Feuchtigkeit und Schmutz in Schach und machen Komponenten langlebiger.

QUICK GUIDE

01 FAHRRAD VORREINIGEN

Fahrrad mit Wasser abspülen und grobe Verschmutzungen entfernen.

02 FAHRRADREINIGER AUFSPRÜHEN

Fahrradreiniger auf Rahmen und Reifen aufsprühen. 4-6 Minuten einwirken lassen. Besonders schmutzige Stellen ggf. mit Fahrradbürste reinigen. In der Einwirkzeit Reiniger gründlich mit Wasser abspülen.

03 KETTE UND ANTRIEB REINIGEN

Kette, Kassette, Kettenblätter und Schaltwerkröllchen mit Antriebsreiniger und ggf. Kettenbürste vom alten Öl und Dreck befreien. Bei Sand und grobem Schmutz in der Kette diese mit Wasser spülen. Kette danach mit einem Tuch abziehen.

04 BREMSE REINIGEN

Zu reinigenden Teile (Bremsscheiben, Bremskörper) mit dem Bremsenreiniger einsprühen. Den Reiniger kurz einwirken lassen. Warten bis das Lösungsmittel verdampft ist (5-10 Sekunden). Danach mit einem Tuch den gelösten Schmutz abwischen und alle Teile trocken reiben.

05 KETTE SCHMIEREN

Die Tropfflasche leicht drücken und das Öl auf die Kette auftragen, dabei die Kurbel drehen, bis die ganze Kette mit ausreichend Kettenöl benetzt ist. Das Kettenöl 10-15 Minuten (oder über Nacht) einwirken lassen. Vor der nächsten Tour die Kette mit einem Tuch abreiben und das überschüssige Öl entfernen.

ENTWEDER

05 KETTE WACHSEN

Die Flasche leicht drücken und durch rückwärtsdrehen der Kurbel jedes Kettenglied mit einem Tropfen benetzen, bis die Kette einmal komplett durchgelaufen ist. Das Kettenwachs ca. 1 Std. einziehen lassen - oder über Nacht. Die Kette mit einem Tuch leicht abwischen.

ODER

06 RAHMEN SCHÜTZEN

Zum Abschluss dein Bike mit dem Rahmen-Finish pflegen: aufsprühen, verteilen, kurz einziehen lassen – fertig. Danach das Oberflächenschutz-Spray auftragen. Wasser und Schmutz perlen ab, dein Bike bleibt länger sauber, geschützt und ready to ride.

CLEAN
CLEAN
CLEAN

FAHRRADREINIGER

- Perfekte Handhabung
- Nachhaltig & stark
- Löst hartnäckigen Schmutz
- E-Bike-ready

01 CLEAN

SCHLUSS MIT SCHMUTZ!

Schmutz hat keine Chance: Clean bringt dein Bike auf Hochglanz – vom Antriebs- bis zum Fahrradreiniger. Die Basis für jede Pflege. Sauber, schnell, perfekt.

Gefahr
Extrem entzündbares Aerosol. Behälter steht unter Druck: Kann bei Erwärmung bersten. Verursacht Hautreizungen. Verursacht schwere Augenreizung. Kann Schläfrigkeit und Benommenheit verursachen. Schädlich für Wasserorganismen, mit langfristiger Wirkung. Die Informationen auf dem Produktetikett sind stets zu befolgen.

Gefahr
Extrem entzündbares Aerosol. Behälter steht unter Druck: Kann bei Erwärmung bersten. Kann Schläfrigkeit und Benommenheit verursachen. Schädlich für Wasserorganismen, mit langfristiger Wirkung. Die Informationen auf dem Produktetikett sind stets zu befolgen.

Fahrradreiniger 750 ml

UVP 16,9

Dein Bike soll strahlen, ohne dass du lange schrubbst. TUNAP SPORTS Fahrradreiniger löst hartnäckigen Dreck, schützt Rahmen & Technik und sorgt für schnellen Glanz – einfach aufsprühen, abspülen, fertig.

- Schluss mit Schmutz
- Einfache Anwendung
- Schützt dein Bike
- Saubere Leistung

Antriebsreiniger 300 ml

UVP 14,9

Dein Antrieb braucht Pflege, aber kein Drama. Einfach aufsprühen, einwirken lassen, fertig. Der TUNAP SPORTS Antriebsreiniger entfernt Schmutz & Öl schnell, Hände bleiben sauber, Kette sofort wieder geschmiert. Mehr Zeit fürs Fahren, weniger für Putzen.

- Gründliche Kettenreinigung
- Saubere Sache
- Kein Nachspülen nötig
- Schont dein Bike

n-hexane free

Bremsenreiniger 300 ml

UVP 9,9

Bremsen quietschen oder sind verschmutzt? Der TUNAP SPORTS Bremsenreiniger beseitigt Schmutz, Öl und Bremsstaub zuverlässig. Einfach punktgenau aufsprühen, Bremskraft wieder spürbar – sauber, schnell und sicher.

- Für sicheres Bremsen
- Sanft zur Technik & hart zum Dreck
- Einfach aufsprühen
- Schnell einsatzbereit

PROFI-TIPP

Nach Fahrten im Regen und bei Nässe oder nach dem Waschen das Fahrrad trocken reiben – das verlängert die Lebensdauer deutlich.

SCHWALBE

E-BIKE READY

DIE BEDEUTUNG DAHINTER!

E-Bike Ready heißt: Entwickelt für moderne Antriebe. Unsere Produkte sind nicht elektrisch leitend, unterbinden Feuchtebrücken und schützen elektronische Schaltungen zuverlässig. Gleichzeitig halten sie dank spezieller Additivierung hohen Drehmomenten beim Anfahren stand – genau das, was E-Bikes täglich fordern. Für sichere Funktion, sauberen Lauf und maximale Lebensdauer von Antrieb und Elektronik.

Gefahr
Extrem entzündbares Aerosol. Behälter steht unter Druck: Kann bei Erwärmung bersten.
Die Informationen auf dem Produktetikett sind stets zu befolgen.

Gefahr
Extrem entzündbares Aerosol. Behälter steht unter Druck: Kann bei Erwärmung bersten.
Die Informationen auf dem Produktetikett sind stets zu befolgen.

Federgabelreiniger 125 ml

Deine Federgabel oder Dämpfer haken? Einfach TUNAP SPORTS Federgabelreiniger aufsprühen, Schmutz entfernen, Dichtungen pflegen. Spürbar bessere Kontrolle und reibungsloses Fahrverhalten auf jedem Trail.

- Mehr Fahrspaß, weniger Widerstand
- Reinigt & schützt
- Sanft zur Technik
- Schnelle Pflege

Textildeo 300 ml

Schluss mit muffigen Schuhen, Handschuhen oder Helmen: TUNAP SPORTS Textildeo neutralisiert Gerüche, hinterlässt Frische und schützt Materialien – schnell, sauber, zuverlässig.

- Nie wieder müffelnde Ausrüstung
- Trocknet blitzschnell & rückstandslos
- Schnell & einfach
- Wirkt antibakteriell

Duschschaum 200 ml

Schweiß ab, Frische an! Der TUNAP SPORTS Duschschaum verwandelt sich in cremigen Schaum, reinigt sanft, pflegt Haut und Muskeln. Für aktive Menschen, die sich nach jedem Training schnell erfrischen wollen.

- Schweiß runter, Frische rein
- Angenehmes Gefühl
- Super ergiebig
- 100 % vegan

MAXXIS
KAVENZ
MAXXIS

PROFI-TIPP

Nehmt einen Montageständer zum Fahrradwaschen. So kommt ihr überall besser dran und das Fahrrad kann nicht umfallen. Das macht euch das Leben leichter.

LUBE
LUBE
LUBE

KETTENÖL ULTIMATE

- Hält über 600 km
- weniger Verschleiß
- Spürbar leiser Lauf
- Einfache Anwendung

02 LUBE

UNSERE KETTENÖLE

Performance, die bleibt. TUNAP SPORTS Kettenöle reduzieren Reibung, schützen vor Verschleiß und sorgen für einen leisen, effizienten Antrieb. Die abgestimmte Formulierung dringt tief ein, hält zuverlässig auf der Kette und funktioniert bei hoher Belastung ebenso wie im Alltag. Für sauberes Schalten, lange Laufleistung und spürbar mehr Effizienz auf jeder Fahrt.

Gefahr
Extrem entzündbares Aerosol. Behälter steht unter Druck: Kann bei Erwärmung bersten. Kann allergische Hautreaktionen verursachen. Die Informationen auf dem Produktetikett sind stets zu befolgen.

Kettenöl Ultimate 100 ml

Die Kette flüstert: TUNAP SPORTS Kettenöl Ultimate sorgt für leichtlaufende Kette, Schutz vor Verschleiß, präzise aufgetragen – mehr Fahrspaß, weniger Wartung.

- Mehr Reichweite, weniger Verschleiß
- Bleibt da, wo es hingehört
- Einfache Anwendung
- Spürbar leiser Lauf

Kettenöl Ultimate im Mini-Tropfer 50 ml

Unser Testsieger in der praktischen 50-ml-Größe für unterwegs oder zum Ausprobieren.

- Mehr Reichweite, weniger Verschleiß
- Bleibt da, wo es hingehört
- Einfache Anwendung
- Spürbar leiser Lauf

Kettenöl Ultimate 125 ml

BESTSELLER

Sprüh drauf, Kette läuft wie neu. TUNAP SPORTS Kettenöl Ultimate Spray kriecht schnell in die Kettenglieder und hinterlässt einen dünnen Film, reduziert Reibung, schützt vor Verschleiß – für alle, die Performance lieben.

- Schnelle, saubere Anwendung
- Langanhaltende Performance
- OMC_2 Additivtechnologie
- Maximale Vielseitigkeit

PROFI-TIPP

Weniger ist mehr: Zu viel Schmierstoff zieht Schmutz an und erhöht den Verschleiß. Vor der Tour die Ketten mit einem Tuch abziehen, um überschüssigen Schmierstoff zu entfernen.

02 LUBE

UNSERE KETTENWACHSE

Sauber fahren. Effizient bleiben. Kettenwachs steht für minimalen Schmutzantrag und maximale Sauberkeit. Die trockene Wachsschicht bindet kaum Staub, sorgt für leisen Lauf und hohe Effizienz. Gleichzeitig hält sie dank spezieller Additive auch hohen Drehmomenten bei E-Bikes stand. Ideal für alle, die wenig Pflegeaufwand und konstanten Leichtlauf wollen.

Gefahr
Kann bei Verschlucken und Eindringen in die Atemwege tödlich sein.
Die Informationen auf dem Produktetikett sind stets zu befolgen.

Gefahr
Kann bei Verschlucken und Eindringen in die Atemwege tödlich sein.
Die Informationen auf dem Produktetikett sind stets zu befolgen.

Gefahr
Extrem entzündbares Aerosol. Behälter steht unter Druck: Kann bei Erwärmung bersten. Verursacht Hautreizungen. Kann Schläfrigkeit und Benommenheit verursachen. Schädlich für Wasserorganismen, mit langfristiger Wirkung. Die Informationen auf dem Produktetikett sind stets zu befolgen.

Kettenwachs Ultimate 100 ml

Einfach, sauber, effizient: TUNAP SPORTS Kettenwachs Ultimate tropfen – Kette leicht, geschützt und sauber. Ideal für zu Hause oder unterwegs.

- Langlebige Schmierung, minimale Arbeit
- Präzises Auftragen, kein Schmutz
- Mehr Speed, weniger Reibung
- Langanhaltender Schutz

Kettenwachs Ultimate im Mini-Tropfer 30 ml

Das Kettenwachs Ultimate in der praktischen 30-ml-Größe zum ausprobieren oder auch für unterwegs. Wachse deine Kette im Handumdrehen egal wo du gerade bist – für maximale Performance ohne Wachsbad.

- Für bis zu 8 Anwendungen
- Weniger Dreck, mehr Performance
- Schutz gegen Rost & Nässe
- Ultra-leise Kette

Kettenwachs Ultimate 125 ml

Wachse deine Kette im Handumdrehen: Aufsprühen, einwirken lassen, fertig. Sauber, leicht laufend, schützt vor Schmutz & Rost – für maximale Performance ohne Wachsbad.

- Easy auftragen, lange fahren
- Weniger Dreck, mehr Performance
- Schutz gegen Rost & Nässe
- Ultra-leise Kette

FAHRRAD
E-Bike Ready
KETTEN
WACHS
Ultimate

PROFI-TIPP

Wenn's mal schnell gehen muss: Unsere LUBE-Produkte gibt's auch als praktische Sprüh-Anwendung – einfach, sauber und effizient!

KETTENÖLE VS. KETTENWACHSE

Zwei Lösungen. Ein Ziel!
Ein besserer Antrieb.

Kettenöl Ultimate

- Dringt tief in die Kettenglieder ein
- Sehr guter Schutz bei Nässe und hoher Belastung
- Langanhaltende Schmierung – auch bei hohen Drehmomenten
- Ideal für Vielfahrer, E-Bikes und anspruchsvolle Bedingungen

Der bewährte Allrounder für alle Bedingungen.

Kettenwachs Ultimate

- Trockene, schmutzabweisende Oberfläche
- Kaum Anhaftung von Staub und Dreck
- Ruhiger, sauberer Lauf auf trockenen Strecken
- Ideal für Rennrad, Gravel und Schönwetterfahrten

Sauber, effizient, fast wartungsfrei.

	Kettenöl Ultimate	Kettenwachs Ultimate	Kettenöl Wet & Winter	Kettenöl ECO
Haltbarkeit	+++	+++	+++	++
Schmutz-abweisung	++	+++	++	+
Schutz	Sehr gut bei Nässe & Belastung	Sehr gut verhindert Anhaften von Schmutz	Optimal bei Nässe, Salz & Matsch	Umweltfreundlich, trotzdem Schutz
Anwendung	Tropfflasche	Tropfflasche	Tropfflasche	Tropfflasche
E-Bike Einsatz	✔	✔	✔	✔
Wetter				
Performance	Testsieger, langlebige Schmierung	Ruhiger, sauberer Lauf	Ideal für extreme Bedingungen	Nachhaltig, zuverlässig

- neutral / + gut / ++ sehr gut / +++ Top Performance

SAUBER. GESCHMIERT.
READY TO RIDE.

+20%
Lebensdauer der Kette
+25%
Schutz bei Nässe & Salz
-40%
Schmutzanhaftung
Zahlen, die nicht nur dich überzeugen – dein Bike wird sie lieben.

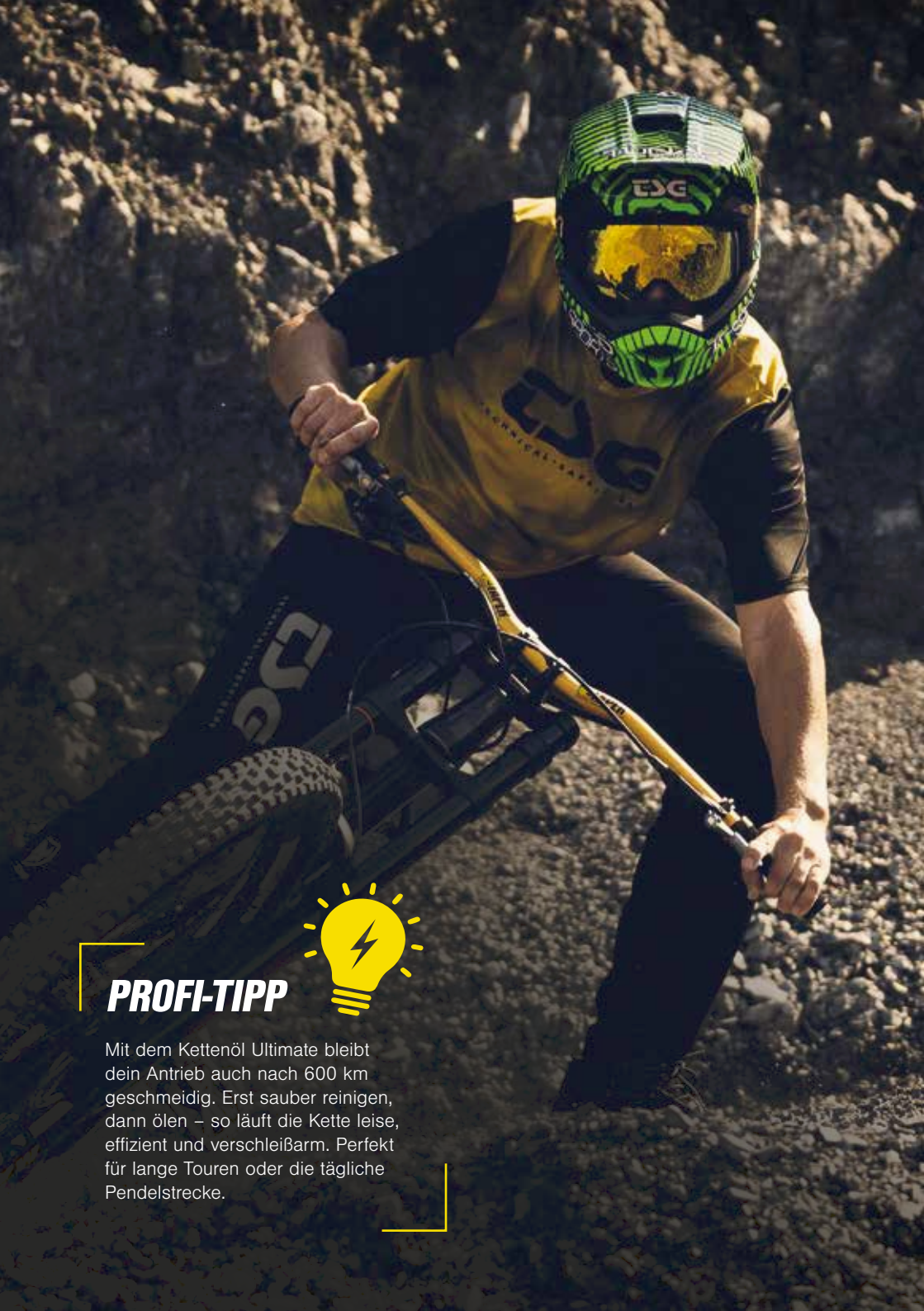

PROFI-TIPP

Mit dem Kettenöl Ultimate bleibt dein Antrieb auch nach 600 km geschmeidig. Erst sauber reinigen, dann ölen – so läuft die Kette leise, effizient und verschleißarm. Perfekt für lange Touren oder die tägliche Pendelstrecke.

HAMBURG
PRAG
LUXEMBURG
START
WOLFRATSHAUSEN
GARDASEE

02 LUBE

WEITERE LUBE-PRODUKTE

Für jeden Einsatz das richtige System: Ob Kettenöl Eco, Wet & Winter, Lagerfett oder Spezialschmierstoffe: Unsere Lube-Produkte sind auf unterschiedliche Bedingungen und Anforderungen abgestimmt. Vom nachhaltigen Alltagseinsatz bis zur maximalen Belastung bei Nässe, Kälte oder Dauerbeanspruchung. Immer mit dem Ziel: Reibung reduzieren, Verschleiß minimieren, Performance sichern.

Gefahr
Extrem entzündbares Aerosol. Behälter steht unter Druck: Kann bei Erwärmung bersten. Verursacht Hautreizungen. Verursacht schwere Augenreizung. Kann Schläfrigkeit und Benommenheit verursachen. Schädlich für Wasserorganismen, mit langfristiger Wirkung. Die Informationen auf dem Produktetikett sind stets zu befolgen.

Kettenöl Eco 100 ml

Umweltfreundlich und trotzdem leistungsstark: Das TUNAP SPORTS Kettenöl ECO schützt Kette & Natur. Selbst bei Minusgraden flüssig, langlebig, sauber aufzutragen – für alle Bikes, die du liebst.

- Schmiert top, schützt die Umwelt
- Rost & Reibung? Keine Chance!
- Nachhaltig verpackt
- Langanhaltende Performance

Kettenöl Wet & Winter 125 ml

Winter, Schnee, Streusalz? Kein Problem. TUNAP SPORTS Kettenöl Wet & Winter hält die Kette flüssig, schützt vor Rost und sorgt für geschmeidigen Lauf – auch bei Minusgraden.

- Perfekt für Winterfahrten
- Starker Schutz gegen Salz & Nässe
- Bleibt, wo es soll
- Saubere Anwendung

Lagerfett 100 g

Reibung reduzieren, Lager schützen:
TUNAP SPORTS Lagerfett sorgt für leicht laufende Lager, schützt vor Feuchtigkeit und Verschleiß – mehr Kontrolle, weniger Ärger.

- Dein Bike verdient das Beste
- Schmutz bleibt draußen
- Einfach aufzutragen
- Hält extrem lange

PROTECT
PROTECT
PROTECT

REIFENDICHTMILCH

- Schutz für jedes Abenteuer
- Einfach & schnell
- Pannenschutz
- Ammoniakfrei & CO_2-kompatibel

03 PROTECT

PFLEGE DIE BLEIBT!

Schutz, auf den du dich verlassen kannst: Unsere Protect Produkte bewahren dein Bike vor Verschleiß, Rost und Pannen – von Korrosionsschutz bis Pannenspray. Mehr Sicherheit, längere Lebensdauer, mehr Spaß auf jeder Tour.

Gefahr
Extrem entzündbares Aerosol. Behälter steht unter Druck: Kann bei Erwärmung bersten.
Die Informationen auf dem Produktetikett sind stets zu befolgen.

Reifendichtmilch 250 ml

Pannen adé! TUNAP SPORTS Reifendichtmilch verschließt Löcher bis 8 mm zuverlässig. Einfach ins Ventil, schützt Reifen & Felge, CO_2-kompatibel und für alle Bikes einsatzbereit – entspannt fahren, egal wo.

- Schutz für jedes Abenteuer
- Einfach & schnell
- Hält lange durch
- Schonend für Reifen & Umwelt

Reifendichtmilch 1.000 ml

Die 1-Liter-Version der TUNAP SPORTS Reifendichtmilch ist perfekt für alle, die mehrere Bikes fahren oder regelmäßig nachfüllen. Die bewährte Formel verschließt Löcher bis 8 mm zuverlässig, schützt Reifen und Felge und sorgt für maximale Pannensicherheit auf jeder Strecke.

- Perfekt zum Nachfüllen
- Für mehrere Bikes geeignet
- Zuverlässiger Schutz bis 8 mm
- Langanhaltende Wirkung

Pannenspray 125 ml

Platt auf der Tour? Kein Problem! Einfach aufs Ventil, sprühen, fertig – das TUNAP SPORTS Pannenspray dichtet Löcher bis 5 mm ab und pumpt den Reifen auf. So bleibst du schnell unterwegs und musst dein Bike nicht ausbauen. Für mehr Fahrspaß ohne Stress.

- Pannenschutz in Sekunden
- Ohne Werkzeug & ohne Stress
- Für jedes Bike
- Immer dabei

PROFI-TIPP

Den Reifen für das Tubeless-Setup erst auf die Felge ziehen und aufpumpen. Danach die Dichtmilch über das Ventil einfüllen, um sauber und ohne zu kleckern zu arbeiten.

MAXXIS
ringlé
TUNAP
SPORTS
BIKE
E-Bike Ready
REIFENDICHT-
MILCH
TUBELESS
SEALANT

03 PROTECT

PFLEGEPRODUKTE

Unsere Pflegeprodukte schützen aktiv und erhalten den Wert deines Bikes. Die Rahmenpflege frischt Lack, Carbon und Metall auf, wirkt schmutzabweisend und sorgt dafür, dass dein Fahrrad länger wie neu aussieht.

Gefahr
Extrem entzündbares Aerosol. Behälter steht unter Druck: Kann bei Erwärmung bersten. Die Informationen auf dem Produktetikett sind stets zu befolgen.

Gefahr
Extrem entzündbares Aerosol. Behälter steht unter Druck: Kann bei Erwärmung bersten. Kann Schläfrigkeit und Benommenheit verursachen. Schädlich für Wasserorganismen, mit langfristiger Wirkung Die Informationen auf dem Produktetikett sind stets zu befolgen.

Gefahr
Extrem entzündbares Aerosol. Behälter steht unter Druck: Kann bei Erwärmung bersten. Verursacht Hautreizungen. Kann Schläfrigkeit und Benommenheit verursachen. Giftig für Wasserorganismen, mit langfristiger Wirkung. Die Informationen auf dem Produkt-etikett sind stets zu befolgen.

Rahmen-Finish 300 ml

Dein Bike glänzt und bleibt sauber: TUNAP SPORTS Rahmen-Finish versiegelt, schützt und bringt neue Intensität ins Schwarz – einfach aufsprühen, abwischen, fertig.

- Wasser & Schmutz perlen ab
- Glanz & Schutz für dein Bike
- Für jeden Rahmen geeignet
- UV-Schutz inklusive

Oberflächenschutz-Spray 300 ml

Das Oberflächenschutz-Spray versiegelt Rahmen und Komponenten mit einer unsichtbaren Schutzschicht. Schmutz haftet weniger, Wasser perlt ab und dein Bike bleibt länger sauber. Perfekt als letzter Schritt nach der Reinigung – für mehr Werterhalt und weniger Aufwand.

- Lotus-Effekt gegen Wasser und Schmutz
- Weniger Schmutzanhaftung, schnellere Reinigung
- Für Lack, Carbon, Kunststoff und Metall
- Ideal nach der Wäsche oder vor der Tour

Imprägnierspray 300 ml

Das TUNAP SPORTS Imprägnierspray macht Textilien und Oberflächen wasser- und schmutzabweisend, ohne die Atmungsaktivität zu beeinträchtigen. Ideal für Schuhe, Taschen, Bekleidung und empfindliche Materialien. Schützt zuverlässig vor Nässe – bei jedem Wetter, auf jeder Tour.

- Bleib trocken, egal bei welchem Wetter
- Unsichtbar, aber effektiv
- Atmungsaktiv & langanhaltend
- Frei von PFAS

PROFI-TIPP

Im Winter oder bei Nässe gezielt auf Wet- & Winter-Produkte setzen – für den Extra-Boost an Rostschutz.

03 PROTECT

DETAILS, DIE ENTSCHEIDEN!

Gefahr
Extrem entzündbares Aerosol. Behälter steht unter Druck: Kann bei Erwärmung bersten. Kann Schläfrigkeit und Benommenheit verursachen. Schädlich für Wasserorganismen, mit langfristiger Wirkung. Die
Informationen auf dem Produktetikett sind stets zu befolgen.

Carbon Montagepaste 50 g

Sorgt für sicheren Halt bei weniger Klemmkraft. Die feinen Partikel erhöhen die Reibung zwischen Carbon- und Metallflächen und verhindern das Verdrehen von Sattelstützen, Lenkern und Vorbauten. Schützt empfindliche Carbonteile und beugt Materialschäden vor.

- Perfekter Halt für Carbon-Parts
- Schützt dein Material
- Easy aufzutragen
- Maximale Sicherheit

Multifunktionsöl 125 ml

Ein echtes Allround-Tool: Löst festsitzende Teile, verdrängt Feuchtigkeit, schützt vor Korrosion und hält bewegliche Komponenten geschmeidig. Für Werkstatt, Garage und schnelle Hilfe unterwegs.

- Das Multitalent fürs Bike
- Schnell & effektiv
- Sanft zur Technik
- Schützt nachhaltig

Sitzcreme 250 ml

Komfortabel sitzen, egal wie lang die Tour: TUNAP SPORTS Sitzcreme schützt Sattelmaterial, reduziert Reibung und macht jede Fahrt angenehmer – schnell aufgetragen, lang anhaltend

- Reduziert Reibung
- Pflegt & schützt die Haut
- Langanhaltende Gleitwirkung
- Angenehm frischer Duft

PROFI-TIPP

Carbonteile niemals trocken montieren - immer Montagepaste verwenden, für sicheren Halt.

TOOLS

ENTDECKE UNSERE TOOLS

Eine gründliche Fahrradpflege beginnt mit den richtigen Tools. Unsere Reinigungswerkzeuge sind darauf ausgelegt, jede Art von Verschmutzung – von Staub bis hartnäckigen Ölrückständen – effizient zu entfernen, ohne Materialien zu belasten. Präzise Bürstenformen, funktionale Details und robuste Materialien ermöglichen eine Reinigung bis in schwer zugängliche Bereiche wie Ritzel, Speichen oder Zwischenräume am Antrieb.

Mikrofasertuch 40x40 cm

UVP 7,5

TUNAP SPORTS Mikrofasertuch – sanft zu Rahmen, stark gegen Schmutz. Polieren, abwischen, glänzen lassen. Perfekt für schnelle Reinigung zwischendurch.

- Fusselfrei & ohne Kratzer
- Waschbar & wiederverwendbar
- Schützt den Lack
- Ideal zum Nachwischen & Polieren

Fahrradbürste

Schlamm, Staub oder Dreck – mit der TUNAP SPORTS Fahrradbürste kommt dein Bike wieder sauber auf die Strecke. Ergonomisch, langlebig und schonend für Rahmen und Lack – perfekt für die schnelle Reinigung nach jeder Tour.

- Reinigt Rahmen & Komponenten
- Weiche Borsten
- Ergonomischer & rutschfester Griff
- Strapazierfähig & pflegeleicht

Zwischenraumbürste

Selbst in engen Spalten sitzt kein Schmutz mehr. TUNAP SPORTS Zwischenraumbürste erreicht Ritzel, Kassette und enge Stellen zuverlässig. Für saubere Ketten und Antriebe – schnell, gründlich, ganz ohne Ärger.

- Kommt tief in enge Zwischenräume
- Materialschonend & widerstandsfähig
- Für präzise Detailreinigung
- Flexibles Design

Ketten/Riemenbürste

Kette oder Riemen reinigen? TUNAP SPORTS Ketten-/Riemenbürste sorgt für sauberen Lauf, schützt Material und erleichtert die Schmierung. Schnell, sauber, zuverlässig – für maximale Performance deines Bikes.

- Bauform für schwer erreichbare Stellen
- Materialschonend – ohne Kratzer
- Ideal für schnelle Zwischenreinigungen
- Robust, griffig & langlebig

DEINE FRAGEN, UNSERE ANTWORTEN!

02

WARUM SIND DIE TUNAP SPORTS PRODUKTE SO GUT?

Über 50 Jahre Erfahrung stecken in jedem Produkt. Ob Profi oder Alltagsradler – unsere Clean-, Lube- und Protect - Lösungen sind praxisnah getestet, zuverlässig und für maximale Performance entwickelt. Einfach: Produkte, die tun, was sie versprechen.

01

WARUM SOLLTE ICH MEIN FAHRRAD ÜBERHAUPT PFLEGEN?

Regelmäßige Pflege hält dein Bike zuverlässig in Schuss. Sie schützt vor Verschleiß, verlängert die Lebensdauer von Kette, Antrieb und Komponenten und sorgt dafür, dass dein Bike sicher läuft und jede Fahrt Spaß macht.

05

WO KANN ICH TUNAP SPORTS PRODUKTE KAUFEN?

- Entweder direkt in unserem Online-Shop oder im Fachhandel in deiner Nähe. So findest du immer die passende Lösung für dein Bike.

04

WARUM EIN SET STATT EINZELNER PRODUKTE?

- Ein Set kombiniert Clean, Lube und Protect - perfekt aufeinander abgestimmt. Du hast alles, was dein Bike für Pflege, Schmierung und Schutz braucht, direkt parat – sparst Zeit, Nerven und Geld.

03

WARUM SOLLTE ICH MEIN BIKE REGELMÄSSIG REINIGEN?

- Nur ein sauberes Rad läuft zuverlässig. Unsere Clean-Produkte entfernen schonend Schmutz, Salz und Ablagerungen, schützen die Materialien und sorgen dafür, dass Antrieb, Rahmen und Komponenten lange wie neu bleiben. So bleibt dein Bike leistungsfähig – Tour für Tour.

UNSERE CREW – LEIDENSCHAFT FÜRS RADFAHREN

Hinter TUNAP SPORTS stehen echte Bike-Liebhaber. Ob Profi, Athlet, Team oder passionierter Fahrer – sie alle teilen die Leidenschaft für saubere, geschmeidige Bikes und ungetrübten Fahrspaß. Sie wissen: Performance entsteht nicht im Rampenlicht, sondern auf dem Trail, der Straße und im täglichen Training.

GERMAN CYCLING E. V.

SEBI NEEF

MIKE KLUGE

PUSHBIKERS

BJÖRN KNÖLL

STEFFI MARTH

CARO SKARABELA

HANNES KLAUSNER

SABRINA MÜLLER

WIRKT EINFACH BESSER.

TUNAP GmbH & Co.KG
Bürgermeister-Seidl-Strasse 2
D-82515 Wolfratshausen

+49 8171 16 000
order@tunap-sports.de
tunap-sports.de

Haftungsausschluss: Die in diesem Katalog bereitgestellten Inhalte wurden mit größter Sorgfalt erstellt. Für die Richtigkeit, Vollständigkeit, Brauchbarkeit und Aktualität der Inhalte übernimmt die TUNAP GmbH & Co. KG („TUNAP") jedoch keine Gewähr. Der jeweilige Nutzer ist daher verpflichtet, sämtliche Inhalte vorab auf ihre Tauglichkeit für die von ihm geplante Verwendung fachmännisch zu prüfen oder prüfen zu lassen. Sämtliche im Katalog enthaltenen Produktinformationen werden dem Nutzer lediglich „wie vorhanden" und soweit gesetzlich zulässig, ohne jegliche (ausdrückliche der konkludente) Garantie, Zusage, Eigenschaftszusicherung oder Haftung zur Verfügung gestellt. Alle Angaben sind Richtwerte, die sich am Schmierstoffzusammenstellung, am vorgegebenen Einsatzzweck und an der Anwendungstechnik richten. Da die Produkte von TUNAP kontinuierlich weiterentwickelt werden, behält sich TUNAP das Recht vor, alle technischen Daten in diesem Katalog jederzeit und ohne Vorankündigung zu ändern. Für weitere Informationen stehen Ihnen technische Datenblätter, sowie Sicherheitsdatenblätter zu Verfügung. Außer im Falle vorsätzlicher Schädigung, haftet TUNAP nicht für Schäden, die durch oder in Folge der Benutzung dieser Informationen entstanden sind. In jedem Falle ist TUNAP jedoch nicht verantwortlich und übernimmt keinerlei Haftung für indirekte, mittelbare, zufällige oder Folgeschäden, die durch oder in Folge der Benutzung dieser Inhalte aufgetreten sind. Herausgeber

TUNAP GmbH & Co. KG
Stand: 03/2026

2026 TUNAP SPORTS Endkundenbroschüre / Artikelnummer 2000325

KASK

2027 CYCLING COLLECTION

INDEX

2027 Collection

KASK

About KASK 5
KASK Rotational Impact WG11 Test 6
Collection 10
Accessories 46
Sales Support 52

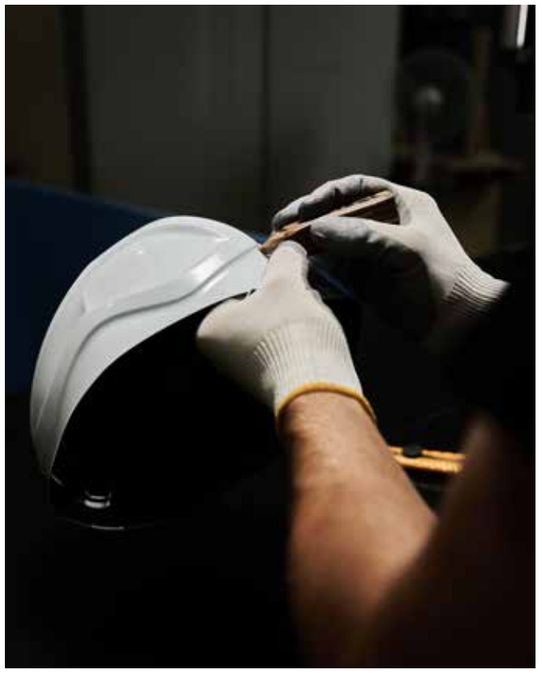

ABOUT

Your safety is in our nature

Since 2004, KASK has been developing and creating products that combine excellence and safety with innovative and unmistakable design. Constantly engaged in technological research to further improve the quality of its helmets and raise its production standards, KASK guarantees customers a wide range of products that meet the highest safety requirements.

In addition to the extraordinary quality of the materials used and their unmistakable style, KASK products are distinguished by perfect ergonomics and guarantee unparalleled comfort, even in the most extreme conditions.

Comfort, Safety, Design: following these principles, KASK has set the quality standards of the CSD Project. The design and features of all KASK collections are innovative, proprietary, and protected by numerous patents.

All KASK products are exclusively developed and manufactured in Italy to ensure the utmost quality and provide top-tier protective helmets for our discerning customers. We are dedicated to upholding the highest standards in helmet production, and maintaining full control over the entire production process is essential to delivering an excellent product.

SAFETY PROTOCOL

KASK ROTATIONAL IMPACT WG11 TEST

KASK has always been committed to creating products that provide both excellent safety and comfort, exceeding requirements set by international standards and norms.

KASK Rotational Impact WG11 Test is an internal protocol adopted by KASK to identify an objective method, based on scientific sources, for measuring the performance of its helmets against rotational impacts. Most helmets tests use rotational impact prevention technologies with headforms that have a higher coefficient of friction than those of the human skull and therefore may not reflect what occurs in some accidents.

The "pass-fail" criterion is based on the BrIC value, an algorithm that defines the level of brain injury. This value must be lower than 0,68.

The final test protocol is:

OBLIQUE IMPACT TESTs
oblique tests @ 45°, impact speed 6 m/s, BrIC < 0,68
+ grade 80 closed-coat aluminum oxide abrasive paper
+ headform nominal coefficient of friction 0,3
+ wireless system: triaxial accelerometer + n. 3 ARS
Headform: EN960 serie
Measurements:
Peak of rotational acceleration, Peak of linear acceleration, HIC, BRIC (< 0,68)

All KASK helmets successfully pass this test, with values that are substantially less than 0,68 BrIC 0,390.

*ROTATIONAL IMPACT WG11 TEST PASSED is a KASK registered trademark. The ROTATIONAL IMPACT TEST PASSED is a KASK internal oblique impact test that measures the performance of its helmets against rotational impacts. This Test has not been adopted by CEN or its Working Group CEN TC158/Working Group 11.

0.68

BrIC peak value (Brain Injury Criteria)
The BrIC value is an algorithm that defines the typical level of brain injury. This value must be lower than 0.68 – the lower, the better.

0.39

Our BrIC value is never above 0.39.

1
2
3
4
5

LAB TESTED.
ROAD APPROVED.

6 m/s

Rotational impact tested
Based on science and realistic impact scenarios, we test all our helmets for rotational impact reduction at a minimum speed of 6 m/s.

Discover more

Filippo Ganna

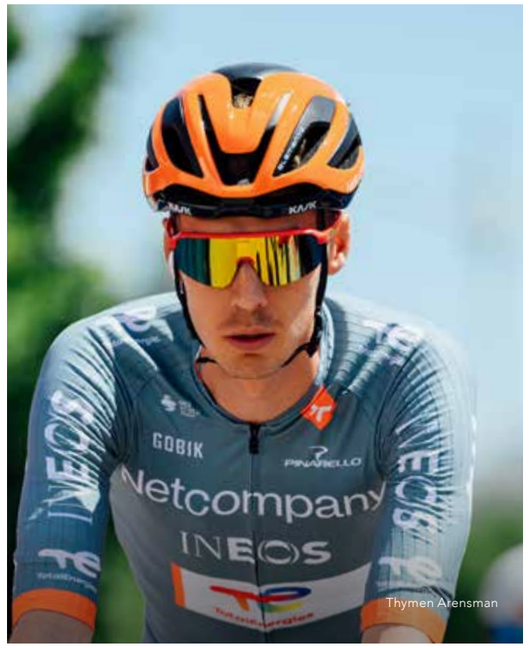

Thymen Arensman

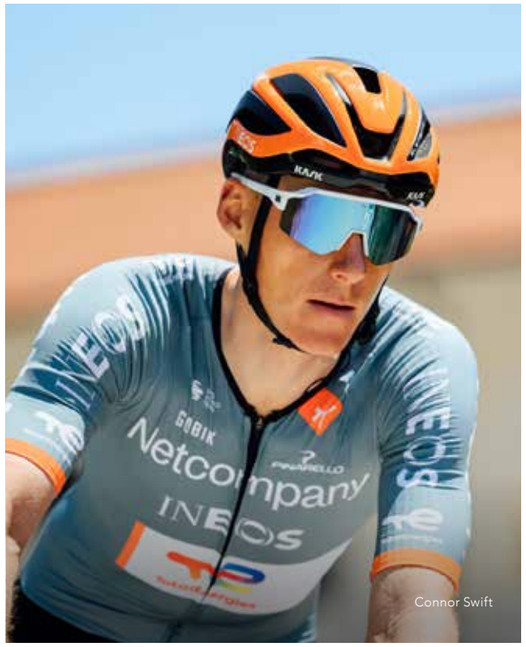

Connor Swift

Egan Bernal

ROAD

Netcompany INEOS Cycling Team

The Netcompany INEOS Cycling Team, formerly known as Team Sky and more recently INEOS Grenadiers, are the most successful Grand Tour cycling team in the world.
KASK has been a partner of the team since its inception in 2010. To date, the team has claimed seven editions of Tour de France, three Giro d'Italia, two Vuelta a España, and has achieved more than 550 race victories.

CYCLING

Collection

ROAD | GRAVEL | MTB CROSS-COUNTRY

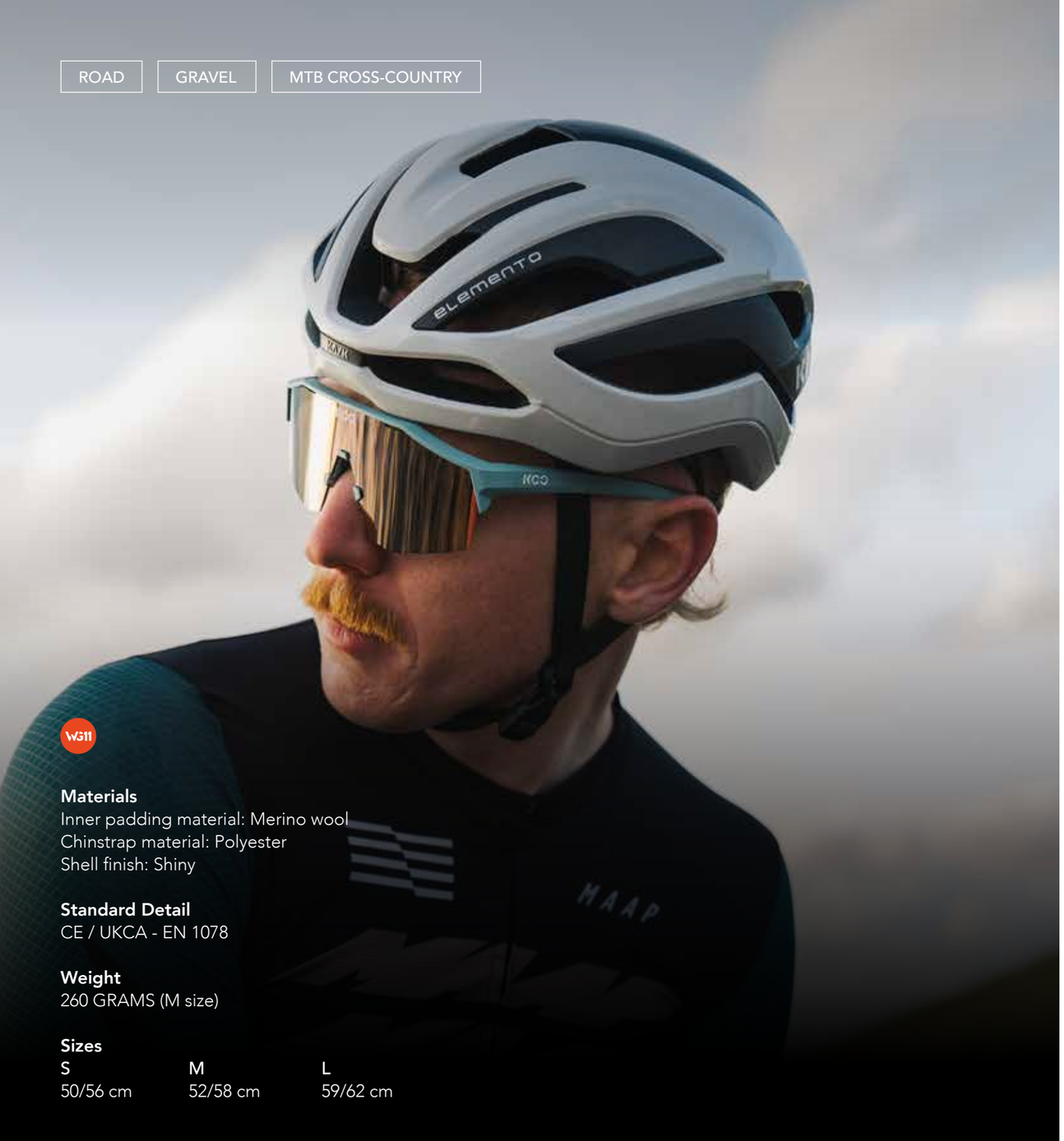

Materials
Inner padding material: Merino wool
Chinstrap material: Polyester
Shell finish: Shiny

Standard Detail
CE / UKCA - EN 1078

Weight
260 GRAMS (M size)

Sizes

S	M	L
50/56 cm	52/58 cm	59/62 cm

FEATURES

MULTIPOD

KASK's proprietary 3D-printed material that allows better management of rotational impact energy and increases ventilation. It behaves in the same way when a force is applied to it from any direction and it can reduce the shear stress between the head and the inside of the helmet.

OCTOFIT+

The new overinjected rubber dial provides improved finger grip. The vertical stabiliser has been redesigned for greater stability providing a customised fit for riders with longer hair. The ergonomic neck support ensures a fast and secure fit against the back of the head.

FLUID CARBON 12

A new composite material that allows to reduces the thickness of EPS from the inner shell, in order to improve ventilation and aerodynamics. It also generates a better energy distribution in case of an impact and guarantees a low friction surface between the helmet and the impact surface.

HYVENT

The structure and design of the shell implement the air flow and break up the exchangeable heat.

ELEMENTO

White
CHE00101.201

Red
CHE00101.204

Black
CHE00101.210

Silver
CHE00101.252

Oxford Blue
CHE00101.445

Sporty Grey
CHE00101.492

Kelly Green
CHE00101.493

Related product

WINTER CAP	CPA00021
INTERNAL SPARE PAD (Merino Wool)	CPA00033

ROAD | AERO

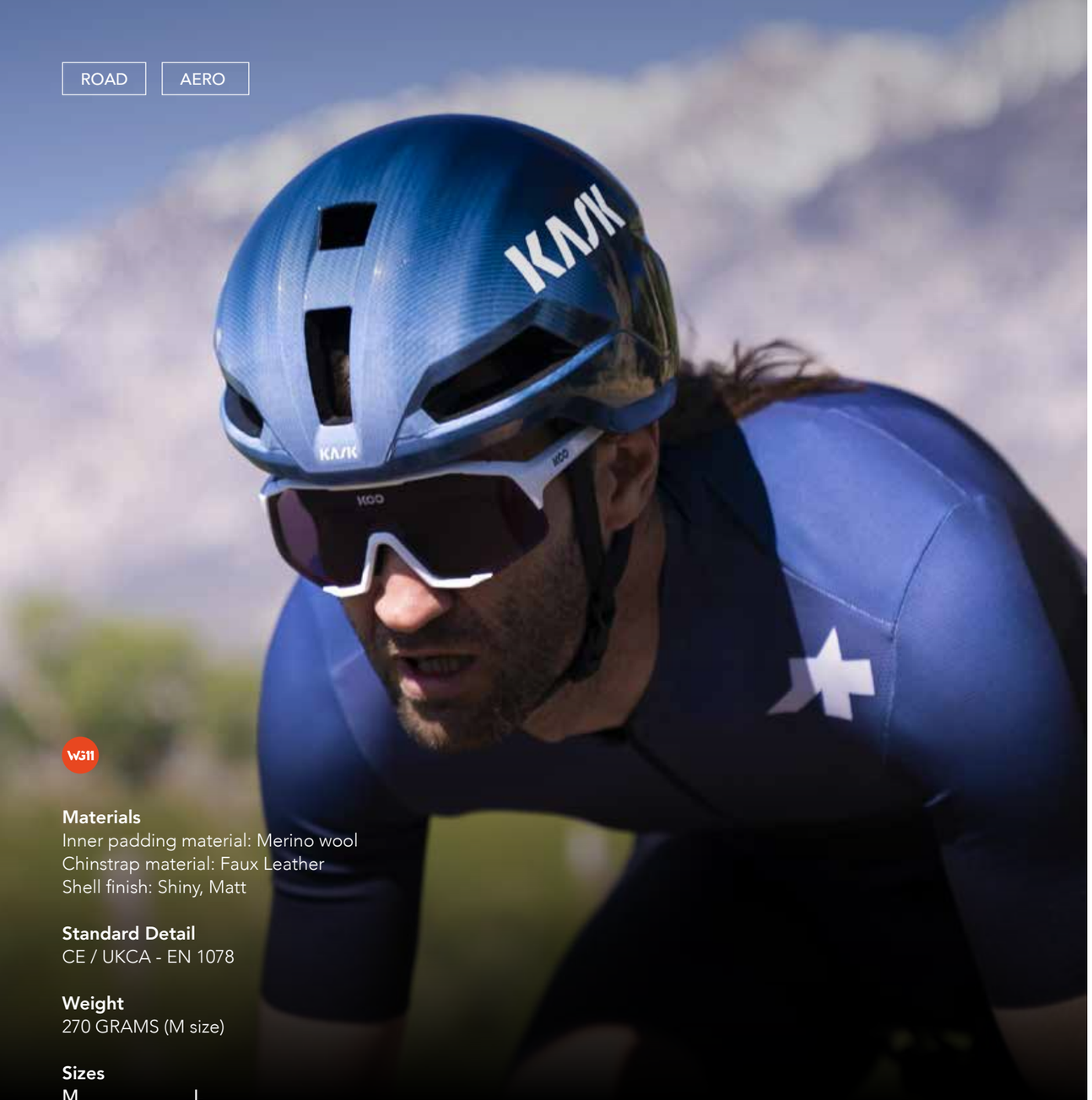

Materials
Inner padding material: Merino wool
Chinstrap material: Faux Leather
Shell finish: Shiny, Matt

Standard Detail
CE / UKCA - EN 1078

Weight
270 GRAMS (M size)

Sizes

M	L
52/58 cm	59/62 cm

FEATURES

MULTIPOD

KASK's proprietary 3D-printed that allows better management of rotational impact energy and increases ventilation. It behaves in the same way when a force is applied to it from any direction and it can reduce the shear stress between the head and the inside of the helmet.

OCTOFIT+

The new overinjected rubber dial provides improved finger grip. The vertical stabiliser has been redesigned for greater stability providing a customised fit for riders with longer hair. The ergonomic neck support ensures a fast and secure fit against the back of the head.

HYVENT

The structure and design of the shell implement the air flow and break up the exchangeable heat.

NIRVANA

White Matt
CHE00109.321

Black Matt
CHE00109.211

Ultraviolet
CHE00109.466

Blueberry Fade
CHE00109.467

Cherry Burst
CHE00109.465

Related product

WINTER CAP	CPA00021
INTERNAL SPARE PAD (Merino Wool)	CPA00034

ROAD | AERO

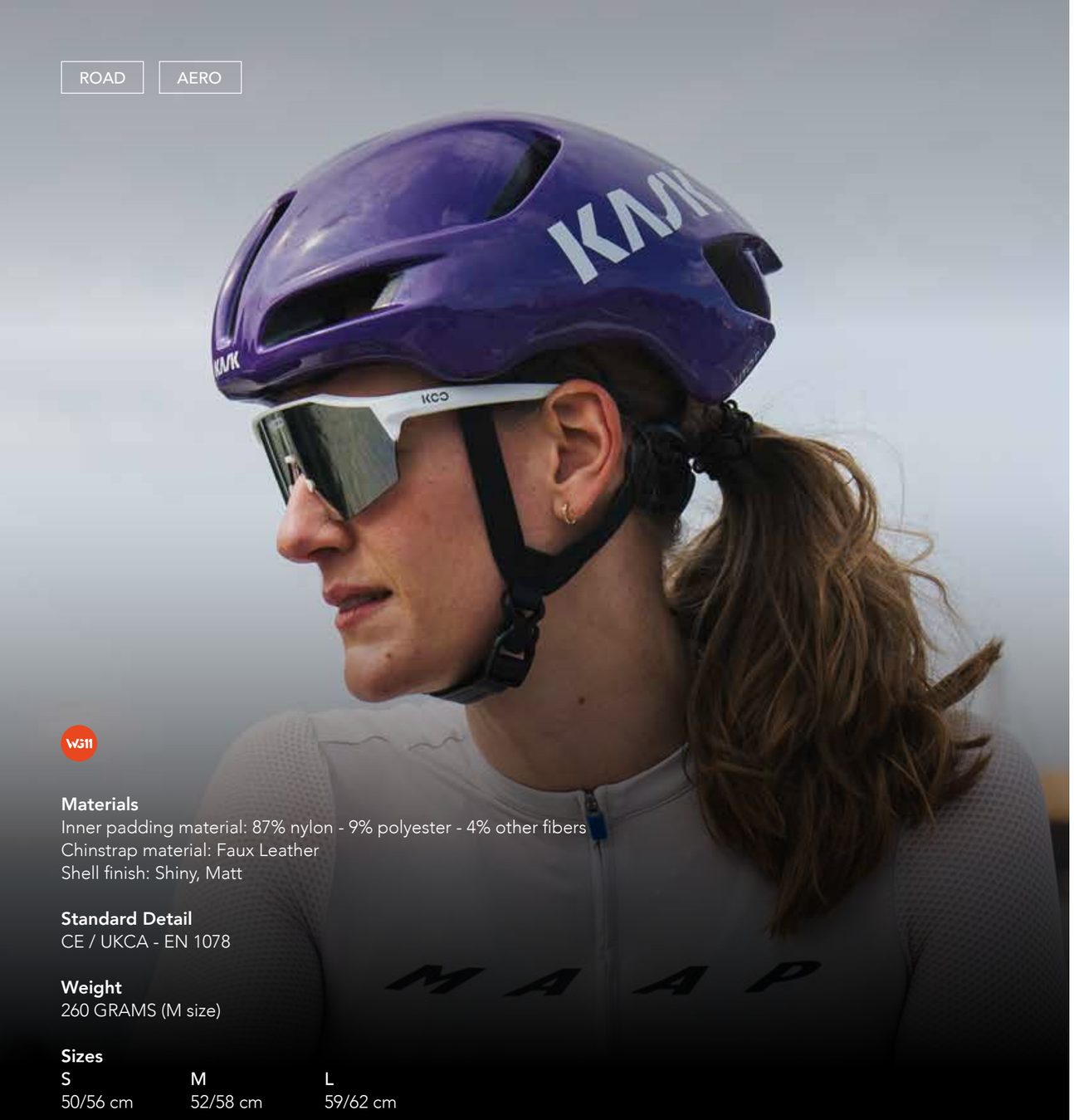

Materials
Inner padding material: 87% nylon - 9% polyester - 4% other fibers
Chinstrap material: Faux Leather
Shell finish: Shiny, Matt

Standard Detail
CE / UKCA - EN 1078

Weight
260 GRAMS (M size)

Sizes

S	M	L
50/56 cm	52/58 cm	59/62 cm

FEATURES

OCTOFIT+

The new overinjected rubber dial provides improved finger grip. The vertical stabiliser has been redesigned for greater stability providing a customised fit for riders with longer hair.The ergonomic neck support ensures a fast and secure fit against the back of the head.

HYVENT

The structure and design of the shell implement the air flow and break up the exchangeable heat.

UTOPIA Y

White
CHE00104.201

Black
CHE00104.210

Black Matt
CHE00104.211

Grey
CHE00104.313

White Matt
CHE00104.321

Oxford Blue
CHE00104.445

Celestial Yellow Matt
CHE00104.494

Grape
CHE00104.416

Caribe Green
CHE00104.499

Cognac Matt
CHE00104.496

Related product

WINTER CAP	CPA00021
INTERNAL SPARE PAD	CPA00031

ROAD | GRAVEL | MTB CROSS-COUNTRY

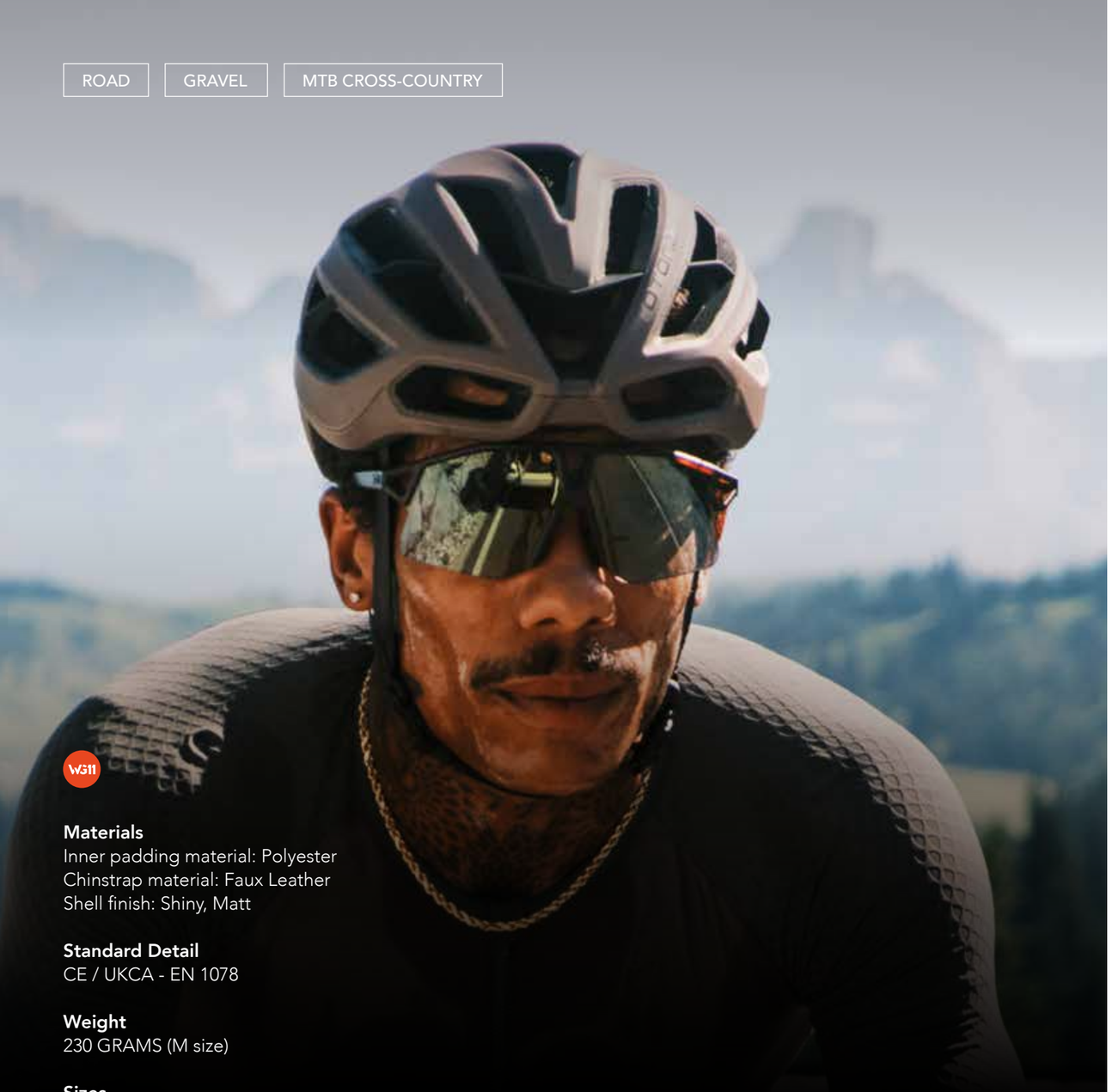

Materials
Inner padding material: Polyester
Chinstrap material: Faux Leather
Shell finish: Shiny, Matt

Standard Detail
CE / UKCA - EN 1078

Weight
230 GRAMS (M size)

Sizes

S	M	L
50/56 cm	52/58 cm	59/62 cm

FEATURES

INNER FRAME
The innovative inner strengthening frame offers a greater mechanical strength and a better compactness. In case of shock it prevents the helmet from breaking into many pieces, allowing greater safety for every rider.

OCTOFIT+
The new overinjected rubber dial provides improved finger grip. The vertical stabiliser has been redesigned for greater stability providing a customised fit for riders with longer hair. The ergonomic neck support ensures a fast and secure fit against the back of the head.

FAUX LEATHER CHINSTRAP
The anallergic and easy to clean chinstrap is extremely comfortable and helps to avoid irritation of the skin.

PROTONE ICON

White
CHE00097.201

Black
CHE00097.210

Black Matt
CHE00097.211

Grey
CHE00097.313

White Matt
CHE00097.321

Grey Matt
CHE00097.389

Forest Green Matt
CHE00097.461

Lavender Matt
CHE00097.458

Sahara Matt
CHE00097.460

Cognac Matt
CHE00097.496

Flamingo Matt
CHE00097.497

Celestial Yellow Matt
CHE00097.494

Espresso Brown Matt
CHE00097.495

Powder Blue Matt
CHE00097.498

Related product

WINTER CAP	CPA00021
INTERNAL SPARE PAD	CPA00030

ROAD | GRAVEL | MTB CROSS-COUNTRY

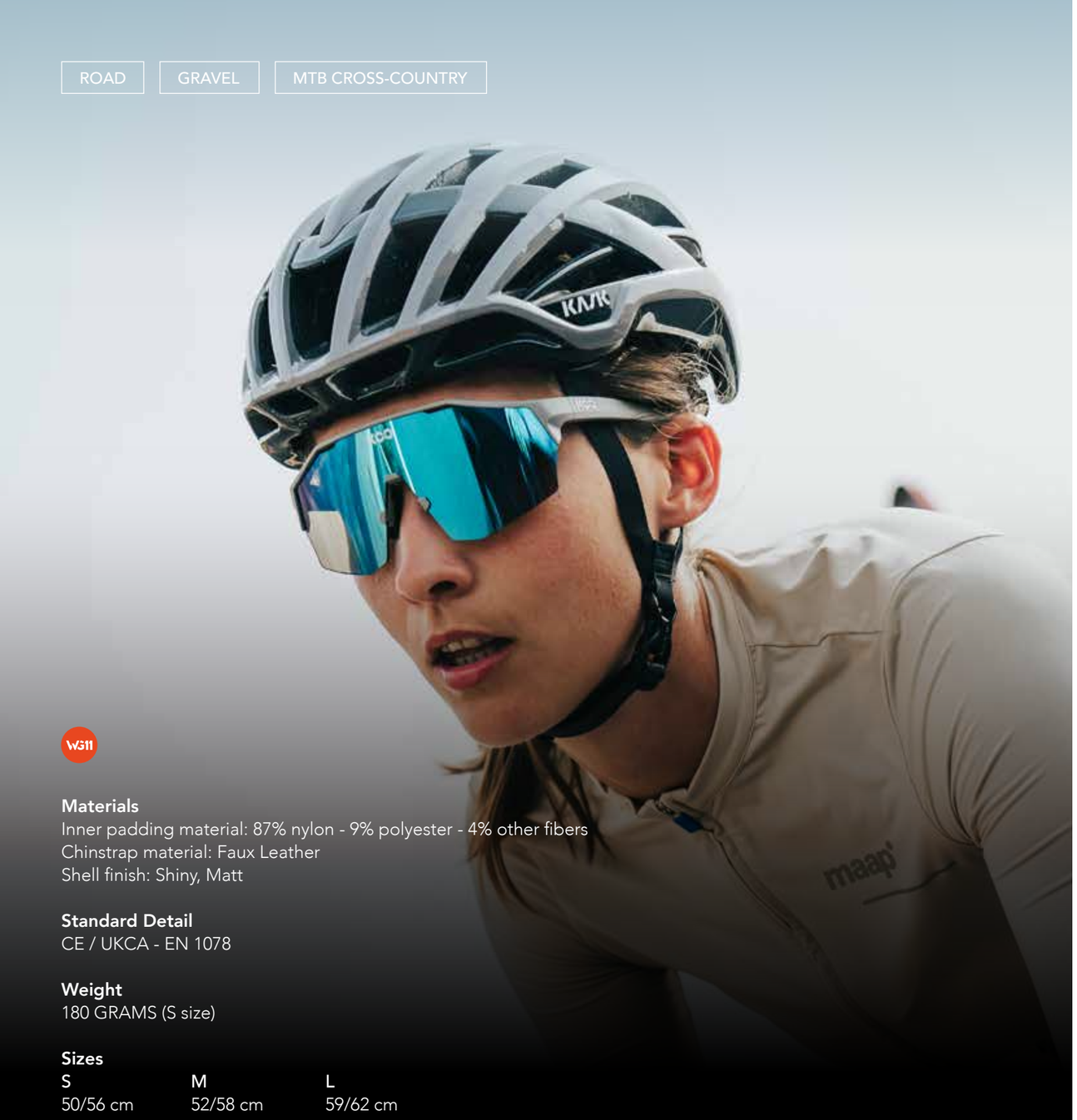

Materials
Inner padding material: 87% nylon - 9% polyester - 4% other fibers
Chinstrap material: Faux Leather
Shell finish: Shiny, Matt

Standard Detail
CE / UKCA - EN 1078

Weight
180 GRAMS (S size)

Sizes

S	M	L
50/56 cm	52/58 cm	59/62 cm

FEATURES

OCTOFIT
Rubberised Micro Dial adjuster provides improved finger grip. Floating cradle contact points combine internal gel pads for optimum comfort. These supports are designed to oscillate freely through 180° allowing a perfect fit on any shaped head. The Skeletal Brackets of the cradle have been designed and refined to provide the best fit and support whilst being as light as possible.

HYVENT
The structure and design of the shell implement the air flow and break up the exchangeable heat.

VALEGRO

White
CHE00052.201

Red
CHE00052.204

Black
CHE00052.210

Black Matt
CHE00052.211

Ash
CHE00052.349

Light Blue
CHE00052.218

Related product

WINTER CAP	CPA00021
INTERNAL SPARE PAD	CPA00017

ROAD GRAVEL

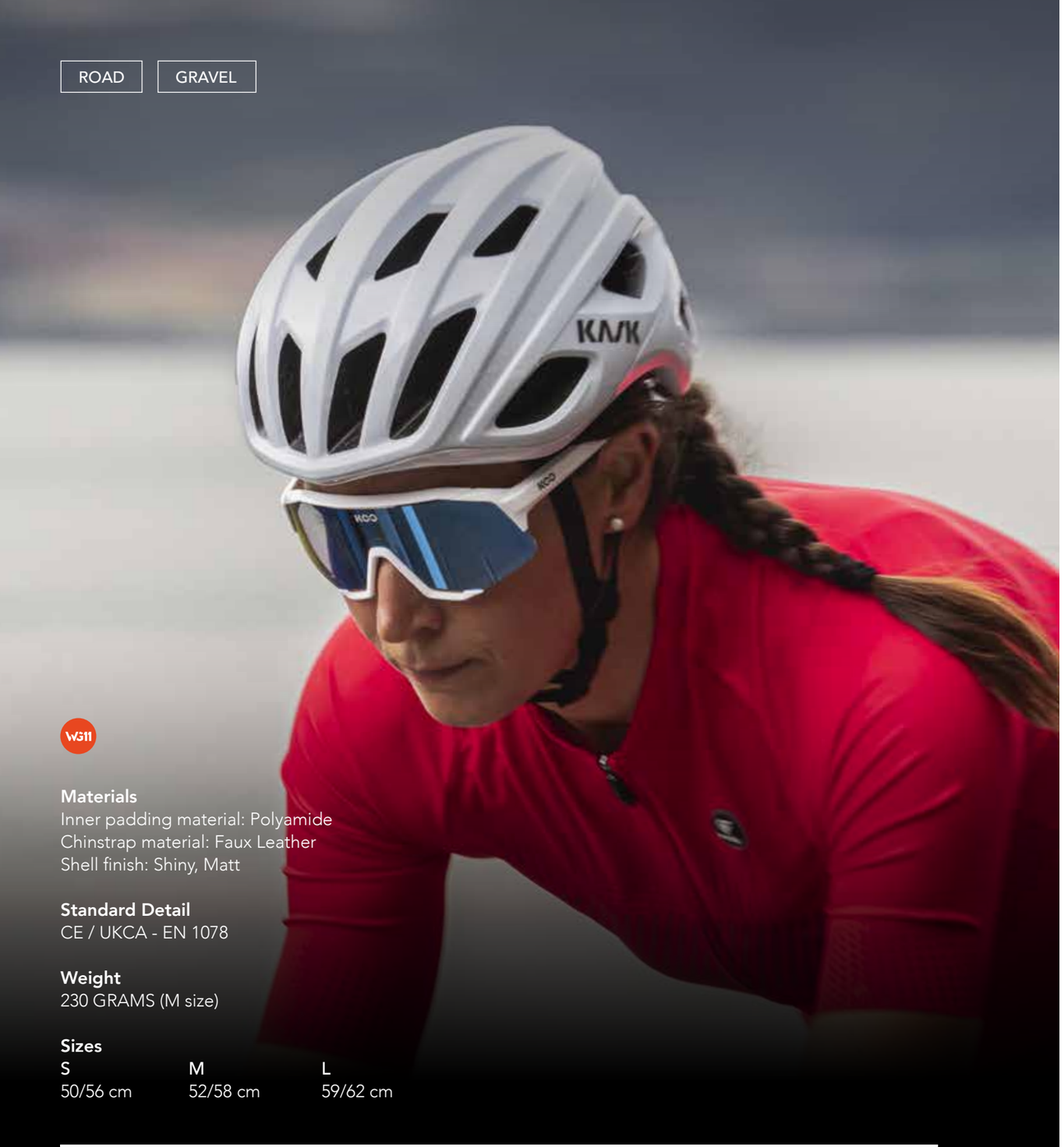

WS11

Materials
Inner padding material: Polyamide
Chinstrap material: Faux Leather
Shell finish: Shiny, Matt

Standard Detail
CE / UKCA - EN 1078

Weight
230 GRAMS (M size)

Sizes

S	M	L
50/56 cm	52/58 cm	59/62 cm

FEATURES

OCTOFIT
Rubberised Micro Dial adjuster provides improved finger grip. Floating cradle contact points combine internal gel pads for optimum comfort. These supports are designed to oscillate freely through 180° allowing a perfect fit on any shaped head. The Skeletal Brackets of the cradle have been designed and refined to provide the best fit and support whilst being as light as possible.

FAUX LEATHER CHINSTRAP
The anallergic and easy to clean chinstrap is extremely comfortable and helps to avoid irritation of the skin.

MOJITO^3

White
CHE00076.201

Red
CHE00076.204

Black
CHE00076.210

Black Matt
CHE00076.211

Grey
CHE00076.213

Yellow Fluo
CHE00076.221

Orange Fluo
CHE00076.222

Alpine
CHE00076.404

Atlantic Blue
CHE00076.407

Sea Ice
CHE00076.408

White Matt
CHE00076.321

Related product

WINTER CAP	CPA00021
INTERNAL SPARE PAD	CPA00025

ROAD | COMMUTE | GRAVEL

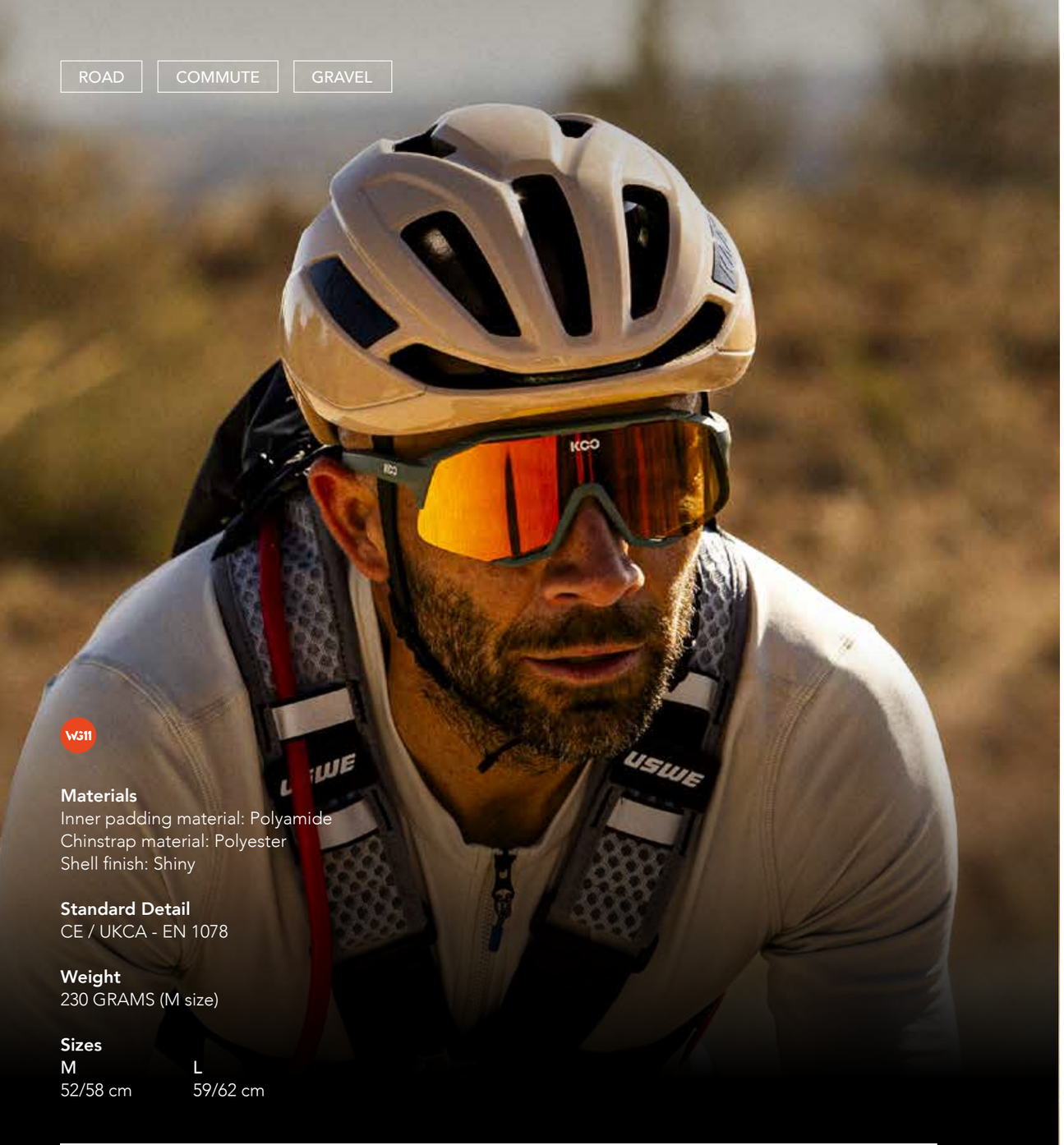

Materials
Inner padding material: Polyamide
Chinstrap material: Polyester
Shell finish: Shiny

Standard Detail
CE / UKCA - EN 1078

Weight
230 GRAMS (M size)

Sizes

M	L
52/58 cm	59/62 cm

FEATURES

ERGO FIT
A brand-new adjustment system engineered to improve fit and comfort. The redesigned wheel offers a better grip for managing micro adjustments, while improved aesthetics and design result in a new fit-system to provide optimal comfort and fit.

BLUE TECH PADDING
The padding material offers high breathability, while featuring anti-bacterial and antistatic properties.

White
CHE00100.201

Red
CHE00100.204

Black
CHE00100.210

Light Blue
CHE00100.218

Grey
CHE00100.313

Sea Ice
CHE00100.408

Wine Red
CHE00100.443

Tangerine
CHE00100.444

Oxford Blue
CHE00100.445

Sahara
CHE00100.446

Aloe Green
CHE00100.447

Related product

WINTER CAP	CPA00021
INTERNAL SPARE PAD	CPA00032

AERO

MISTRAL 3.0

*Clear visor included

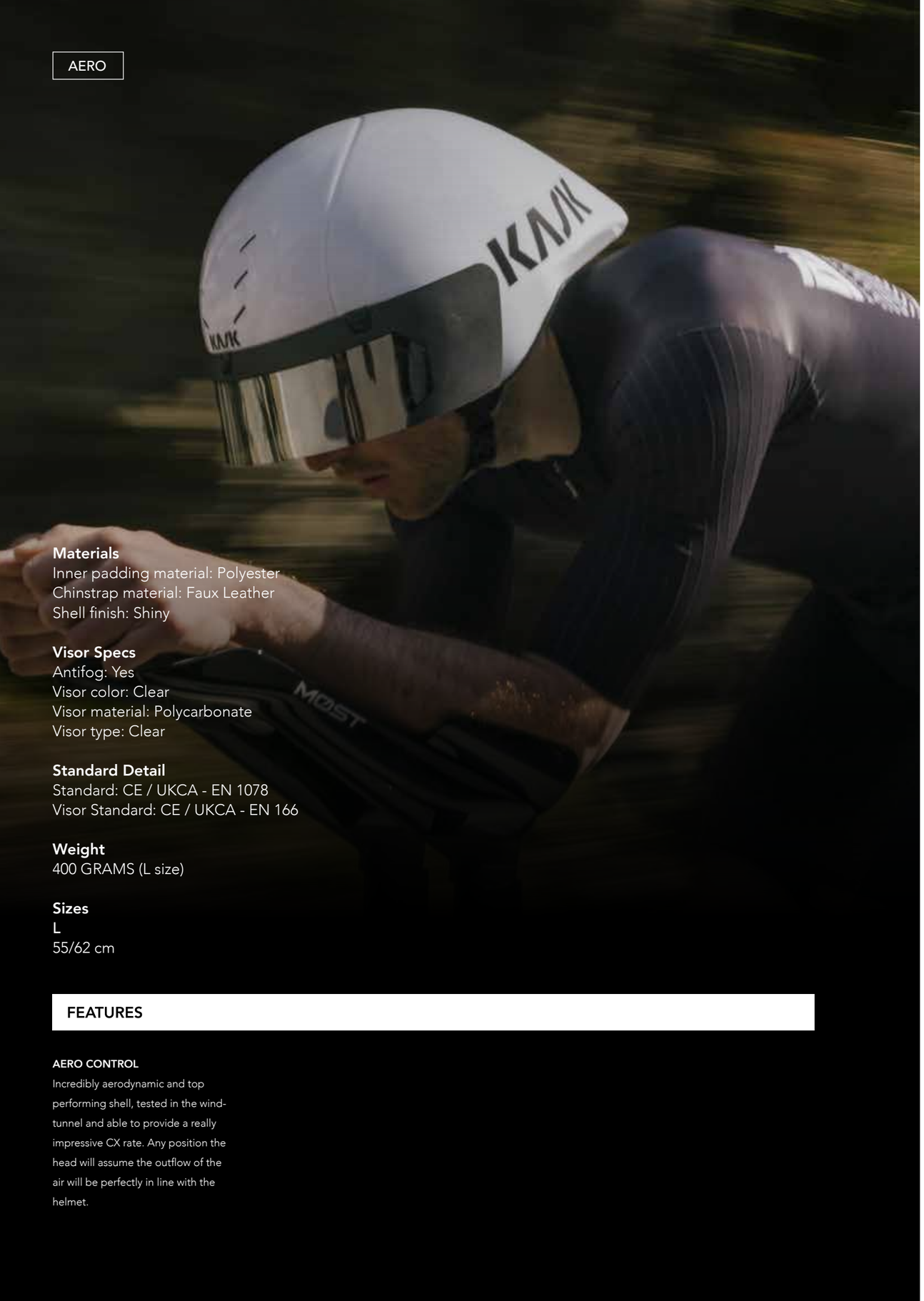

White
CHE00120.201

Black
CHE00120.210

Materials
Inner padding material: Polyester
Chinstrap material: Faux Leather
Shell finish: Shiny

Visor Specs
Antifog: Yes
Visor color: Clear
Visor material: Polycarbonate
Visor type: Clear

Standard Detail
Standard: CE / UKCA - EN 1078
Visor Standard: CE / UKCA - EN 166

Weight
400 GRAMS (L size)

Sizes
L
55/62 cm

FEATURES

AERO CONTROL
Incredibly aerodynamic and top performing shell, tested in the wind-tunnel and able to provide a really impressive CX rate. Any position the head will assume the outflow of the air will be perfectly in line with the helmet.

Related product

AERO PRO VISOR 3.0 CLEAR	CVI00023.500	AERO PRO VISOR 3.0 SILVER MIRROR	CVI00023.520
INTERNAL SPARE PAD	CPA00015		

AERO

Materials
Inner padding material: Polyester
Chinstrap material: Faux Leather
Shell finish: Shiny

Visor Specs
Antifog: Yes
Visor color: Clear
Visor material: Polycarbonate
Visor type: Clear

Standard Detail
Standard: CE / UKCA - EN 1078
Visor Standard: CE / UKCA - EN 166

Weight
350 GRAMS (M size)

Sizes

M	L
55/58 cm	59/62 cm

FEATURES

AERO CONTROL
Incredibly aerodynamic and top performing shell, tested in the wind-tunnel and able to provide a really impressive CX rate. Any position the head will assume the outflow of the air will be perfectly in line with the helmet.

MISTRAL

*Clear visor included

Black/Light Blue
CHE00050.219

Black/Red
CHE00050.226

Black/Anthracite
CHE00050.285

White/Silver
CHE00050.286

Related product

CLEAR VISOR CVI00013.500
SILVER MIRROR VISOR CVI00013.520
AERO PRO 2.0 VISOR CLEAR CVI00022.500
AERO PRO 2.0 VISOR SILVER MIRROR CVI00022.520
INTERNAL SPARE PAD CPA00015

AERO

Materials
Inner padding material: Polyester
Chinstrap material: Faux Leather
Shell finish: Shiny, Matt

Visor Specs
Visor color: Clear
Visor material: Polycarbonate
Visor type: Clear

Standard Detail
Standard: CE / UKCA - EN 1078
Visor Standard: CE / UKCA - EN 166

Weight
340 GRAMS (M size)

Sizes

M	L
55/58 cm	59/62 cm

FEATURES

AERO CONTROL
Incredibly aerodynamic and top performing shell, tested in the wind-tunnel and able to provide a really impressive CX rate. Any position the head will assume the outflow of the air will be perfectly in line with the helmet.

BAMBINO PRO

*Clear visor included

White
CHE00042.201

Red
CHE00042.204

Light Blue
CHE00042.218

Black
CHE00042.210

Black Matt
CHE00042.211

Related product

CLEAR VISOR CVI00009.500
SILVER MIRROR VISOR CVI00009.520
AERO PRO 2.0 VISOR CLEAR CVI00022.500
AERO PRO 2.0 VISOR SILVER MIRROR CVI00022.520
INTERNAL SPARE PAD CPA00015

BAMBINO PRO EVO

*Clear visor included

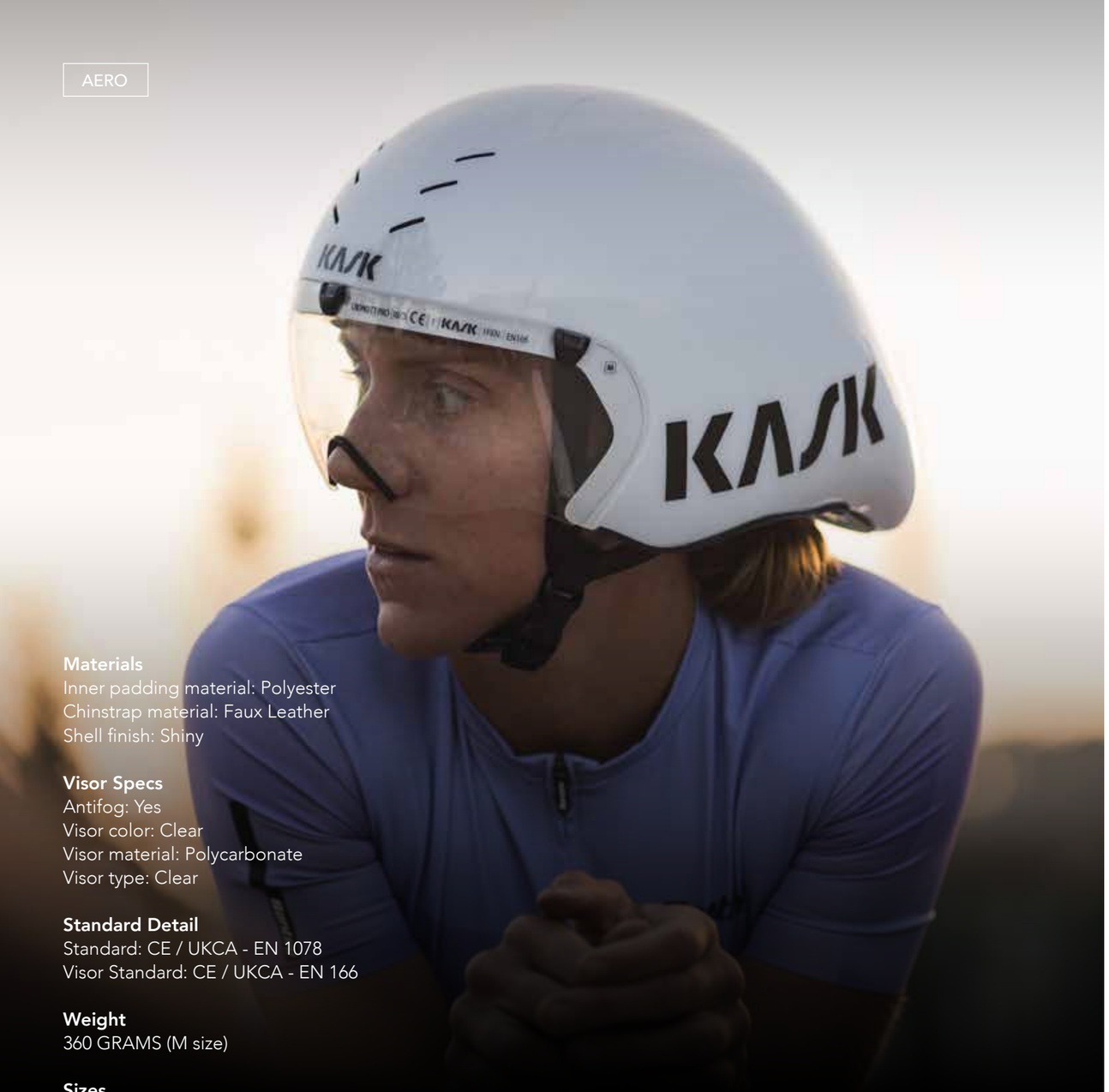

White
CHE00057.201

Black
CHE00057.210

Materials
Inner padding material: Polyester
Chinstrap material: Faux Leather
Shell finish: Shiny

Visor Specs
Antifog: Yes
Visor color: Clear
Visor material: Polycarbonate
Visor type: Clear

Standard Detail
Standard: CE / UKCA - EN 1078
Visor Standard: CE / UKCA - EN 166

Weight
360 GRAMS (M size)

Sizes

M	L
55/58 cm	59/62 cm

FEATURES

AERO CONTROL
Incredibly aerodynamic and top performing shell, tested in the wind-tunnel and able to provide a really impressive CX rate. Any position the head will assume the outflow of the air will be perfectly in line with the helmet.

Related product

CLEAR VISOR	CVI00021.500	SILVER MIRROR VISOR	CVI000021.520
AERO PRO 2.0 VISOR CLEAR	CVI00022.500	AERO PRO 2.0 VISOR SILVER MIRROR	CVI00022.520
INTERNAL SPARE PAD	CPA00015		

Materials
Inner padding material: Polyester
Chinstrap material: Faux Leather
Shell finish: Shiny

Visor Specs
Visor color: Smoke
Visor material: Polycarbonate
Visor type: Clear

Standard Detail
Standard: CE / UKCA - EN 1078,CPSC 1203
Visor Standard: CE / UKCA - EN 166

Weight
410 GRAMS (M size)

Sizes

S-M	M-L	L-XL
51/57 cm	54/59 cm	60/63 cm

URBAN R

*Light Smoke visor included

Onyx
CHE00085.228

Slate
CHE00085.229

Navy
CHE00085.230

Ivory
CHE00085.238

Champagne
CHE00085.239

Sugar Paper Blue
CHE00085.250

Silver
CHE00085.252

Bordeaux
CHE00085.278

Metal Green
CHE00085.388

Related product

INTERNAL SPARE PAD	CPA00026	CLEAR VISOR	CVI00018.500
LIGHT SMOKE VISOR	CVI00018.511	IRIDIUM MIRROR VISOR	CVI00018.524
SILVER MIRROR VISOR	CVI00018.520	RED MIRROR VISOR	CVI00018.519

Materials
Inner padding material: Polyamide
Chinstrap material: Polycotton
Visor Material: Polyester
Shell finish: Matt

Standard Detail
Standard: CE / UKCA - EN 1078

Weight
420 GRAMS (M size)

Sizes

M	L
52/58 cm	59/62 cm

MOEBIUS

Red
CHE00090.204

Lime
CHE00090.213

Light Blue
CHE00090.218

Onyx
CHE00090.228

Navy
CHE00090.230

Ivory
CHE00090.238

Champagne
CHE00090.239

Ash
CHE00090.349

Alpine
CHE00090.404

Jade
CHE00090.413

Related product

WINTER CAP	CPA00021
INTERNAL SPARE PAD	CPA00027

CYCLING

Accessories

WINTER CAP

CPA00021

The KASK merino wool Winter Cap acts as a helmet base layer to protect the head from wind chill, keeping you toasty for the coldest winter rides.

The internal padding in Merino wool keeps the body temperature stable, ensures high breathability, and dries quickly. External fabric in Tekseries guarantees a significant resistance to cold and wind combined with a high level of transpiration and resistance to water. To wear the winter cap just remove the inner padding of the helmet and make the cap adhere to the Velcro.

The Winter cap is available in three sizes and is compatible with most of our helmets across the range.

INTERNAL PAD

Every KASK helmet internal pad is antistatic, bacteriostatic, heat-regulating, and moisture-transferring. When internal pads are worn out, it's possible to get a replacement pad set, a specific one for every KASK helmet. Each replacement pad set is easy to install, by simply attaching it to the helmet's Velcro sections.

ELEMENTO
CPA00033

PROTONE ICON
CPA00030

NIRVANA
CPA00034

UTOPIA Y
CPA00031

VALEGRO
CPA00017

MOJITO³
CPA00025

SINTESI
CPA00032

ALL AERO HELMETS
CPA00015

URBAN R
CPA00026

MOEBIUS
CPA00027

VISOR

All KASK aero helmets have an easily removable magnetic visor. The magnetic visor for aero helmets is available in two colorways: clear and mirror.

Urban R helmet has an interchangeable visor that can be easily swapped in and out with a click using the One-Move Switch System. The visor is available in four colorways: clear, iridium mirror, red mirror, silver mirror, and light smoke.

URBAN R

CLEAR VISOR
CVI00018.500

IRIDIUM MIRROR VISOR
CVI00018.524

LIGHT SMOKE VISOR
CVI00018.511

RED MIRROR VISOR
CVI00018.519

SILVER MIRROR VISOR
CVI00018.520

BAMBINO PRO

CLEAR VISOR
CVI00009.500

SILVER MIRROR VISOR
CVI00009.520

BAMBINO PRO EVO

CLEAR VISOR
CVI00021.500

SILVER MIRROR VISOR
CVI00021.520

MISTRAL

CLEAR VISOR
CVI00013.500

SILVER MIRROR VISOR
CVI00013.520

BAMBINO PRO - BAMBINO PRO EVO - MISTRAL

AERO PRO VISOR 2.0 CLEAR
CVI00022.500

AERO PRO VISOR 2.0 SILVER MIRROR
CVI00022.520

MISTRAL 3.0

AERO PRO VISOR 3.0 CLEAR
CVI00023.500

AERO PRO VISOR 3.0 SILVER MIRROR
CVI00023.520

KASK

EVENT

Sales support

SOFT GOODS

KASK TEE
XME00197-MAN-210
S-XXL

KASK TEE
XME00197-MAN-201
S-XXL

KASK TEE
XME00197-WOMAN-210
XS-L

KASK TEE
XME00197-WOMAN-201
XS-L

KASK FULL ZIP HOODIE
XME00196-210
XS-L

KASK CREWNECK
XME00195-205
XS-XXL

KASK POLO
XME00191-MAN-210
S-XL

KASK POLO
XME00191-WOMAN-201
XS-L

KASK VEST JACKET
XME00194-210
XS-XL

KASK SHELL JACKET
XME00192-210
XS-XL

KASK PUFFER JACKET
XME00193-210
XS-M

KASK BEANIE
XME00189-210

KASK CAP
XME00190-210

KASK CAP
XME00190-205

EVENT MATERIAL

INFLATABLE GAZEBO
XDI00165
500x500 cm

SINGLE WALL
XDI00166
For Inflatable Gazebo

GAZEBO 3X3 M
XEV00001
300x300 cm

SINGLE WALL
XEV00001-TELO-01
For Gazebo 3x3

INDOOR FLAG
XDI00144
50x200 cm

OUTDOOR FLAG
XDI00143
70x430 cm

PLASTIC GROUND-DRILL BASE
XDI00114
For KASK Outdoor Flag

CONCRETE BASE
XDI00163
For KASK Outdoor Flag

KASK HELMET BAG - BIG
UAC00004
125x30 cm

KASK HELMET BAG - SMALL
UAC00006
80x30 cm

DIRECTOR CHAIR
XDI00167

BANNER TNT 50MT
XDI00164

POUF
XDI00091
45x45 cm

MERCHANDISING

STICKERS 10CM - 50 PCS
XME00125

STICKERS 20CM - 50 PCS
XME00126
Lime - Black - White

KASK BIG UMBRELLA
XME00161

PENCIL - 50PCS
XME00124

PEN - 50PCS
XME00123

BLOCKNOTES
XME00015

NOTEBOOK
XME00112

MUSETTE
XME00129

KEY HOLDER - 50 PCS
XME00128

LANYARD - 50 PCS
XME00130

NECK WARMER - 50 PCS
XME00131
Lime - Black

WATER BOTTLE
XME00038

STAINLESS STEEL WATER BOTTLE
XME00052

CRANIOMETER CM
XME00122

CRANIOMETER INCHES
XME00119

KASK TRAINING TOWEL
XME00166

RIDER BACKPACK 22L - NAVY
XME00050-230.00

RIDER BACKPACK 22L - BLACK
XME00050-210.00

POP

BRAND BLOCK
XDI00175
30x4x10 cm

LOGO PANEL
XDI00176
90x26,5 cm

WINDOW STICKERS 20CM - 50 PCS
XME00127

SLATWALL EVENT DISPLAY
XEV00073
65x38x187 cm

DOUBLE FACE DISPLAY
XDI00173-CYCLING
42x40x190 cm

FRAME STAND
XDI00146-CYCLING
40x35x175 cm

LOGOBLOCK
XDI00171-CYCLING
25x5x22 cm

HANGER
XDI00188

GRAPHIC HOLDER
XDI00195- CYCLING-
42,6x29,8x13,6 cm

GLORIFIER
XDI00152
32x39x155,5 cm

DESK GLORIFIER
XDI00151
32x34x40,5cm

CENTRAL AREA DISPLAY 8 HELMETS
XDI00145
160x80x20 cm

WALL DISPLAY
XDI00148
120x35,5x220 cm

WELCOME MAT
XME00134
70x50 cm

SLATWALL MIRROR
XDI00197-
21x31x0,25 cm

SLATWALL GRAPHIC HOLDER
XDI00194-
21,5x31,5x0,25 cm

POP VISUALS

LOGOBLOCK

LOGOBLOCK 7 GRAPHICS KIT
XDI00172-CYCLING

DESK GLORIFIER

DESK GLORIFIER GRAPHIC
XDI00169-ELEMENTO

DESK GLORIFIER GRAPHIC
XDI00169-NIRVANA

DESK GLORIFIER GRAPHIC
XDI00169-PROTONE-ICON

DESK GLORIFIER GRAPHIC
XDI00169-VALEGRO

DESK GLORIFIER GRAPHIC
XDI00169-UTOPIA-Y

DESK GLORIFIER GRAPHIC
XDI00169-MOJITO-3

DESK GLORIFIER GRAPHIC
XDI00169-SINTESI

DESK GLORIFIER GRAPHIC
XDI00169-URBAN-R

Reproduction forbidden. All rights reserved. Some of the products shown may differ from products supplied. KASK S.P.A. reserves the right to make variations/improvements of any of the product or data shown at any time, without notice. All the products are designed and engineered by KASK S.P.A. Italy. The illustrations, descriptions and dimensions shown in this catalogue are indicative. KASK reserves the right to modify or improve them in any moment. The colours have been reproduced with the accuracy allowed by the process of printing. KASK products are not fruit of child labour.

KASK S.P.A.
Via Firenze 5, 24060 Chiuduno (BG) - ITALY
T. +39 035 4427497
info@kask.com - kask.com

KASK sport

kask_sport

Kask Sport

Kask Cycling

Kask_Sport

KASK Sport

SILCA

Art.-Nr. | Réf.	Bezeichnung | Description

CYCLING PUMPS

SUPERPISTA ULTIMATE HIRO EDITION

AM-PU-SP2-ASY-011 **SuperPista Ultimate «Hiro Edition»**
Silver, 3.2 kg

- ■ Vollständige Konstruktion aus Edelstahl, Aluminium, Holz und Messing
- ■ Ergonomischer Griff aus Purpleheart-Holz und Feinguss-Edelstahl
- ■ Dicke Vollnarbenleder-Kolbendichtung – effizienter und langlebiger als Gummi
- ■ Vollständige IGUS-Linearlager für ultimative Leichtgängigkeit
- ■ Stahlummantelter 12 000-PSI-Schlauch, high-end Labormanometer, magnetischer «Hiro»-Edelstahlpumpkopf, magnetisches Pumpkopf-Dock, 800 g Pumpenbasis mit «Surfboard»
- ■ Druck 0 –160 PSI (0 – 11 Bar), Schlauch 130 cm, Kolben 32 mm
- □ *Construction entièrement en acier inoxydable, aluminium, bois et laiton.*
- □ *Manche ergonomique en bois de Purpleheart et acier inoxydable moulé à la cire perdue.*
- □ *Joint de piston en cuir épais pleine fleur - plus efficace et durable que le caoutchouc*
- □ *Roulements linéaires IGUS complets pour une douceur ultime*
- □ *Tuyau en acier de 12 000 PSI, manomètre de laboratoire haut de gamme, tête de pompe magnétique en acier inoxydable "Hiro", socle de tête de pompe magnétique, base de pompe "planche de surf" de 800 g*
- □ *Pression 0 -160 PSI (0 - 11 Bar), tuyau 130 cm, piston 32 mm*

SUPERPISTA DIGITAL

AM-PU-002-ASY-0100 **Super Pista Digital**
Black

- ■ Kombiniert ein Vollmetall-Stosskolbendesign mit der klassischen italienischen Lederkolbenscheibe und selbstschmierenden Linearlager für eine effiziente und laufruhige Pumpe
- ■ Hochmontiertes, auf 1 % genaues Digitalmanometer mit Hintergrundbeleuchtung, einstellbarem Druckalarm und einstellbaren Druckeinheiten
- ■ Magnetischer «Hiro»-Pumpkopf mit magnetischem Dock
- ■ Kolben aus 100 % Metall, Griffe aus Eschenholz
- ■ Luft-Rückschlagventil aus Messing, Maximal 220 PSI/15 Bar
- □ *Combine une conception de piston à bout entièrement métallique avec le disque de piston classique en cuir italien et des roulements linéaires autolubrifiants pour une pompe efficace et fluide*
- □ *Manomètre numérique de haute qualité, précis à 1 %, avec rétro-éclairage, alarme de pression réglable et unités de pression réglables*
- □ *Tête de pompe magnétique «Hiro» avec dock magnétique*
- □ *Piston 100 % métal, poignées en bois de frêne*
- □ *Clapet anti-retour en laiton, Maximum 220 PSI/15 Bar*

Art.- Nr. | Réf.	Bezeichnung | Description

PISTA PLUS

AM-PU-003-ASY-0100 **Pista Plus**
Grey

- Der strapazierfähige Stahlzylinder, die 3 mm dicke, hocheffiziente Lederkolbenkonstruktion, kombiniert mit Messing-Luftbrücke und Rückschlagventil, sorgen für eine unübertroffene Langlebigkeit
- 2 % Genaues, hochbelastbares 2,5" (64 mm) Manometer mit einem Druck von 220 PSI/15 Bar
- Luftbrücke und Rückschlagventile aus Messing, Eschenholzgriffe
- Integriertes Schrader-Futter plus aufpressbares Presta-Futter aus Aluminium mit Entlüftungsventil
- *Cylindre en acier robuste, piston en cuir de 3 mm d'épaisseur et à haut rendement, combiné à un pont d'air et à un clapet anti-retour en laiton, pour une durabilité inégalée*
- *2 % Manomètre précis et robuste de 64 mm (2,5") avec une pression de 15 Bar (220 PSI)*
- *Pont pneumatique et clapets anti-retour en laiton, poignées en bois de frêne*
- *Mandrin Schrader intégré et mandrin Presta en aluminium avec valve de purge.*

Art.-Nr. | Réf.	Bezeichnung | Description

TERRA FLOOR PUMP

AM-PU-009-ASY-0100 **Terra Floor Pump**
Green/Tan

- Einzigartiger zweistufiger analoger Manometer für großvolumigen Reifen, zeigt 0-30psi in 0,5psi-Schritten an
- Reifen mit geringerem Volumen in 2 PSI-Schritten bis zu 120 PSI aufpumpen
- Leichter und langlebiger Aluminiumzylinder
- Griff aus Eschenholz in voller Größe mit Schlauchführung
- Verriegelbares Presta/Schrader-Pumpaufsatz aus Aluminium mit Entlüftungsknopf
- *Manomètre analogique à deux niveaux unique en son genre pour les pneus de grand volume, indique 0-30psi par incréments de 0,5psi*
- *Gonfle les pneus de faible volume par paliers de 2 PSI jusqu'à 120 PSI*
- *Cylindre en aluminium léger et durable*
- *Poignée pleine taille en bois de frêne avec guide-tuyau*
- *Douille Presta/Schrader verrouillable en aluminium avec bouton de dégonflage*

PISTA

AM-PU-001-ASY-0101 **Pista**
Red

- Die Legende lebt! Top-Silca-Qualität zum bezahlbaren Preis
- Leistungsstarke, langlebige, kompakte Standpumpe, die leicht alle Reifendruckanforderungen erreicht, während sie nur wenig Platz benötigt
- Fester Stahlzylinder, kompakter Eschenholzgriff mit Schlauchführungen
- Hocheffiziente SILCA-Lederkolbenbaugruppe und Rückschlagventile aus Messing
- Langer Einfüllschlauch mit integriertem Schrader-Futter
- Aufschiebbares Presta-Futter aus Aluminium mit Entlüftungsventil
- Nenndruck bis max. 220 PSI/15 Bar
- *La légende est vivante La meilleure qualité Silca à un prix abordable*
- *Pompe au sol puissante, durable et compacte qui répond facilement à toutes les exigences en matière de pression des pneus tout en prenant un minimum d'espace*
- *Cylindre en acier haute résistance, poignée compacte en bois de frêne avec guides de tuyau*
- *Piston en cuir SILCA à haute efficacité et clapets anti-retour en laiton*
- *Long tuyau de remplissage avec mandrin Schrader intégré*
- *Mandrin Presta en aluminium coulissant avec soupape de purge*
- *Pression nominale jusqu'à max. 220 PSI/15 Bar*

CUAG SPORTS AG | C/O HOHLE GASSE | ARTHERSTR. 60 | 6405 IMMENSEE | +41412595100 | INFO@CUAGSPORTS.COM | CUAGSPORTS-SHOP.COM

Art.-Nr. | Réf.	Bezeichnung | Description

IMPERO ULTIMATE II FRAME PUMP*

AM-PU-008-ASY

Impero Ultimate II Frame Pump
Black, 290 g

S (44–49 cm), M (49–54 cm), L (54–59 cm), XL (59–64 cm)

- Effizienteste Rahmenpumpe der Welt (112 Hübe = 100 Psi)
- Für Presta- und Schrader-Ventile und Rohrdurchmesser von 1 – 2,5"
- 100-%-Metallkonstruktion, kein Plastik
- 2-stufig gedichteter Elastomerpumpkopf
- Silikondämpfer schützen die Rahmenlackierung
- *La pompe à cadre la plus efficasse du monde (112 pressions = 100 Psi)*
- *Pour valves Presta et Schrader et cadres de 1 à 2,5 pouces (diamètre de tube)*
- *Construction 100 % métallique, pas de platique*
- *Joint d'étanchéité profilé sur deux niveaux en élastomère*
- *Protecteurs en silicone pour préserver le vernis*

*Auf Bestellung | *Sur demande*

POCKET IMPERO II PUMP

AM-PU-010-ASY-0100

Pocket Impero II Pump
Black, 150 g

- Die Mini-Pumpe, um alle anderen in den Schatten zu stellen. Die Lederdichtung und die Metallkonstruktion machen diese Pumpe zur effizientesten Minipumpe auf dem Markt. Sparen Sie Zeit und Frust mit dem Pocket Impero.
- Hitze ist der Feind von Minipumpen. Mehr Hübe erzeugen mehr Reibung, was zu mehr Wärme führt, und Wärme ist Energieverschwendung. Im Gegensatz zu den meisten Minipumpen leidet die POCKET IMPERO im heißen Zustand nicht unter Effizienzverlusten. POCKET IMPERO ist eine Mischung aus einer Hochdruck- und einer Hochleistungspumpe. Mit 200 Hüben erreicht die POCKET IMPERO höhere Drücke als jede andere Taschenpumpe, die jemals im BikeRadar-Testprotokoll getestet wurde, was bedeutet, dass sie mehr Luft mit weniger Verlusten fördert als Pumpen mit hohem Druck oder hohem Volumen. Die einzigartige Slide-Lock-Silikonhülle verbessert den Halt und dient gleichzeitig als Griffschloss, wenn Sie sich in der Tasche befinden.
- Leistungsbeschreibung: Volllegierungskonstruktion, Kolbendichtung aus Leder, Slide-Lock-Silikonhülle, 150 g, 8 Zoll
- *La mini-pompe à faire honte à tous les autres. Le joint en cuir et la construction en métal en font la mini-pompe la plus efficace du marché. Gagnez du temps et évitez les frustrations avec le Pocket Impero.*
- *La chaleur est l'ennemi des mini-pompes. Plus de coups génèrent plus de friction, ce qui produit plus de chaleur et la chaleur est une énergie gaspillée. Contrairement à la plupart des mini-pompes, POCKET IMPERO ne souffre pas de perte d'efficacité à chaud. POCKET IMPERO se situe entre une pompe haute pression et une pompe à haut volume. Avec 200 coups, la POCKET IMPERO atteint des pressions plus élevées que toute autre pompe de poche jamais testée dans le protocole de test BikeRadar, ce qui signifie qu'elle pousse plus d'air avec moins de pertes que les pompes à haute pression ou à haut volume. Le manchon unique en silicone Slide-Lock améliore l'adhérence et sert également de verrou de poignée lorsque vous êtes dans votre poche.*
- *Spécifications: Construction entièrement en alliage, Joint de piston en cuir, Manchon en silicone à glissière, 150 g, 8 pouces*

Art.-Nr. | Réf.	Bezeichnung | Description

TATTICO MINI PUMP

AM-PU-TAT-ASY-001 **Tattico Mini Pump**
Black, 290 g

- ■ Hocheffiziente Minipumpe mit einem ergonomischen Design für eine einfache Bedienung
- ■ Schlauch und Ventiele sind im Innenrohr versteckt und liefern bis zu 10 % mehr Luft pro Hub
- ■ Versteckter Kühlkörper, der einen hohen Prozentsatz der beim Pumpen entstehenden Wärme absorbiert.
- ■ Schaft und Griffflächen aus 6061er-Legierung, hocheffiziente Kolbenkonstruktion
- ■ Langer ausziehbarer Füllschlauch mit arretierbarem Presta/Schrader-Futter
- ■ Für Presta- und Schrader-Ventile, bis 120 PSI/8,2 Bar, Länge 24 cm
- ■ Inklusive Direktmontagehalterung mit Halteband
- □ *Mini-pompe très efficace au design ergonomique pour une utilisation facile*
- □ *Le tuyau et les valves sont cachés à l'intérieur de la chambre à air et fournissent jusqu'à 10 % d'air en plus par course*
- □ *Dissipateur thermique caché qui absorbe un pourcentage élevé de la chaleur générée pendant le pompage*
- □ *Arbre et surfaces de préhension en alliage 6061, conception du piston à haut rendement*
- □ *Long tuyau de gonflage extensible avec mandrin Presta/Schrader verrouillable*
- □ *Pour les valves Presta et Schrader, jusqu'à 120 PSI/8.2 Bar, longueur 24 cm*
- □ *Comprend un support de montage direct avec une bande de retenue*

GRAVELERO MINI PUMP W/ BOTTLE CAGE MOUNT

AM-PU-011-ASY-0100 **Gravelero mini pump w/ bottle cage mount**
139 g

- ■ Kompakte Hochleistungspumpe mit 35 % mehr Luftvolumen
- ■ Basierend auf dem preisgekrönten Tattico-Design, optimiert für Gravel- und Offroad-Einsatz
- ■ Liefert bei gleicher Länge 35 % mehr Luft pro Hub
- ■ Glatte Außenstruktur und verbesserte Abdichtung für Schutz vor Schmutz und Schlamm
- ■ Leichtgewicht mit Aluminiumgriff und -zylinder
- ■ Einziehbarer Schlauch mit umkehrbarem Ventilkopf (Presta/Schrader) und Daumenverriegelung
- ■ Bis 80 psi / 5,5 bar, Länge 24,3 cm
- ■ Inklusive Direktmontagehalterung mit Halteband
- □ *Pompe compacte haute performance avec 35 % de volume d'air en plus*
- □ *Basée sur le design primé de la Tattico, optimisée pour une utilisation sur gravier et tout-terrain*
- □ *Fournit 35 % d'air en plus par coup pour une longueur identique*
- □ *Structure extérieure lisse et étanchéité améliorée pour une protection contre la saleté et la boue Légère avec poignée et cylindre en aluminium*
- □ *Tuyau rétractable avec tête de valve réversible (Presta/Schrader) et verrouillage au pouce Jusqu'à 80 psi / 5,5 bar, longueur 24,3 cm*
- □ *Support de montage direct avec sangle de fixation inclus*

Art.- Nr. | Réf. Bezeichnung | Description

AIR CHUCKS & SPARE PARTS

«HIRO V2» DISC WHEEL ADAPTER

AM-PU-CHU-ASY-006 **«Hiro V2» Disc Wheel Adapter**
Pumpaufsatz mit Hebelverschluss
Adaptateur avec fermeture rapide
Presta, 20 Bar (300 PSI)

- ■ Der Profi-Aufsatz für den anspruchsvollen Mechaniker
- ■ Edelstahl, kompatibel mit Scheibenrad
- □ *Pour les mécaniciens les plus exigeants*
- □ *Acier inoxydable, compatible avec roues à disque, pour valves Presta*

ALUMINUM PRESTA CHUCK

AM-PU-CHU-ASY-009 **Aluminum Presta Chuck**

- ■ Wir hatten das Bedürfnis, dieses ikonischste aller Fahrradwerkzeuge als Kunstobjekt in Erbstücksqualität neu zu interpretieren. Mit größter Sorgfalt wurde das Teil mit monokristallinen Diamantwerkzeugen bearbeitet, um eine perfekte Oberfläche zu erhalten, während die endgültige Haptik des Teils von der Untersuchung von mehr als 20 verschiedenen Rändelungsarten und -tiefen profitiert, so dass es sich in Ihren Händen genau so anfühlt, wie es ein Leben lang nützliche Freude bereitet. Dies ist wirklich ein Werkzeug, das Sie an Ihre Kinder weitergeben werden und diese wiederum an ihre Kinder.
- □ *Nous avons ressenti le besoin de réimaginer le plus emblématique des outils de cyclisme en un objet d'art de qualité patrimoniale. Le plus grand soin a été apporté à l'usinage de la pièce à l'aide d'un outil en diamant monocristallin afin d'obtenir une finition de surface parfaite, tandis que la sensation finale de la pièce bénéficie d'une étude de plus de 20 styles et profondeurs de moletage différents, afin qu'elle soit parfaite dans vos mains et qu'elle vous procure une vie de plaisir. C'est vraiment un outil que vous transmettrez à vos enfants et qu'ils transmettront à leur tour aux leurs.*

THREAD ON SCHRADER CHUCK

AM-PU-CHU-ASY-004 **Thread On Schrader Chuck**

- ■ Dieser Pumpkopf hat einen Schlauchanschluss an einem Ende und Gewinde für Ventile auf der anderen Seite und ist die ideale Ergänzung, wenn Sie eine neue Edelstahl Presta Chuck oder CP1 Disc Adapter für Ihre ältere Pumpe kaufen möchten.
- ■ Dieses Teil ist aus vernickeltem Messing gefertigt und verwendet einen O-Ring zur Abdichtung zum Ventil.
- ■ Der Schlauchanschluss passt in alle SILCA Schläuche, sowohl alte als auch neue. Passt auf Schrader-Ventile und alle SILCA-Chucks mit Schrader-Außengewinde (17-4 Presta-Chuck und CP1 Disc Adapter).
- □ *Cette tête de pompe est dotée d'un raccord de tuyau à une extrémité et de filetages pour les valves à l'autre. C'est le complément idéal si vous souhaitez acheter un nouvel adaptateur Presta Chuck en acier inoxydable ou CP1 Disc pour votre ancienne pompe.*
- □ *Cette pièce est fabriquée en laiton nickelé et utilise un joint torique pour assurer l'étanchéité avec la valve.*
- □ *Le raccord de tuyau s'adapte à tous les tuyaux SILCA, anciens et nouveaux. S'adapte aux valves Schrader et à tous les chucks SILCA avec un filetage extérieur Schrader (tête de pompe 17-4 Presta et adaptateur CP1 Disc).*

Art.-Nr. | Réf.	Bezeichnung | Description

DISC WHEEL ADAPTER

AM-PU-CHU-ASY-001 **Disc Wheel Adapter**
Pumpadapter für Scheibenrad
Adaptateur pour roues à disque
Aluminium, Presta

- Nur für Presta-Ventile, komplett aus Metall
- *Seulement pour des valves Presta, complètement en alliage*

EOLO IV CO2

AM-AC-037-ASY-0100 **Eolo IV CO2**
Pumpaufsatz | *Adapteur de pompe*

- Die einfache Lösung zum Aufpumpen am Straßenrand. Fädeln Sie die Kartusche ein, drücken Sie auf das Ventil und schon ist Luft in Ihrem Reifen. Unkomplizierter Ansatz, auf den Sie sich verlassen können, um im Notfall nach Hause zu kommen
- Ganzmetallkonstruktion, enthält keine Kunststoffteile
- Komplett aus Aluminium der Serie 6063 und rostfreiem Stahl gefertigt
- Knopf zur Regulierung der Durchflussmenge
- Gehärteter Werkzeugstahl-Punktionsstift sorgt für reibungslosen Betrieb unter allen Bedingungen über viele Jahre hinweg
- Kartusche Typ: Mit Gewinde; Enthaltene Patrone: Nein; Farbe: Schwarz/Rot
- *La solution simple pour le gonflage en bord de route. Enfilez la cartouche, appuyez-la sur la valve, et votre pneu est gonflé. Une approche simple sur laquelle vous pouvez compter pour vous ramener chez vous en cas de besoin.*
- *Construction entièrement métallique, ne contient aucune pièce en plastique*
- *Fabriqué entièrement en aluminium de la série 6063 et en acier inoxydable.*
- *Le bouton règle le débit*
- *La tige de perforation en acier à outils trempé assure un fonctionnement en douceur dans toutes les conditions pendant de nombreuses années.*
- *Type de cartouche : Filetage, Cartouche incluse : Non; Couleur : Noir/Rouge*

ERSATZTEILE | PIÈCE DE RECHANGE

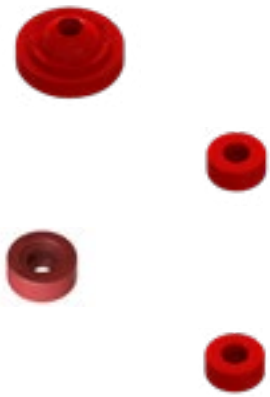

AM-PU-GAS-COM-242 **Elastomer Seal Presta Chuck #242**
Elastomerdichtung #242 für SuperPista Ultimate Presta-Pumpkopf | *Élastomère #242 pour adaptateur Presta SuperPista Ultimate*

AM-PU-GAS-COM-252 **Elastomer Seal Disc Chunk #252**
Elastomerdichtung #252 für Pumpaufsatz «Hiro» | *Élastomère #252 pour adaptateur «Hiro»*

AM-PU-GAS-COM-323 **Elastomer Seal Imperio Head #323**
Elastomerdichtung #323 für Silca-Impero-Pumpkopf | *Élastomère #323 pour tête de pompe Silca Impero*

AM-PU-GAS-COM-254 **Elastomer Seal Imperio Hiro Chuck v.2 #254**
Elastomerdichtung #254 für Silca-Impero-Pumpkopf | *Élastomère #254 pour tête de pompe Silca Impero*

Art.- Nr. | Réf.	Bezeichnung | Description

BAGS

SEAT ROLL ASYMMETRICO

AM-BG-014-ASY-0100 **Seat Roll Asymmetrico**

- ■ Eine elegante und kompakte Satteltasche, in der Sie alles verstauen können, was Sie für Pannenreparaturen oder leichte mechanische Arbeiten a benötigen
- ■ Entfaltbare Werkzeugtasche mit Fächern für die Organisation der Werkzeuge
- ■ BOA®-Verschlussstystem
- ■ Gewachstes Gewebe mit reflektierenden Nähten
- □ *Une sacoche élégante et compacte dans laquelle vous pouvez ranger tout ce dont vous avez besoin pour réparer une crevaison ou effectuer des travaux de mécanique légère a*
- □ *Sac à outils dépliable avec des compartiments pour l'organisation des outils*
- □ *Système de fermeture BOA®*
- □ *Tissu ciré avec coutures réfléchissantes*

SEAT CAPSULE PREMIO

AM-BG-007-ASY-0100 **Seat Capsule Premio**
Black

- ■ Eine schlanke, mittelgrosse Satteltasche – die feste, thermogeformte Schale schafft eine modulare Struktur mit zwei internen Trennwänden
- ■ Wird mit einem BOA®-Verschlusssystem am Fahrrad befestigt und verfügt über Rail Guard für hervorragenden Halt und Schutz des Sattelgestells
- ■ YKK Reissverschluss, der das untere Drittel der Tasche halbiert
- ■ Bietet Platz für einen zwei 700x30 mm Schläuche und in den Innentaschen lassen sich bequem ein Satz Reifenheber, ein Multitool, ein CO_2-Regulator und bis zu drei CO_2-Patronen unterbringen
- □ *Une sacoche de selle fine et de taille moyenne – la coque rigide et thermoformée crée une structure modulaire avec deux séparations internes*
- □ *Se fixe au vélo grâce à un système de fermeture BOA® et dispose d'un Rail Guard pour un excellent soutien et une protection du rail de la selle*
- □ *Fermeture éclair YKK qui coupe en deux le tiers inférieur du sac*
- □ *Offre de l'espace pour deux chambres à air de 700x30 mm et les poches internes peuvent facilement accueillir un jeu de démonte-pneus, un outil multifonction, un régulateur de CO_2 et jusqu'à trois cartouches de CO_2*

MATTONE SEAT PACK

AM-BG-013-ASY-0100 **Mattone Seat Pack**

- ■ Wasserfeste, ultrakompakte Sitztasche, die mit dem BOA® Verschlusssystem an den Schienen besfestigt wird
- ■ Einzigartiges Reissverschlussdesign ermöglicht den Zugriff, während man auf dem Fahrad sitzt
- ■ Seperates Fach für Ausweis, Kreditkarte oder Geld
- ■ Dimensionen: 13cm x 8,5cm x 5,5cm
- □ *Sac de siège imperméable et ultra-compact qui se fixe aux rails grâce au système de fermeture BOA®*
- □ *La conception unique de la fermeture éclair permet l'accès à vélo*
- □ *Pochette séparée pour carte d'identité, carte de crédit ou argent*
- □ *Dimensions: 13cm x 8,5cm x 5,5cm, Volume: environ 0,61 litre*

Art.-Nr. | Réf.	Bezeichnung | Description

TOOLS

T-RATCHET & TI-TORQUE KIT

AM-TL-RAT-TRQ-001 **T-Ratchet + Ti-Torque Kit**
Black, 120 mm x 70 mm x 30 mm, 220 g

- ■ Das kleinste und leichteste tragbare Multitool mit Live-Drehmomentmessung von 2-8Nm.
- ■ Ergonomisches Werkzeug mit einem Drehmomentmessbalken, der ein Echtzeit-Feedback liefert, während Sie die Schraube anziehen
- ■ T-Ratsche mit austauschbaren magnetischen Komponenten – Schraubenzieher und Rätsche in einem
- ■ Gefertigt aus Titan und Aluminium; Kontakflächen aus Hartstahl
- □ *Le multitool portable le plus petit et le plus léger avec mesure en direct du couple de 2 à 8 Nm*
- □ *Outil ergonomique doté d'une barre de mesure du couple qui fournit un retour d'information en temps réel lorsque vous serrez le boulon*
- □ *Clé à cliquet en T avec composants magnétiques interchangeables – tournevis et clé à cliquet en un seul outil*
- □ *Fabriqué en titane et aluminium; surfaces de contact en acier à haute teneur en carbone*

HX-ONE HOME & TRAVEL ESSENTIAL KIT

AM-TL-HEX-ASY-001 **HX-One Home And Travel Essential Kit**

Hex 2/2,5/¾/5/6/8/10 mm, Phillips ½, Flat 5/1, Torx 8/10/15/20/25/30, Bit Head

- ■ Ein kompletter Satz von Präzisions-Sechskantschlüsseln und Bit-Treibern
- ■ Profi-Level Innensechskant-Schlüsselset
- ■ Vollständig CNC-gefräste Buchenholzbox mit Magnetverschluss
- ■ Bester S2-Werkzeugstahl, Chrombeschichtung, Polymergriffe für bessere Griffigkeit
- □ *Un jeu complet de clés hexagonales et de tournevis de précision*
- □ *Jeu de clés hexagonales de niveau professionnel*
- □ *Boîte en bois de hêtre entièrement usinée par CNC avec fermeture magnétique*
- □ *Meilleur acier à outils S2, revêtement chromé, poignées en polymère pour une meilleure prise en main*

SICURO TITANIUM BOTTLE CAGE BLACK CERAKOTE EDITION

AM-HY-002-ASY-0601 **Sicuro Titanium Bottle Cage Black Cerakote Edition**

- ■ Ultimativer, stylischer Flaschenhalter mit spezieller Haptik
- ■ Die röhrenförmige Titankonstruktion mit der Hochleistungskeramikbeschichtung Cerakote hält die Biddons bei Fahrten auf holprigen Untergründen besonders fest, insbesondere bei der Montage an der Unterseite des Unterrohrs.
- ■ Extreme Abriebfestigkeit und Korrosionsbeständigkeit.
- ■ Cerakote verbessert sogar die Ermüdungsbeständigkeit, indem es die Möglichkeit von Oberflächenkratzern oder -kerben ausschließt, die im Laufe der Zeit zu Spannungsrissen führen können.
- □ *Porte-bidons ultime et stylé avec un toucher spécial.*
- □ *La construction tubulaire en titane avec le revêtement céramique haute performance Cerakote maintient les bidons particulièrement bien en place lors de la conduite sur des surfaces cahoteuses, en particulier lorsqu'ils sont montés sur le dessous du tube diagonal.*
- □ *Résistance extrême à l'abrasion et à la corrosion.*
- □ *Cerakote améliore même la résistance à la fatigue en éliminant la possibilité d'éraflures ou d'en-tailles superficielles qui, avec le temps, peuvent entraîner des fissures de tension.*

Art.- Nr. | Réf.	Bezeichnung | Description

SICURO TITANIUM BOTTLE CAGE

AM-HY-002-ASY-0600 **Sicuro Titanium Bottle Cage**
Titanium, 30 g

- ■ Handgefertigter, wunderschöner Bottle Cage aus Titan – perfekt für Vintage Racer und/oder Gravel Bikes,
- ■ Einzigartige Befestigungsösen, die eine Verstellbarkeit nach vorne und hinten am Fahrrad ermöglichen
- ■ Nahtlose 3-2.5 Titan-Rohre
- ■ Erweiterte Verstellmöglichkeit – bis zu 21 mm vorne/hinten
- □ *Magnifique porte-bouteilles en titane fabriqué à la main – parfait pour les vélos de course vintage et/ou les vélos de gravier*
- □ *Des œillets de fixation uniques qui permettent un ajustement à l'avant et à l'arrière du vélo*
- □ *Tubes sans soudure en titane 3-2.5*
- □ *Réglages étendus – jusqu'à 21 mm à l'avant/arrière*

ARMY KNIFE NOVE

AM-TL-MIT-ASY-001 **Italian Army Knife - Nove**
85 g

- ■ Ultraschnelles, zuverlässiges Pannenhilfe-Tool – alles Notwendige, kein Schnickschnack, Aluminium-Seitenbügel mit Masterlink-Aufnahme, 9 geschmiedete, beschichtete Werkzeuge, Sechskant (2, 3, 4, 5, 6, 8 mm), T25, Phillips #2, 8-mm-Adapter kombinierbar mit 5-mm-Adapter, Edelstahl-Drehpunkt-Hardware
- □ *outil de dépannage ultra-rapide et fiable – tout le nécessaire, sans fioritures, étrier latéral en aluminium avec support Masterlink, 9 outils forgés et revêtus, hexagonaux (2, 3, 4, 5, 6, 8 mm), T25, Phillips #2, adaptateur 8 mm combinable avec adaptateur 5 mm, matériel de pivot en acier inoxydable*

ARMY KNIFE TREDICI

AM-TL-MIT-ASY-002 **Italian Army Knife – Tredici**
105 g

- ■ Kompaktes Multitool mit Aluminiumseiten und integrierter Masterlink-Aufbewahrung, Sechskant (2, 2,5, 3, 4, 5, 6, 8 mm), Torx® (T10, T20, T25), PH2, PH Flat, Scheibenbremsspreizer, 8-mm-Kappe kombinierbar mit 5 mm
- □ *outil multifonctions compact avec côtés en aluminium et rangement Masterlink intégré, hexagone (2, 2,5, 3, 4, 5, 6, 8 mm), Torx® (T10 / T20 / T25), PH2, PH Flat, écarteur de frein à disque, capuchon 8 mm combinable avec 5 mm*

ARMY KNIFE VENTI

AM-TL-004-ASY-0100 **Italian Army Knife – Venti**
Black/Silver, 160 g, 80x46x14 mm

- ■ Leichtes, voll funktionsfähiges Multitool in mittlerer Länge mit Edelstahlbeschlägen und über 20 Werkzeugen, Geschmiedete, beschichtete Werkzeuge, Sechskant (2, 2,5, 3, 4, 5, 6, 8 mm), Torx® (8, 10, 20, 25), PH2, SL4, 7 mm Ringschlüssel, 8 mm Schlüssel für Bördelmutter, 10 mm Gabelschlüssel und weiteren Werkzeugen
- □ *outil multifonction léger et entièrement fonctionnel, de longueur moyenne, avec ferrures en acier inoxydable et plus de 20 outils, outils forgés et revêtus, hexagonaux (2, 2,5, 3, 4, 5, 6, 8 mm), Torx® (8, 10, 20, 25), PH2, SL4, clé polygonale 7 mm, clé 8 mm pour écrou à sertir, clé à fourche 10 mm et autres outils*

Art.- Nr. | Réf.	Bezeichnung | Description

HIROBEL FRAME CLAMP

AM-AC-004-ASY-0100 **Hirobel Frame Clamp**
Black/Grey

- Hirobel Frame Clamp ist eine speziell entwickelte Klemme für Fahrrad-Reparaturständer, die das Arbeiten am Fahrrad erleichtert
- Spannungen und Lasten werden besser über den Fahrradrahmen verteilt und bietet eine höhere Stabilität während Beschädigungen vermieden werden
- Bei Hirobel umschliessen speziell geformte, lackfreundliche Kegel und Bindungen den Rahmen an den Rohrkreuzungen, wo die Wanddicken höher sind und die Kräfte auf wesentlich grössere Flächen verteilt werden können
- Einstellbar und anpassbar für jedes mögliche Rahmendesign, ermöglicht der Hirobel auch, die Klemme des Reparaturständers näher am Schwerpunkt des Fahrrads zu platzieren, was die Stabilität verbessert und ein Aufschaukeln des Fahrrads bei schwereren Arbeiten verhindert, während gleichzeitig der Antriebsstrang für den Mechaniker konsequent höher platziert wird, was die Sicht verbessert und den Rücken entlastet.

- *La pince pour cadre Hirobel est une pince spécialement conçue pour les stands de réparation de vélos qui facilite le travail sur le vélo*
- *Les contraintes et les charges sont mieux réparties sur le cadre du vélo et assurent une plus grande stabilité tout en évitant les dommages*
- *Avec Hirobel, des cônes et des fixations de forme spéciale, adaptés à la peinture, entourent le cadre aux intersections des tubes, où l'épaisseur des parois est plus importante et où les forces peuvent être réparties sur des surfaces beaucoup plus grandes*
- *Réglable et personnalisable pour tous les types de cadres possibles, le Hirobel permet également de placer la pince du support de réparation plus près du centre de gravité de la moto, ce qui améliore la stabilité et empêche la moto de basculer lors de travaux plus lourds, tout en plaçant systématiquement la transmission plus haut pour le mécanicien, ce qui améliore la visibilité et réduit les tensions dorsales.*

Art.- Nr. | Réf.	Bezeichnung | Description

3D WERKZEUGE

TIRE LEVERS PREMIO

AM-AC-LVR-ASY-001 **Tire Levers Premio**
Premio Reifenheber

- ■ Geschmiedete Legierungsklinge
- ■ Verstärkte Nylon-Felgenabdeckung, sicher für die Verwendung auf Carbonfelgen
- ■ Integrierter Speichenhakenflügel
- ■ 105mm x 25mm x 7mm (Perfekt für Seat Roll Premio oder Capsule Premio)
- ■ Nettogewicht (Zwei Hebel und Neoprenhülle) = 36 Gramm
- □ *Lame en alliage forgé*
- □ *Cache-jante en nylon renforcé, sans danger pour une utilisation sur des jantes en carbone*
- □ *Aile de crochet de rayon intégrée*
- □ *105mm x 25mm x 7mm (Parfait pour Seat Roll Premio ou Capsule Premio)*
- □ *Poids net (deux leviers et housse néoprène) = 36 grammes*

LUBRICANTS

BOTTLE OF SYNERGETIC DRIP LUBE

AM-AC-018-ASY-0300 **Silca Synergetic Wet Lube**

Das Synergetic Wet Lube von Silca basiert auf einer Technologie, die ursprünglich in der Formel 1 entwickelt wurde, um die Reibung zu verringern und den Verschleiß aller Metallkomponenten nahezu zu eliminieren. Das ölbasierte Schmiermittel ist ein Tropfschmiermittel, das für den Radfahrer entwickelt wurde, der die geringere Reibung, die längere Lebensdauer und die Geräuschlosigkeit von Schmiermitteln auf Wachsbasis erleben möchte, ohne den langwierigen und komplizierten Entfettungs- und Anwendungsprozess, der mit ihnen verbunden ist.

- ■ 2oz Squeeze-Flasche mit 18ga. Luer-Lock-Präzisionsapplikator-Spitze
- ■ Angeblich 10.000 Meilen Schmiermittel pro Flasche
- ■ Extrem verschleißfest, leise und wasserdicht
- ■ Für beste Ergebnisse auf eine saubere/trockene Kette auftragen
- ■ Hergestellt in den USA

Le lubrifiant humide Synergetic de Silca est basé sur une technologie développée à l'origine dans les courses de F1, pour réduire les frottements et pratiquement éliminer l'usure de tous les composants métalliques. Le lubrifiant à base d'huile est un lubrifiant qui s'applique goutte à goutte, conçu pour les cyclistes qui souhaitent bénéficier de la friction réduite, de la durée de vie accrue et du silence des lubrifiants à base de cire, sans avoir à subir le long processus compliqué de dégraissage et d'application qu'ils impliquent.

- □ *Flacon compressible de 2 oz avec embout applicateur de précision Luer-lock de calibre 18.*
- □ *Prétendument 10 000 miles de lubrifiant par bouteille.*
- □ *Ultra résistant, silencieux et imperméable*
- □ *Pour de meilleurs résultats, appliquer sur une chaîne propre et sèche.*
- □ *Fabriqué aux USA*

Art.-Nr. | Réf.	Bezeichnung | Description

BOTTLE OF SYNERG E-BIKE DRIP LUBE

AM-AC-035-ASY-0100 **Super Secret Chain Lube 4 OZ / 120 ml**

- ■ E-Bike-Ketten sind dem doppelten Innendruck einer herkömmlichen Kette ausgesetzt. Synerg-E ist ein Derivat des preisgekrönten Synergetic-Schmiermittels von Silca mit einer Viskosität, die für die Anforderungen von E-Bikes optimiert ist.
- ■ Das erste und einzige Nassschmiermittel, das im Labortest „Zero Friction Cycling" eine Verschleißblockierung von 0,0 % aufwies.
- ■ zum Patent angemeldete Wolfram-Tribofilm-Technologie, gemischt mit einem Schmiermittel mit höherer Viskosität, optimiert für das hohe Drehmoment in E-Bike-Antriebssträngen
- ■ Verwendet nur die besten, umweltfreundlichen, rein synthetischen Grundöle mit Additiven, die von der EPA und BLM als sicher anerkannt wurden.
- ■ Enthält KEINE PFAS oder andere fluorierte Chemikalien
- ■ Bis zu 10.000 Meilen pro Flasche
- ■ Ultrahoher Tragekomfort
- ■ Ultraleise
- ■ Kettenschmiermittel für alle Bedingungen
- ■ Entwickelt für E-Bikes
- ■ Verkaufseinheit: 2ºz Flasche
- □ *Les chaînes de vélos électriques sont soumises à une pression interne deux fois supérieure à celle des chaînes traditionnelles. Synerg-E est un dérivé du lubrifiant primé Synergetic de Silca, avec une viscosité optimisée pour les exigences des vélos électriques.*
- □ *C'est le premier et le seul lubrifiant humide qui a montré un blocage de l'usure de 0,0 % lors du test de laboratoire « Zero Friction Cycling ».*
- □ *Technologie de tribofilm de tungstène en instance de brevet, mélangée à un lubrifiant de viscosité plus élevée, optimisée pour le couple élevé dans les chaînes cinématiques des vélos électriques.*
- □ *N'utilise que les meilleures huiles de base écologiques, purement synthétiques, avec des additifs reconnus comme sûrs par l'EPA et le BLM.*
- □ *Ne contient PAS de PFAS ou d'autres produits chimiques fluorés.*
- □ *Jusqu'à 10.000 miles par bouteille*
- □ *Ultra-confortable à porter*
- □ *Ultra silencieux*
- □ *Lubrifiant de chaîne pour toutes les conditions*
- □ *Conçu pour les vélos électriques*
- □ *Unité de vente : bouteille de 2ºz*

SUPER SECRET CHAIN LUBE

AM-AC-018-ASY-0100 **Super Secret Chain Lube 2 OZ / 60 ml**

AM-AC-015-ASY-0600 **Super Secret Chain Lube 4 OZ / 120 ml**

AM-AC-015-ASY-0700 **Super Secret Chain Lube 8 OZ / 236 ml**

- ■ SILCA Super Secret Chain Lube bringt all die Supergeschwindigkeit und die Laufruhe einer mit Heisschmelz-Wachs getränkten Kette auf ein tropfend aufgetragenes Wachs
- ■ Die Kette sollte vor der Anwendung sehr sauber und trocken sein
- ■ Für ein optimales Ergebnis mind. 12 Stunden trocknen lassen, bei kühler oder feuchter Witterung 24 Stunden
- ■ Empfehlung: Schmiermittel nach jeder Fahrt auftragen, damit es für das nächste Mal bereit ist.
- □ *SILCA Super Secret Chain Lube apporte toute la vitesse et la douceur d'une chaîne trempée dans une cire thermofusible à une cire appliquée au goutte à goutte*
- □ *La chaîne doit être très propre et sèche avant l'application*
- □ *Pour de meilleurs résultats, laissez sécher pendant au moins 12 heures, ou 24 heures par temps frais ou humide*
- □ *Recommandation : appliquer le lubrifiant après chaque course afin qu'il soit prêt pour la prochaine fois.*

Art.- Nr. | Réf.	Bezeichnung | Description

CHAIN WAXING SYSTEM

AM-AC-057-ASY-0200 **Chain Waxing System**

- Mit dem SILCA Chain Waxing System bringen Sie Ihr Kettenwachsen auf die nächste Stufe. Ein 600ml-Wachswärmer, ein Tropfständer und eine Kabelkupplung nehmen weniger Platz ein und führen alle Wachstropfen zurück in den Topf, um eine Wachsverschwendung zu vermeiden.
- Beschreibung: Das Ultimate Chain Waxing System ist Ihr kompaktes Kit für zu Hause, mit dem Sie Ihre Ketten gründlich wachsen können. Der Wachswärmer, der Tropfständer und die Kabelkupplung sind im Lieferumfang enthalten, damit Sie den saubersten, leisesten und effizientesten Antriebsstrang haben, der möglich ist.
- Der Wachsschmelzer hat einen belüfteten, durchsichtigen Deckel, um die Wärme zu speichern und gleichzeitig zu überprüfen, ob das Wachs vollständig geschmolzen ist. Die perfekte Ergänzung zu StripChip, um Ihre Kette in einem einzigen Schritt ohne Entfettungsmittel zu wachsen.
- Der Ständer zum Aufhängen der Kette sorgt dafür, dass das überschüssige Wachs direkt in den Topf zurücktropft und für die nächste Anwendung verwendet werden kann. Der gekerbte Sockel hält das Schmelzgerät an seinem Platz und hält die Kettenkupplung sicher fest.
- Die Kettenkupplung hat ein Stahlseil, das auf der einen Seite mit einem Gewinde versehen ist, so dass es durch Ihre Kette geschlungen und auf der anderen Seite befestigt werden kann. Tauchen Sie Ihre Kette in das Wachs, bewegen Sie sie und hängen Sie sie auf, ohne dass Wachs an Stellen gelangt, an denen Sie es nicht haben wollen, oder ohne dass Sie einen Topf mit heissem Wachs berühren.
- Spezifikationen: CH-Fixadapter Schuko, Kabel-Koppler, Tropfständer, Elektrischer Wachswärmer, 600ml Wachs-Kapazität, Temperaturbereich: 75-125ºC, 14" x 8,5" x 9", Europäischer Stecker, 220V, HINWEIS: Das System enthält KEIN Wachs

- *Améliorez votre jeu d'épilation à la cire en chaîne avec le système d'épilation à la cire en chaîne SILCA. Un chauffe-cire de 600 ml, un support d'égouttage et un coupleur de câble prennent moins de place et ramènent toutes les gouttes de cire dans le pot pour éviter de gaspiller de la cire.*
- *Description: L'Ultimate Chain Waxing System est votre kit compact à domicile pour l'épilation immersive des chaînes. Le réchauffeur de cire, le support d'égouttage et le coupleur de câble sont inclus pour vous permettre d'avoir la transmission la plus propre, la plus silencieuse et la plus efficace possible.*
- *Le fondoir à cire est doté d'un couvercle transparent ventilé qui permet de conserver la chaleur tout en vérifiant que la cire est entièrement fondue. Compagnon idéal du StripChip pour cirer votre chaîne en une seule étape, sans dégraissant.*
- *Le support de suspension de la chaîne permet une période de séchage sans dégâts où vous pouvez laisser l'excès de cire s'égoutter directement dans le pot pour l'utiliser lors de l'application suivante. La base crantée maintient le fondoir en place et le coupleur de chaîne en toute sécurité.*
- *Le coupleur de chaîne est doté d'un câble en acier fileté d'un côté, ce qui permet de le faire passer dans la chaîne et de le fixer de l'autre côté. Plongez votre chaîne dans la cire, agitez-la et suspendez-la sans mettre de la cire là où vous ne le souhaitez pas ou sans toucher un pot de cire chaude.*
- *Spécifications: CH-Adapteur Schuko, Coupleur de câble, Support de goutte à goutte, Chauffe-cire électrique, Capacité de 600 ml de cire, Plage de température : 75-125ºC, 14" x 8.5" x 9", Prise européenne, 220V, NOTE : Le système n'inclut pas la cire*

Art.- Nr. | Réf.	Bezeichnung | Description

ENDURANCE CHIPS

AM-AC-058-ASY-0200 **Endurance Chips**

Passen Sie Ihre Wachsmischung dauerhaft an die Anforderungen Ihres Fahrstils an. Fahren Sie ein 24-Stunden-Langstreckenrennen? Fügen Sie zwei Endurance-Chips hinzu. 40 km TT? Fügen Sie zwei SpeedChips hinzu. Kombinieren Sie nach Belieben, um den Anforderungen Ihres größten Events gerecht zu werden.

- Modifiziert das Wachs dauerhaft
- 1 EnduranceChip/250 g erhöht die Lebensdauer auf bis zu 550.000
- 2 EnduranceChip/250 g erhöht die Lebensdauer auf bis zu 750.000
- Kompatibel mit StripChip

Adaptez votre mélange de farts en fonction de vos exigences. Vous participez à une course d'endurance de 24 heures ? Ajoutez deux puces d'endurance. Un contre-la-montre de 40 km ? Ajoutez deux puces SpeedChips. Combinez-les pour répondre aux exigences de votre plus grand événement.

- *Modifie la cire de façon permanente*
- *1 EnduranceChip/250 g augmente la longévité jusqu'à 550 000*
- *2 EnduranceChip/250 g augmentent la longévité jusqu'à 750 000*
- *Compatible avec StripChip*

SPEED CHIPS

AM-AC-058-ASY-0300 **Speed Chips**

SpeedChip ist die erste Wahl, wenn Sie die absolut schnellste verfügbare Option benötigen. Es ist die Wahl von Visma Lease-a-Bike für Zeitfahren und Eintagesklassiker. SpeedChip ist ein vollsynthetisches Wachs, das aus den gleichen exotischen Grundölen hergestellt wird, die auch in SILCA Synergetic verwendet werden. Dies ist das absolut schnellste Wachs, das jemals in einem Fahrradschmiermittel verwendet wurde

- Modifiziert das Wachs dauerhaft
- 1 SpeedChip/250 g verbessert die Effizienz um 0,4 %
- 2 SpeedChip/250 g verbessern die Effizienz um 0,6 %
- Kompatibel mit StripChip

SpeedChip est la solution idéale pour ceux qui recherchent la vitesse absolue. C'est le choix de Visma Lease-a-Bike pour les contre-la-montre et les classiques d'un jour. SpeedChip est un fart entièrement synthétique produit à partir des mêmes huiles de base exotiques que celles utilisées dans SILCA Synergetic. C'est le fart le plus rapide jamais utilisé dans un lubrifiant cycliste, mélangé à trois tailles de plaquettes de bisulfure de tungstène submicroniques et nanométriques pour une réduction accrue des frottements et des propriétés anti-usure

- *Modifie la cire de façon permanente*
- *1 SpeedChip/250 g améliore l'efficacité de 0,4 %*
- *2 SpeedChip/250 g améliorent l'efficacité de 0,6 %*
- *Compatible avec StripChi*

Art.- Nr. | Réf.	Bezeichnung | Description

STRIP CHIP BAR PACKAGE STRIP CHIP HOT MELT

AM-AC-058-ASY-0100 **Strip Chip Bar Package**

- Beschreibung: Keine Entfettungsvorbereitung mehr: Mit StripChip entfällt das Entfetten neuer Werksketten. StripChip wird direkt in das heisse Wachs eingebracht und ermöglicht eine einfache Vorbereitung der Kette.
- Fortschrittliche Technologie: Jedes StripChip-Entfettungsadditiv verbindet sich mit dem in neuen Ketten enthaltenen Fett und verwandelt es in Wachs. Die fortschrittliche Technologie von SILCA spart Zeit und Kosten und sorgt für einen sauberen, leisen und äusserst effizienten Antriebsstrang.
- Bequeme Form: StripChip wird in Form eines Schokoriegels verkauft, wobei jeder Riegel sechs Stück (je 12 Gramm) enthält. Durch die Verwendung eines Stücks pro Kette wird das werksseitige Fett entfernt, so dass das Heisswachs in das Innere der Kettenbolzen und -rollen eindringen kann.
- Einfache Anwendung: Nahtlos integriert mit dem SILCA Super Secret Chain Blend Hot Melt Wax, gewährleistet StripChip einen unkomplizierten Anwendungsprozess. Befolgen Sie die einfachen Schritte für optimale Ergebnisse, so dass die Wartung der Kette einfach und mühelos wird.
- Optimierte Leistung: StripChip funktioniert am besten mit SILCA Super Secret Chain Blend Hot Melt Wax. So wird der schnellste und langlebigste Antriebsstrang gewährleistet. Erleben Sie verbesserte Leistung, reduzierte Reibung und minimierten Verschleiss bei jeder Fahrt.
- Spezifikationen: Formel auf Basis von Oleogelierwachs, Macht scharfe Entfettungsmittel überflüssig, Verwenden Sie einen Chip pro neuer Kette mit Werksfett, Verwandelt das Schmierfett in eine wachsähnliche Substanz, Kein Leistungsabfall, Von der verpackten Werkskette zur gewachsten Kette in 10 Minuten

- *Description: Plus de préparation au dégraissage: StripChip élimine le besoin de dégraisser les nouvelles chaînes d'usine. Avec le StripChip, c'est directement dans la cire chaude pour une préparation simple de la chaîne.*
- *Technologie avancée: Chaque additif de dégraissage StripChip se lie à la graisse d'usine contenue dans les chaînes neuves et la transforme en cire. La technologie avancée de SILCA permet d'économiser du temps et de l'argent tout en garantissant une transmission propre, silencieuse et ultra-efficace.*
- *Forme pratique: StripChip est vendu sous la forme d'une barre chocolatée, chaque barre contenant six pièces (12 grammes chacune). L'utilisation d'un morceau par chaîne élimine efficacement la graisse d'usine, permettant à la cire thermofusible de pénétrer à l'intérieur des axes et des rouleaux de la chaîne.*
- *Application simple: S'intègre parfaitement à la chaîne SILCA Super Secret Chain Blend Hot Melt Wax, le StripChip garantit un processus d'application simple. Il suffit de suivre des étapes simples pour obtenir des résultats optimaux, ce qui rend l'entretien de la chaîne simple et sans tracas.*
- *Performance optimisée: StripChip fonctionne mieux avec la cire thermofusible SILCA Super Secret Chain Blend, garantissant la transmission la plus rapide et la plus durable. Profitez d'une performance accrue, d'une friction réduite et d'une usure minimale à chaque sortie.*
- *Spécifications: Formule à base de cire d'oléogélation, Élimine le besoin de dégraissants agressifs, Utiliser une puce par chaîne neuve avec la graisse d'origine, Transforme la graisse en une substance semblable à de la cire, Pas de baisse de performance, Passer d'une chaîne dans son emballage d'origine à une chaîne cirée en 10 minutes*

Art.- Nr. | Réf.	Bezeichnung | Description

SUPER SECRET CHAIN BLEND (HOT WAX)

AM-AC-016-ASY-0100 **Super Secret Chain Blend (Hot Wax) 500g**

- SILCA Secret Chain Blend (Hot Wax) bringt die ganze Supergeschwindigkeit und Geräuschlosigkeit der SILCA Super Secret Chain Lube in einer mit Heissschmelzwachs getränkten Kette
- Secret Chain Blend verwendet auch das weltweit schnellste und schmierigste Additiv, das Wolfram-di-Sulfid im Nanobereich. NanoPlatelet WS2 hat weniger als 1/3 des dynamischen Reibungskoeffizienten von PTFE und ¼ des von Molybdändisulfid (MoS2)
- Anwendung: Kette in Beutel legen und diesen in heisses Wasser tauchen
- Die Kette sollte vor dem Auftragen sehr sauber und trocken sein
- Für die ganzjährige Wartung der Kette runden Sie die Kette mit einer Flasche Super Secret Chain Lube ab

- *SILCA Secret Chain Blend (Hot Wax) apporte toute la vitesse et la tranquillité de SILCA Super Secret Chain Lube dans une chaîne trempée dans la cire chaude*
- *Secret Chain Blend utilise également l'additif le plus rapide et le plus gras au monde, le di-sulfure de tungstène à l'échelle nanométrique. Le NanoPlatelet WS2 a un coefficient de frottement dynamique inférieur à 1/3 de celui du PTFE et à ¼ de celui du disulfure de molybdène (MoS2)*
- *Application: Placez la chaîne dans le sac et immergez-la dans l'eau chaude*
- *La chaîne doit être très propre et sèche avant l'application*
- *Pour l'entretien de la chaîne tout au long de l'année, faites le tour de la chaîne avec une bouteille de Super Secret Chain Lube*

Art.- Nr. | Réf.	Bezeichnung | Description

ULTIMATE CHAIN STRIPPER 4OZ + SUPERSECRET 4OZ

AM-AC-050-ASY-0200	**Ultimate Chain Stripper 4OZ + Supersecret 4OZ**
AM-AC-050-ASY-0100	**Ultimate Chain Stripper 473 ml / 16OZ**

- SILCA Ultimate Chain Stripper and Wax Prep ist ein hochkonzentrierter, biologisch abbaubarer Entfetter in Kombination mit einem Wachshaftungsförderer (Primer), der eine schnelle, einstufige Vorbereitung von Werksketten für die Wachsbehandlung ermöglicht und gleichzeitig die Wachshaftung und die Langlebigkeit der Ketten verbessert. SILCA Chain Stripper reduziert den Zeitaufwand auf weniger als 10 Minuten sowie die Anzahl der Chemikalien, die für die ordnungsgemässe Behandlung einer werkseitig gefetteten Kette benötigt werden. Das Ergebnis ist der erste wachsoptimierte Kettenreiniger der Welt, der nicht nur Fette und Öle entfernt, sondern die Metalloberfläche für eine bessere Haftung von Schmiermitteln auf Wachsbasis vorbereitet.
- Er kann sogar an einer auf dem Fahrrad montierten Kette verwendet werden, um Ketten für das Auftragen von Tropfwachs vorzubereiten. Die aggressive 'lift and encapsulate' Formel von SILCA's Ultimate Chain Stripper and Wax Prep ermöglicht zudem die einfache Reinigungsanwendungen für Heissschmelzwachs.
- Bei der Entwicklung der SILCA Ultimate Chain Stripper and Wax Prep Formel haben wir am Ende des Prozesses begonnen und rückwärts gearbeitet. Wir identifizierten Chemikalien, die Fette und Öle lösen, während die Wachshaftung auf Metall gefördert wird.
- Und das haben wir entdeckt: ein organischer Reiniger, der Fette und Öle anhebt und einkapselt, so dass sie leicht von der Metalloberfläche abgespült werden können.
- Statistische Informationen: Biologisch abbaubare / umweltfreundliche Formel, Reinigt die Kette in 10 Minuten, Verbessert die Haftung der Wachsbehandlung, Zwei Größen: 16 oz und 4 oz (nur im Bundle), Hergestellt in den USA

- *SILCA Ultimate Chain Stripper and Wax Prep est un dégraissant biodégradable hautement concentré combiné à un promoteur d'adhérence de la cire (primer) qui permet de préparer rapidement et en une seule étape les chaînes d'usine pour le traitement à la cire tout en améliorant l'adhérence de la cire et la longévité des chaînes. SILCA Chain Stripper réduit le temps nécessaire à moins de 10 minutes ainsi que le nombre de produits chimiques nécessaires pour traiter correctement une chaîne graissée en usine. Le résultat est le premier nettoyant de chaîne au monde optimisé pour la cire, qui non seulement élimine les graisses et les huiles, mais prépare aussi la surface métallique pour une meilleure adhérence des lubrifiants à base de cire.*
- *Il peut même être utilisé sur une chaîne montée sur un vélo pour préparer les chaînes à l'application de cire goutte à goutte. La formule agressive 'lift and encapsulate' de l'Ultimate Chain Stripper and Wax Prep de SILCA permet en outre des applications de nettoyage faciles pour la cire thermofusible.*
- *Lors du développement de la formule SILCA Ultimate Chain Stripper and Wax Prep, nous avons commencé à la fin du processus et travaillé à l'envers. Nous avons identifié des produits chimiques qui dissolvent les graisses et les huiles tout en favorisant l'adhérence de la cire sur le métal.*
- *Et c'est ce que nous avons découvert :un nettoyant organique qui soulève et encapsule les graisses et les huiles afin qu'elles puissent être facilement éliminées de la surface du métal par rinçage.*
- *Informations statistiques : Formule biodégradable / respectueuse de l'environnement, Nettoie la chaîne en 10 minutes, Améliore l'adhérence du traitement à la cire, Deux tailles : 16 oz et 4 oz (en bundle uniquement), Fabriqué aux États-Unis*

Art.- Nr. | Réf.	Bezeichnung | Description

LITER ULTIMATE SEALANT

AM-AC-059-ASY-0100	**Ultimate Sealant**
AM-AC-059-ASY-0101	**500ml Liter Ultimate Sealant**
AM-AC-059-ASY-0300	**65ml Ultimate Sealant (12 pack only)**

Das perfekte Dichtmittel für alle, die die ultimative Dichtkraft, Langlebigkeit und einfache Handhabung suchen. Kann durch das Ventil injiziert werden, dichtet Löcher von mehr als 6 mm ab und hält bis zu 6 Monate.

- Dichtet Einstiche von 6mm+ ab
- Durch das Ventil injizierbar
- Hält 6+ Monate
- Firmeneigene Mischung aus natürlichem und synthetischem Latex
- Optimierte Kohlefaserstränge
- Erhältlich in 1 L, 500 ml und 65 ml

Le produit d'étanchéité idéal pour ceux qui recherchent une étanchéité optimale, une longue durée de vie et une grande facilité d'utilisation. Injectable par la valve, il obture une perforation de 6 mm et plus et dure jusqu'à 6 mois

- *Scelle les perforations de 6 mm et plus*
- *Injectable par la valve*
- *Dure plus de 6 mois*
- *Mélange exclusif de latex naturel et synthétique*
- *Brins de fibre de carbone optimisés*
- *Agents moussants avancés pour transporter les brins de carbone vers une perforation*
- *Disponible en 1 L, 500 ml et 65 ml*

INJECTABLE SYRINGE

AM-AC-059-ASY-0200	**Injectable Syringe**

Die Montage von schlauchlosen Reifen wird zum Kinderspiel. Setzen Sie Ihren Reifen sauber ein und spritzen Sie anschließend SILCA Ultimate Tubeless Sealant durch das Ventil. So ist die Montage ohne Probleme erledigt. Mit dem SILCA Ultimate Sealant Injector können Sie Dichtmittel einfach und sauber durch Ihre Ventile spritzen. Jetzt kompatibel mit SILCA Ultimate Sealant.

- 2 oz Fassungsvermögen
- Kompatibel mit Ultimate Tubeless Sealant

Simplifiez l'installation de vos pneus tubeless. Installez votre pneu sans problème et injectez le produit d'étanchéité SILCA Ultimate Tubeless Sealant par la valve pour une installation tubeless impeccable. Injectez du mastic dans vos valves facilement et proprement grâce à l'injecteur de mastic SILCA Ultimate. Désormais compatible avec le mastic SILCA Ultimate.

- *Capacité de 2 oz*
- *Compatible avec Ultimate Tubeless Sealant*

SEALANT REMOVER

AM-AC-046-ASY-0100	**Sealant Remover (16 oz) 24.00**

Entfernen Sie Versiegelungsrückstände auf Ihrer Lieblingsausrüstung oder Ihren Böden, indem Sie sie einfach einsprühen und abbürsten. Wirkt am besten innerhalb von zwei Stunden.

- Wasserbasiert
- Biologisch abbaubar

Éliminez les résidus de mastic sur votre équipement, vos vêtements ou vos sols préférés en vaporisant et en brossant. L'efficacité est optimale dans les deux heures.

- *À base d'eau*
- *Biodégradable*

Art.- Nr. | Réf.	Bezeichnung | Description
GEAR WIPES BULK 110	
AM-AC-005-COM-0110	**Gear Wipes Bulk 110**

- SILCA Gear Wipes sind zweiseitige Einweghandtücher, die dazu dienen, Schmutz, Fett, Öle und Schweiß von Ihrer Radsportausrüstung zu entfernen. Jedes Wischtuch enthält eine strukturierte Scheuerseite zur Entfernung von starkem Schmutz oder Ruß und eine weiche Polierseite zur Endreinigung, die einen makellosen Glanz hinterlässt. Die Wischtücher verwenden kosmetische Reinigungsmittel, die für die Hände und die Haut sicher sind, aber keine Lotionen oder Feuchtigkeitscremes enthalten, die Streifen oder schleimige Rückstände hinterlassen können.
- Die SILCA Gear Wipes sind für alle, die jede Art von Ausrüstung oder Gebrauchsgütern reinigen und ihre Hände nach der Arbeit an ihrer Ausrüstung reinigen müssen.

- *Les SILCA Gear Wipes sont des serviettes jetables à deux faces conçues pour enlever la saleté, les huiles de graisse et la sueur de votre équipement de cyclisme. Chaque lingette contient un côté frottant texturé pour éliminer les saletés importantes et un côté polissant doux pour le nettoyage de finition qui laisse un brillant impeccable. Les lingettes utilisent des produits de nettoyage de qualité cosmétique qui sont sans danger pour les mains et la peau, mais ne contiennent pas de lotions ou d'agents hydratants qui pourraient laisser des traces ou des résidus visqueux.*
- *Les lingettes SILCA Gear sont destinées à tous ceux qui ont besoin de nettoyer tout type d'équipement ou de biens durables, ainsi que de se nettoyer les mains après avoir travaillé sur leur équipement.*

DEDA CATALOGUE 2026

Celebrating Cycling:
Gravel, Road, MTB, Crono, Pista, Icon

Deda

Sommario contenuti
Table of contents

Sostenibilità in Deda 02
Sustainability at Deda

Deda Cycling Club e Tecnologia RFID 04-07
Deda Cycling Club and RFID Technology

Posizionamento prodotti 09
Products comparison chart

Configuratore per passaggio cavi interni 10
Configurator for internal cables routing

Specifiche della forcella DCR 11
DCR fork specifications

Serie sterzo DCR 12
Headset DCR

Serie sterzo S-DCR 13
S-DCR headset

S-DCR Cover Kit 15
S-DCR Cover Kit

Deda bike fit. Manubri ROAD/GRAVEL 16-19
Deda bike fit. ROAD/GRAVEL Handlebar

Deda bike fit. Attacchi 82°/73° 20
Deda bike fit. Stem 82°/73°

Deda bike fit. Attacchi 82°/70° 21
Deda bike fit. Stem 82°/70°

Cerchi ROAD/GRAVEL 22-23
ROAD/GRAVEL Rims

ROAD → 024
GRAVEL → 134

CRONO → 176

MTB → 164
PISTA → 206
ICON → 214

Serie sterzo 222
Headsets

Nastri manubrio 232
Handlebar tapes

Accessori 238
Accessories

Specifiche tecniche e parti di ricambio 246
Technical chart and spare parts

SUSTAINABILITY PROGRAM

REDUCE
REUSE
RECYCLE

PACKAGING DA FONTI RESPONSABILI
PACKAGING FROM RESPONSIBLE SOURCES

Stiamo aumentando la quantità di packaging realizzato con certificazione FSC e FSC misto. L'obiettivo dell'azienda è di raggiungere il 100% di packaging certificato FSC entro il 2026. Il Forest Stewardship Council (FSC) è un'ONG internazionale senza scopo di lucro. L'FSC ha dato vita ad un sistema di certificazione forestale riconosciuto a livello internazionale. La certificazione ha come scopo la corretta gestione forestale e la tracciabilità dei prodotti derivati. Il logo di FSC garantisce che il prodotto è stato realizzato con materie prime derivanti da foreste correttamente gestite secondo i principi dei due principali standard: gestione forestale e catena di custodia. Scopri di più su fsc.org

We are increasing the amount of mixed FSC and FSC certified packaging. The company's goal is to achieve 100% FSC certified packaging by 2026.
The Forest Stewardship Council (FSC) is an international Non-Profit Organization established in 1993 that promotes responsible management of the world's forests.The FSC has created an internationally recognized forest certification system. The certification has as its purpose the correct forest management and the traceability of derived products. The FSC logo guarantees that the product has been made with raw materials deriving from forests correctly managed according to the principles of the main standards: forest management and chain of custody. Find more at fsc.org

fsc.org

IMPRONTA DI CARBONIO
CARBON FOOTPRINT

Le principali sedi operative del gruppo Dedaindustrie, Deda Elementi e Dedacciai verranno dotate progressivamente di impianti fotovoltaici per un potenza totale installata di 175 kW. Una scelta coerente con la mission dell'azienda che da decenni sviluppa, produce e commercializza prodotti destinati non solo al ciclismo ma più in generale al mondo sportivo. È sempre più evidente come siano necessarie azioni importanti e significative sul fronte ecologico e dell'impatto ambientale associate al futuro dello sviluppo economico di ogni azienda. L'approvvigionamento energetico è infatti un tema di primaria importanza, per questo motivo è stato avviato un progetto che ha visto l'installazione di un impianto fotovoltaico di ultima generazione di 3.000 mq. L'impianto garantirà una produzione annuale di 190.000 kWh in grado di coprire il 65% del proprio fabbisogno. Si stima che in 25 anni l'azienda eviterà l'emissione di 1.151 tonnellate di CO_2.

The headquarters of Dedaindustrie group, Deda Elementi and Dedacciai will soon expand their solar panel initiative by installing more across the factory buildings taking the total production of 175,000 kW per year.
This decision aligns perfectly with the historic mission of the company to develop, manufacture and market products intended not only for cycling but for the sporting industry in general. It is increasingly evident as time goes on that significant and meaningful actions are necessary on an ecological front and on the environmental impact associated with the economic development of the Dedaindustrie group. Energy supply is a topic of high priority and for this reason a project was launched which saw the installation of 3,000 sqm latest generation solar panels. In doing so, the plant will guarantee an annual production of 190.000 kWh capable of covering 65% of its needs. By committing to this plan, it is estimated that in 25 years, the Dedaindustrie group will have cut down emissions of CO_2 by 1,151 tonnes.

RICICLARE
RECYCLING

Stiamo sostituendo progressivamente il packaging in plastica con carta a più basso impatto ecologico.
Inoltre l'utilizzo di plastica sarà limitato all'utilizzo di materiale rigenerato. L'obiettivo dell'azienda è di ridurre del 50% l'utilizzo di plastica entro il 2026 e essere plastic-free nel 2030.

We are progressively replacing plastic packaging with paper with a lower ecological impact.
Furthermore, the use of plastic will be limited to the use of regenerated material.
The company's goal is to reduce plastic use by 50% within 2026 and be plastic-free in 2030.

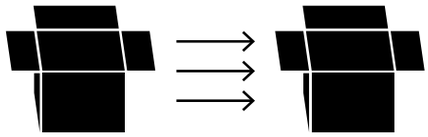

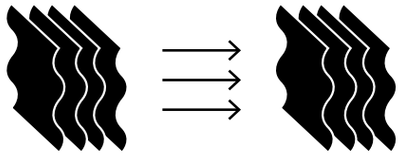

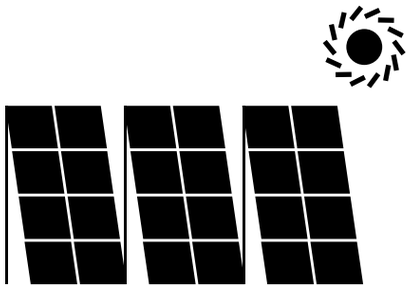

100% FSC

DEDA CYCLING CLUB

IT • Deda Cycling Club è la community riservata ai possessori dei prodotti premium Deda — uno spazio dove performance, innovazione e una passione per il ciclismo si incontrano. All'interno del Club, i membri hanno accesso ad attività esclusive, anteprime, oltre ad fare di un gruppo di appassionati che vivono il ciclismo con la stessa intensità. Che tu stia inseguendo nuovi record personali, esplorando strade inesplorate o semplicemente vivendo il ciclismo a 360°, il Deda Cycling Club è il posto giusto per te.

EN • Deda Cycling Club is a private community reserved exclusively for owners of Deda's premium products — a space where performance, innovation, and an enduring passion for cycling come together. Within this Club, members gain access to exclusive events, early product previews and a network of like-minded enthusiasts who live and breathe the sport. Whether you're chasing personal bests, exploring new roads, or simply celebrating the art of cycling, the Deda Cycling Club is your home for elevating every ride.

VANTAGGI PER I MEMBRI
MEMBER BENEFITS

1

ESTENSIONE DELLA GARANZIA
EXTENDED WARRANTY

IT • Goditi la tranquillità di una garanzia di 4 anni, anziché i 2 anni standard.

EN • Enjoy peace of mind with a 4-year warranty, instead of the standard 2 years.

2

POLIZZA INCIDENTI
CRASH POLICY

IT • Gli imprevisti possono capitare. Ottieni uno sconto del 50% su un prodotto sostitutivo entro i primi 2 anni.

EN • Accidents happen. Get a 50% discount on a replacement within the first 2 years.

3

VERIFICA DELL'AUTENTICITÀ
AUTHENTICITY VERIFICATION

IT • Conferma che il tuo prodotto Deda sia 100% originale.

EN • Confirm your product is 100% original Deda.

4

INIZIATIVE SPECIALI
SPECIAL INITIATIVES

IT • Partecipa ad eventi esclusivi e ottieni i vantaggi riservati alla community.

EN • Take part in exclusive events and enjoy the benefits reserved for the community.

COME REGISTRARSI
HOW TO REGISTER

IT • I prodotti premium Deda sono dotati di un esclusivo tag RFID. Utilizzando uno smartphone con tecnologia NFC, gli utenti possono connettersi istantaneamente a una pagina web sicura pensata per una registrazione semplice e veloce al Deda Cycling Club. Questa interazione wireless collega il prodotto fisico a una piattaforma digitale.

La tecnologia RFID è attualmente presente su alcuni dei prodotti di alta gamma di Deda, nello specifico i manubri in carbonio Alanera RS e Omnium, e le ruote in carbonio RS4, SL5, SL7 e Hero RS. Ogni prodotto dotato di tag rappresenta non solo il massimo in termini di prestazioni e design, ma anche una porta d'accesso a un mondo esclusivo di vantaggi.

Una volta attivato, il proprietario del prodotto accede a contenuti personalizzati, supporto tecnico, promozioni esclusive e attività riservate ai membri del Club.

EN • Deda's premium products are equipped with a unique RFID tag seamlessly integrated into each component. Using any NFC-enabled smartphone, cyclists can instantly connect to a secure web page designed for effortless registration to the Deda Cycling Club. This wireless interaction bridges the physical product with a digital platform.

This cutting-edge RFID technology is currently featured on a selection of Deda's most advanced components, in particular the Alanera RS and Omnium carbon handlebars, as well as the RS4, SL5, SL7, and Hero RS carbon wheels. Each tagged product not only represents peak performance and design, but also serves as a gateway to an exclusive world of benefits.

Upon activation, owners unlock access to tailored content, technical support, special promotions, and club-only experiences.

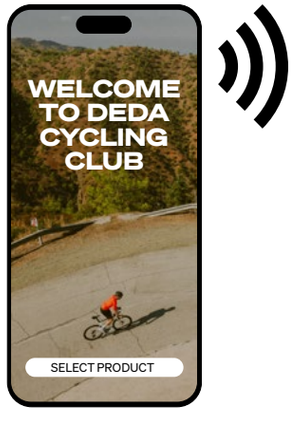

Tecnologia RFID
RFID Technology

Verifica dell'originalità ed estensione della garanzia.
Alcuni prodotti d'alta gamma come i manubri Alanera RS e Omnium e le ruote RS4, SL5, SL7 e HERO RS sono dotati di un RFID univoco che funziona con qualsiasi smartphone utilizzando la tecnologia NFC. La tecnologia wireless NFC consente la connessione ad una pagina web sicura per la registrazione del prodotto.

Originality verification and warranty extension.
Some high-end products such as the Alanera RS and Omnium handlebars and the RS4, SL5, SL7, and HERO RS wheels are equipped with a unique RFID that works with any smartphone using NFC technology. The wireless NFC technology enables connection to a secure web page for product registration.

ALANERA RS • OMNIUM

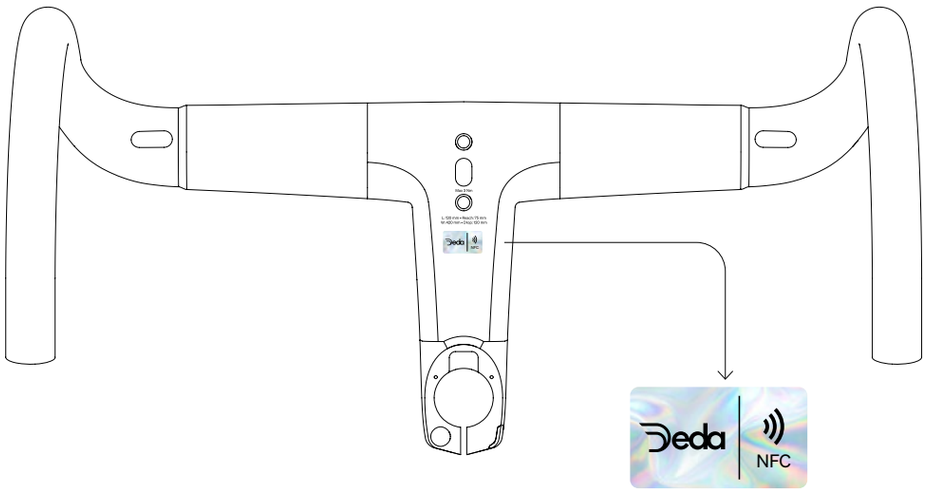

RS4 • SL5 • SL7 • HERO RS

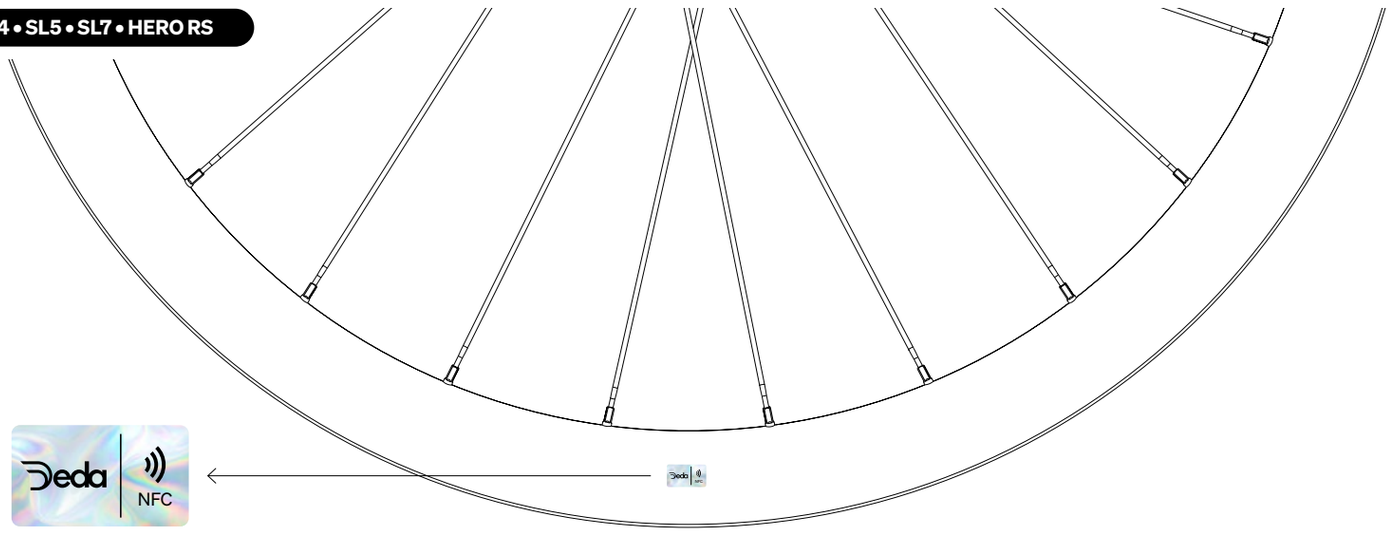

01

IT • Cerca il tag RFID presente sul tuo prodotto Deda.
EN • Find the RFID tag on your Deda product.

02

IT • Scansiona il tag RFID avvicinandoti col tuo smartphone.
EN • Scan the RFID tag approaching it with your smartphone.

03

IT • Seleziona nel menu il tuo prodotto. Successivamente seleziona le voci "Estendi la garanzia" e "Verifica l'originalità".
EN • Select your product from the menu. Then, select the options "Extend the warranty" and "Check originality."

04

IT • Eseguita l'operazione riceverai una mail col certificato riportante diverse informazioni sul tuo prodotto.
EN • Once the operation is completed, you will receive an email with the certificate with relevant info.

VAN RYSEL
DECATHLON
AG2R LA
MONDIALE
DURA-ACE

Posizionamento prodotti
Products comparison chart

ROAD	**Compatibilità Manubrio** Handlebar Compatibility				
	DCR (Internal cable routing)	S-DCR (Semi-internal cable routing)	**CAMPAGNOLO ™**	**SHIMANO ™**	**SRAM ™**
Alanera RS	●	●	Super Record	Dura-Ace	RED
Vinci	●	●	Super Record	Dura-Ace	RED
Superleggera RS	-	●	Super Record	Dura-Ace	RED
Superzero RS Carbon	●	●	Super Record	Dura-Ace	RED
Superzero RS Alloy	●	●	Record/Chorus	Ultegra	Force
Zero100	-	●	Chorus	Ultegra	Force
Zero2 DCR	●	●	Chorus/Centaur	Ultegra/105	Rival
Zero2	-	●	Chorus/Centaur	Ultegra/105	Rival
Zero1	-	●	Centaur	105/Tiagra	Apex
Zero*	-	●	-	Sora/Claris	Apex

* Prodotto disponibile solo per OEM / Available product for OEM only

GRAVEL	**Compatibilità Manubrio** Handlebar Compatibility				
	DCR (Internal cable routing)	S-DCR (Semi-internal cable routing)	**CAMPAGNOLO ™**	**SHIMANO ™**	**SRAM ™**
Superzero Gravel Carbon	●	●	EKAR	GRX 820	RED/Force
Superzero Gravel Alloy	●	●	EKAR/GT	GRX 820/610	RED/Force
Gravel 100	-	●	EKAR/GT	GRX 820/610	Force/Rival
Gravel 100 OEM*	-	●	-	GRX 610/400	Rival/Apex
Gera Carbon	●	●	EKAR/GT	GRX 820	Force
Gera Alloy	●	●	EKAR/GT	GRX 820/610	Force/Rival

* Prodotto disponibile solo per OEM / Available product for OEM only

MTB		
	SHIMANO ™	**SRAM ™**
Cross	XTR/XT	XX1/X01
Peak	SLX/DEORE	GX/NX

Configuratore Deda per passaggio cavi interni
Deda Configurator for internal cables routing

DCR SYSTEM

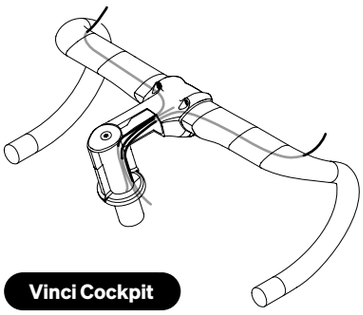

Vinci Cockpit

	Bike Configuration	Hydraulic Brake System		Caliper Brake System	
	Prodotti/Products	Cambio meccanico/ Mechanical Shifting	Cambio elettronico/ Electric Shifting	Cambio meccanico/ Mechanical Shifting	Cambio elettronico/ Electric Shifting
		◐ ⇄ ◐ ⇄	◐ ⚡ ◐	⇄ ◐ ⇄ Cavo freno anteriore esterno/ External front brake cable	◐ ⚡ Cavo freno anteriore esterno/ External front brake cable
Manubri/ Handlebar	**Alanera RS**	–	●	●*	●
Manubri/ Handlebar	**Vinci**	●	●	●	●
Manubri/ Handlebar	**Superzero** Carbon/Alloy	●	●	●	●
Manubri/ Handlebar	**Gera** Carbon/Alloy	●	●	●	●
Manubri/ Handlebar	**Zero 2 DCR**	●	●	●	●
Attacchi/ Stem	**Vinci**	●	●	●	●
Attacchi/ Stem	**Superbox**	●*	●	●*	●
		* Solo per forcella D-Shape / Only for D-Shape fork type			

S-DCR SYSTEM

Superbox

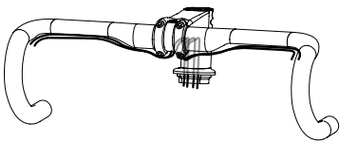

S-DCR Headset

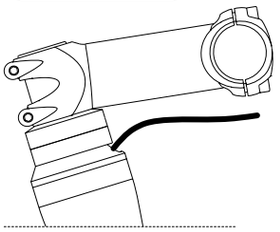

S-DCR Cover kit

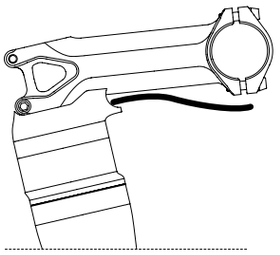

	Bike Configuration	Hydraulic Brake System		Caliper Brake System	
	Prodotti/Products	Cambio meccanico/ Mechanical Shifting	Cambio elettronico/ Electric Shifting	Cambio meccanico/ Mechanical Shifting	Cambio elettronico/ Electric Shifting
		◐ ⇄ ◐ ⇄	◐ ⚡ ◐	⇄ ◐ ⇄ Cavo freno anteriore esterno/ External front brake cable	◐ ⚡ Cavo freno anteriore esterno/ External front brake cable
Manubri/ Handlebar	**Superleggera RS**	●	●	●	●
Manubri/ Handlebar	**Superzero** Carbon/Alloy	●	●	●	●
Manubri/ Handlebar	**Vinci**	●	●	●	●
Manubri/ Handlebar	**Gera** Carbon/Alloy	●	●	●	●
Manubri/ Handlebar	**Zero 100**	●	●	●	●
Manubri/ Handlebar	**Zero 2**	●	●	●	●
Manubri/ Handlebar	**Zero 1**	●	●	●	●
Manubri/ Handlebar	**Zero**	●	●	●	●
Attacchi/ Stem	**Superbox, Superleggero RS, Superzero RS, Zero100, Zero2, Zero1, Zero, Cross, Peak**	●	●	●	●

◐ Brake Cable ⇄ Shifting Cable ⚡ Shifting Electric Wire

Specifiche della forcella DCR
DCR fork specifications

IT • Il sistema DCR richiede la presenza di un foro di ingresso per il cavo freno anteriore posizionato sul cannotto forcella. Viene raccomandato un diametro foro di 6 mm con un angolo di 20° per guidare il cavo durante l'assemblaggio.

EN • Deda-DCR System requires an entry a hole for the front brake cable located at the fork steerer. It is recommended a minimum diameter of 6mm with 20° hole angle in order to guide the cable routing during the assembly.

Vinci DCR System nella configurazione con quattro cavi interni.
Vinci DCR System with four internal cables configuration.

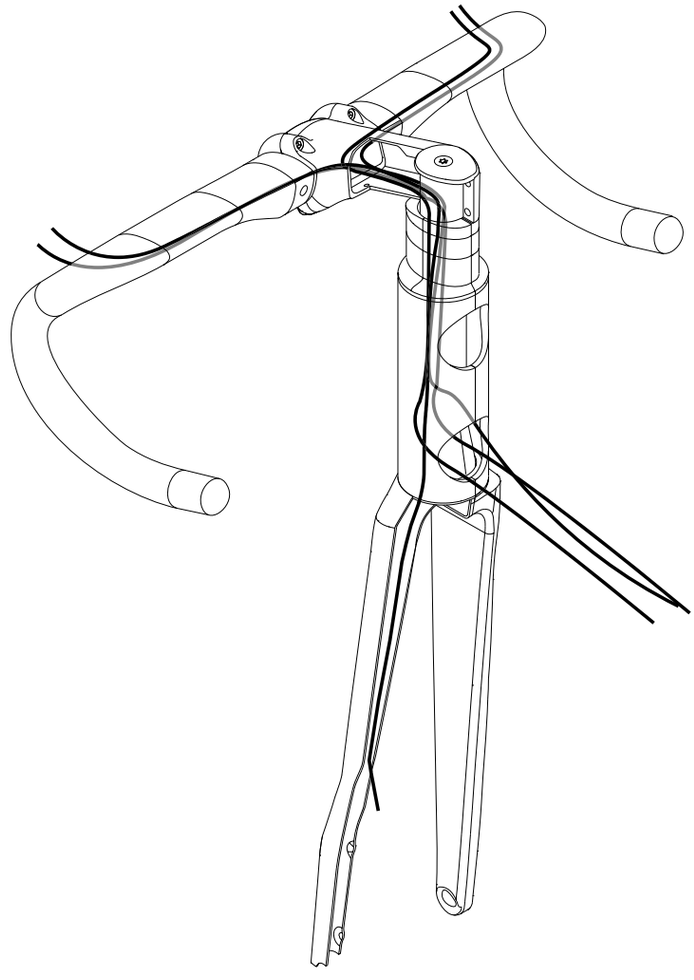

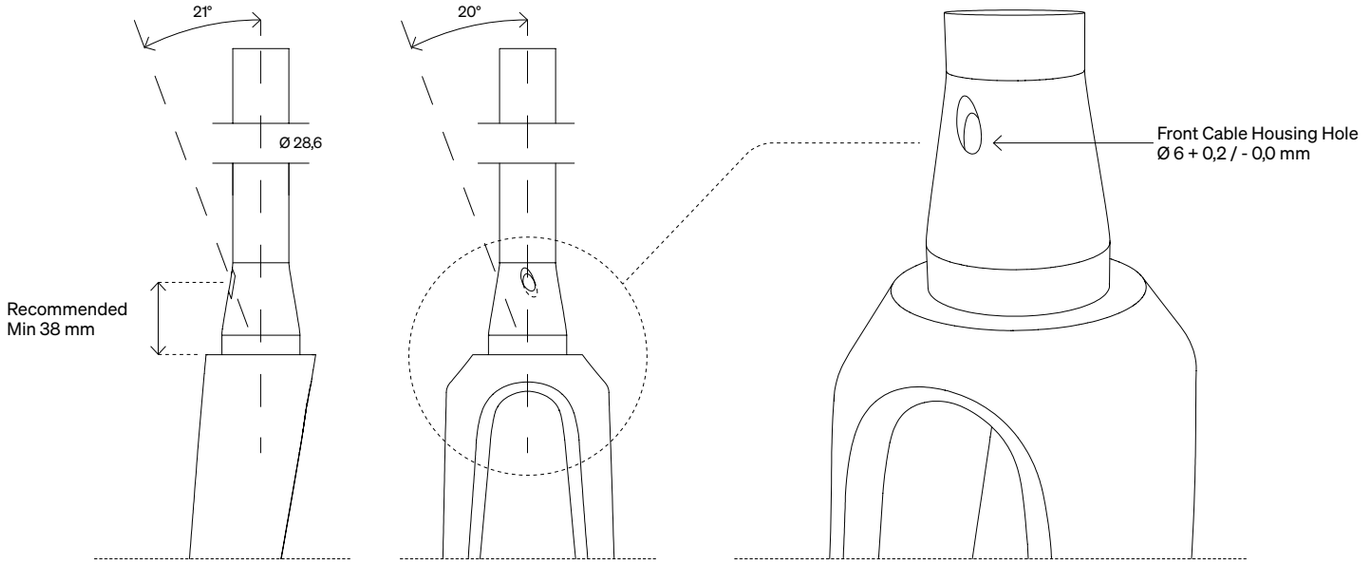

Serie sterzo DCR
Headset DCR

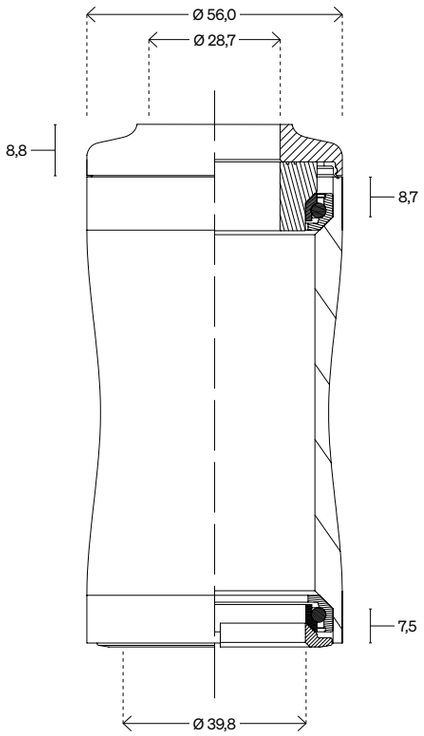

IT • Serie sterzo integrata per sistema DCR (Deda internal cable routing) compatibile con l'attacco Vinci, Alanera RS e Superbox. Progettato per un'integrazione completa dei cavi attraverso i cuscinetti sterzo. Il sistema DCR funziona con forcelle standard coniche (1-1/8" – 1.5") e richiede un tubo sterzo telaio con cuscinetto superiore da 52 mm (1.5"). Il design dell'anello di compressione prevede un'apertura che permette l'integrazione dei cavi nell'interspazio tra cuscinetto e forcella. Il topcover DCR per Alanera RS, Vinci e Superbox è incluso con il prodotto.

EN • Integrated headset for DCR (Deda internal cable routing) system and compatible with Vinci, Alanera RS and Superbox stem. It allows the full integration of the cables through the headset bearing. The DCR system works with a standard tapered fork steerer (1-1/8" - 1.5") and requires a 52mm (1.5") upper headset bearing od. The special compression ring design leaves room for the cables to fit the gap in between the headset bearing and the fork. The DCR topcover for Alanera RS, Vinci and Superbox is included in the kit sold with the product.

Modello serie sterzo:
Integrata 1.5" - 1.5"
Tipo di cuscinetti:
A contatto angolare (ACB)
in acciaio cromo
Misura cuscinetti:
• Superiore 51,9×40×8 mm
• Inferiore 51,9×40×8 mm
Angolo di contatto:
• Superiore: 45°×45°
• Inferiore: 45°×45° o 36°×45°
Tubo sterzo telaio:
Ø 56.0 mm
Cannotto forcella:
Conica 1 1/8"
(28.60 mm) - 1.5" (38.10 mm)
Calotta superiore:
Ø 56 mm
Cono di base:
Ø 39.8 mm alluminio.
(Incluso solo nella versione 45°×45°)
Altezza serie sterzo:
9.6 mm (8.8 + 0.8)
Peso:
80 g
Note: Compatibile solo con telai con tubo sterzo Ø 56 mm per cuscinetti da 1.5" (superiore e inferiore). Il topcover DCR per Alanera, Vinci e Superbox è incluso con il prodotto.

Headset model:
Integrated 1.5" - 1.5"
Bearings type:
Angular contact bearing; chrome steel
Bearings size:
• Upper 51,9×40×8 mm
• Lower 51,9×40×8 mm
Contact angle:
• Upper: 45°×45°
• Lower: 45°×45° or 36°×45°
Headtube:
Ø 56.0 mm
Fork steerer:
Tapered 1 1/8"
(28.6 mm) - 1.5" (38.10 mm)
Top cover:
Ø 56 mm
Crown race:
Ø 39.8 mm aluminum.
(Only for 45°×45° version)
Stack height:
9.6mm (8.8 + 0.8)
Weight:
80 g
Notes: Compatible with Ø 56 mm frame headtube designed for 1.5" bearings (upper & lower). The DCR topcover for Alanera, Vinci and Superbox is included in the kit sold with the product.

↓ Description	↓ Part Code	↓ EAN13 Code	↓ OEM Part Code	↓ EAN13 OEM Code
DCR headset, 1.5"- 1.5", upper 45°×45°, lower 45°×45°, ACB	HDDCR	8052783485903	HDDCRX	8052783485910
DCR headset, 1.5"- 1.5", upper 45°×45°, lower 36°×45°, ACB	HDDCR-36	8055774364119	HDDCR-36X	8055774364126

Serie sterzo S-DCR
S-DCR Headset

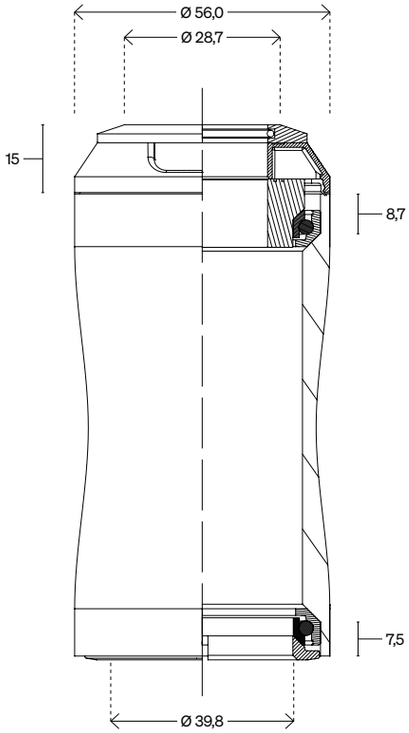

S-DCR Headset

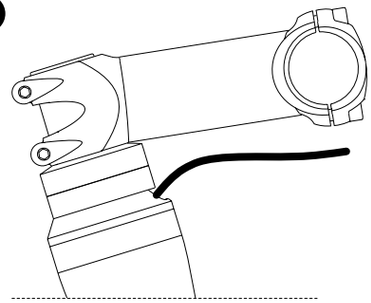

IT • S-DCR è un modello di serie sterzo integrata per sistema DCR (Deda internal cable routing) che permette il passaggio cavi direttamente nel topcover. Questa soluzione rende qualsiasi attacco Deda compatibile con un telaio DCR, una soluzione rapida e intelligente per la maggior parte dei marchi di biciclette. Permette la piena integrazione dei cavi, come la serie sterzo DCR, ma lasciando una parte dei cavi visibile sotto l'attacco manubrio. Il sistema funziona con forcelle standard coniche (1-1/8" – 1.5") e richiede un tubo sterzo telaio con cuscinetto superiore da 52 mm (1.5"). Il design dell'anello di compressione prevede un'apertura che permette l'integrazione dei cavi nell'interspazio tra cuscinetto e forcella. La serie sterzo S-DCR è compatibile anche con i distanziali Deda HSS per una migliore integrazione.

EN • S-DCR model is an integrated headset compatible with DCR system (Deda internal cable routing) that allows the direct cable routing into the topcover. This solution makes any Deda stems fitting a DCR frame, a quick and smart solution for most of bicycle brands. It allows the full integration of the cables, like the DCR headset, but leaving a portion of the cables visible under the stem. The system works with a standard tapered fork steerer (1-1/8" - 1.5") and requires a 52mm (1.5") upper headset bearing od. The special compression ring design leaves room for the cables to fit the gap in between the headset bearing and the fork. The S-DCR headset is also compatible with Deda HSS spacers for a better integration.

Modello serie sterzo:
Integrata 1.5" - 1.5"
Tipo di cuscinetti:
A contatto angolare (ACB) in acciaio cromo
Misura cuscinetti:
• Superiore 51,9×40×8 mm
• Inferiore 51,9×40×8 mm
Angolo di contatto:
45°×45°
Tubo sterzo telaio:
Ø 56.0 mm
Cannotto forcella:
Conica 1 1/8" (28.60 mm) - 1.5" (38.10 mm)
Calotta superiore:
Ø 56 mm
Cono di base:
Ø 39.8 mm alluminio
Altezza serie sterzo:
16.2 mm
Peso:
90 g
Note:
Compatibile con il passaggio di 4 cavi; gli spessori DEDA HSS sono raccomandati per la serie sterzo S-DCR.

Headset model:
Integrated 1.5" - 1.5"
Bearings type:
Angular contact bearing; chrome steel
Bearings size:
• Upper 51,9×40×8 mm
• Lower 51,9×40×8 mm
Contact angle:
45°×45°
Headtube:
Ø 56.0 mm
Fork steerer:
Tapered 1 1/8" (28.6 mm) - 1.5" (38.10 mm)
Top cover:
Ø 56 mm
Crown race:
Ø 39.8 mm aluminum
Stack height:
16.2 mm
Weight:
90 g
Note:
Compatible with 4 cables routing; DEDA HSS spacers are recommended for S-DCR headset.

↓ Description	↓ Part Code	↓ EAN13 Code	↓ OEM Part Code	↓ EAN13 OEM Code
S-DCR headset, 1.5"- 1.5", upper 45°×45°, lower 36°×45°, ACB	HDS-DCR	8055774360074	HDS-DCRX	8055774360081

REMA 1000
REITAN
RETAIL
Uno
RIDLEY
Deda

S-DCR Cover Kit

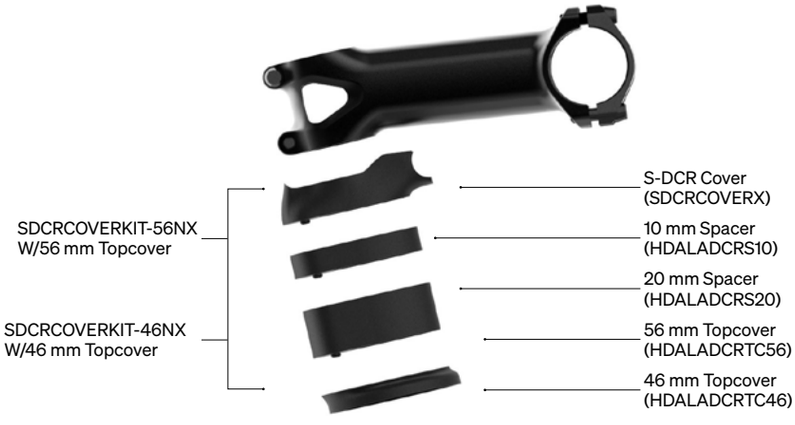

IT • Il kit S-DCR cover è un ulteriore applicazione del sistema DCR (Deda internal cable routing). Questa soluzione rende la maggior parte degli attacchi Deda compatibili con un telaio DCR, una soluzione rapida e intelligente per la maggior parte dei marchi di biciclette. Permette la piena integrazione dei cavi nel telaio, come la serie sterzo DCR, ma lasciando una parte dei cavi visibile sotto l'attacco manubrio. Il sistema funziona con forcelle standard coniche (1-1/8" – 1.5") e richiede un tubo sterzo telaio con cuscinetto superiore da 52 mm (1.5"). Il design dell'anello di compressione prevede un'apertura che permette l'integrazione dei cavi nell'interspazio tra cuscinetto e forcella. Il kit S-DCR cover è disponibile con topcover da 56mm per telai standard DCR o con topcover da 46 mm per telai con forcella D-shape.

EN • S-DCR cover kit is a further application of DCR system (Deda internal cable routing). This solution makes most of Deda stems compatible with a DCR frame, a quick and smart solution for most of bicycle brands. It allows the full integration of the cables into the frame, like the DCR headset, but leaving a portion of the cables visible under the stem. The system works with a standard tapered fork steerer (1-1/8" - 1.5") and requires a 52 mm (1.5") upper headset bearing od. The special compression ring design leaves room for the cables to fit the gap in between the headset bearing and the fork. S-DCR cover kit is available with 56 mm topcover for standard DCR frames or with 46 mm topcover for frames featuring a D-shape fork type.

Modello serie sterzo:
Integrata 1.5" - 1.5"
Tubo sterzo telaio:
Ø 56.0 mm
Calotta superiore:
Disponibile per Ø 56 mm o 46 mm (per forcelle D-shape)
Compatibilità attacco manubrio:
Superleggero, Superzero, Zero100, Zero2, Zero1, Zero, Cross, Peak
Peso:
48 g

Headset model:
Integrated 1.5" - 1.5"
Headtube:
Ø 56.0 mm
Top cover:
Available Ø 56 mm or 46 mm (for D-shape fork type)
Stem compatibility:
Superleggero, Superzero, Zero100, Zero2, Zero1, Zero, Cross, Peak
Weight:
48 g

↓ Description	↓ OEM Part Code	↓ EAN13 Code
S-DCR Cover kit, includes cover stem (V1), spacers (1×20,1×10), topcover 46 mm	SDCRCOVERKIT-46NX	8055774367660
S-DCR Cover kit, includes cover stem (V1), spacers (1×20,1×10), topcover 56 mm	SDCRCOVERKIT-56NX	8055774367677

Deda bike fit. Manubri Road
Deda bike fit. Road Handlebar

IT • Il manubrio è uno dei tre principali punti di contatto con la bici e controlla anche il modo in cui la bici si comporta. Svolge anche un ruolo importante in quanto determina la transizione tra la parte superiore, le leve o la posizione bassa e influisce sulla capacità di utilizzare efficacemente la bicicletta. Durante una corsa in pianura, in salita o in discesa, il comfort e una buona postura sono di vitale importanza. In Deda puoi trovare manubri per soddisfare le esigenze di tutti i tipi di ciclisti.

EN • The handlebar is one of the three major contact points with the bike and it also controls how the bike handles. It plays also an important role as it determines the transition between the top, hoods or drop position, and affects the capability of using effectively the bicycle. On a flat ride, uphill or descent , comfort and good posture are of vital importance. At Deda you can find handlebars to meet the needs of all types of cyclists.

→ **Alanera RS, Superzero RS Carbon, Superzero RS Alloy, Zero 2 DCR**

RHM-EVO

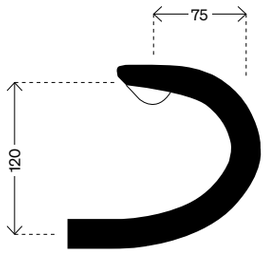

IT • Profondità ridotta / Maggior comfort nella presa bassa / Transizione veloce da leve a manubrio. Uso: racing e endurance

EN • Compact drop / More comfort on the low position / Fast transition levers to drop. Use: road racing and endurance

→ **Superleggera RS, Superleggera, Vinci, Superzero Alloy, Zero 100, Zero 2, Zero 1, Zero, Piega** (Ø26)

RHM

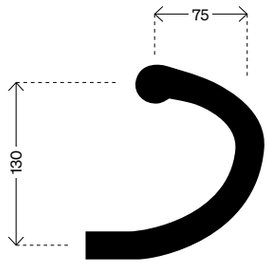

IT • Comfort / Profondità e altezza compatta / Transizione veloce da leve a manubrio. Uso: racing e endurance

EN • Comfort / Compact reach and drop / Fast transition levers to drops. Use: road racing and endurance

→ **Vinci** Shallow

SUPER SHALLOW

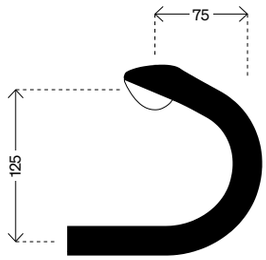

IT • Posizione ravvicinata delle leve / Più comfort / Facilità di presa. Uso: racing & endurance

EN • Shifter closer position / More comfort / Perfect grip. Use: road racing & endurance

→ **Zero 100** Shallow**, Speciale** (Ø26)

SHALLOW

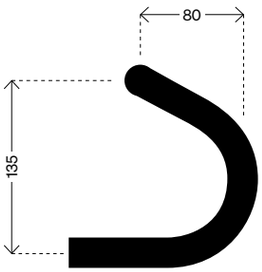

IT • Posizione più bassa / Comfort / Facilità di presa. Uso: racing e endurance

EN • Lower position / Comfort / Adjustability. Use: road racing and endurance

→ **Zero100** Deep

DEEP

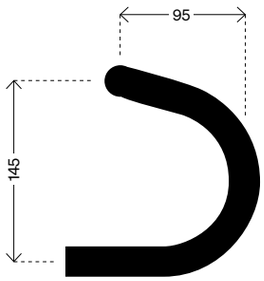

IT • Posizione bassa estrema molto profonda, ideale per braccia molto lunghe. Uso: pista e racing

EN • Extreme lower position, longest reach, suitable for rider with longer torso/arms. Use: track and road racing

→ **Zero100** Anatomic

ANATOMIC

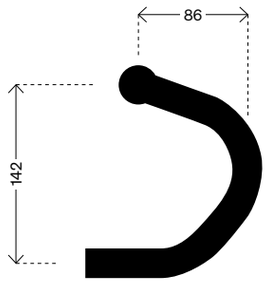

IT • Curva ergonomica / Posizioni fisse delle mani. Uso: sportivo e racing

EN • Ergonomic drops /Precise hand positions. Use: sportive & road racing

Deda bike fit. Manubri Gravel
Deda bike fit. Gravel Handlebar

IT • La gamma Gravel Deda è una linea di prodotti espressamente progettati per ciclisti che vogliono essere liberi di pedalare ovunque vogliano. Per la progettazione di questi prodotti abbiamo tenuto in considerazione che le bici gravel sono fatte per affrontare condizioni molto varie da normali strade bianche a terreni molto duri e veloci. In Deda puoi trovare manubri di varie forme, una gamma di drop, reach, larghezze e materiali per soddisfare le esigenze di tutti i tipi di ciclisti.

EN • The Deda Gravel range is a line of products especially designed for cyclists that want to be able to ride wherever they want. When we have designed these products, we kept in mind that gravel bikes are made to face a wide range of conditions from regular white roads to hard and fast terrains.
At Deda you can find gravel handlebars of various shapes, a range of drops, reach, widths and materials to meet the needs of all types of cyclists.

→ **Superzero Gravel** Carbon

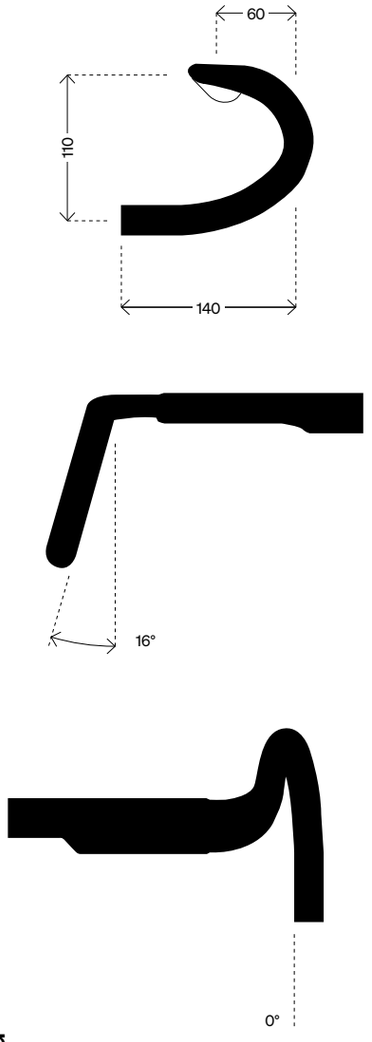

EOS Speed

IT • Posizione ravvicinata delle leve / Maggior comfort in presa bassa / Ottimo controllo su terreni impegnativi (Angolo apertura 16°).

EN • Closer position of brake levers / More comfort on the low position / More stability on challenging terrains (16 degrees flare angle).

→ **Superzero Gravel** Alloy

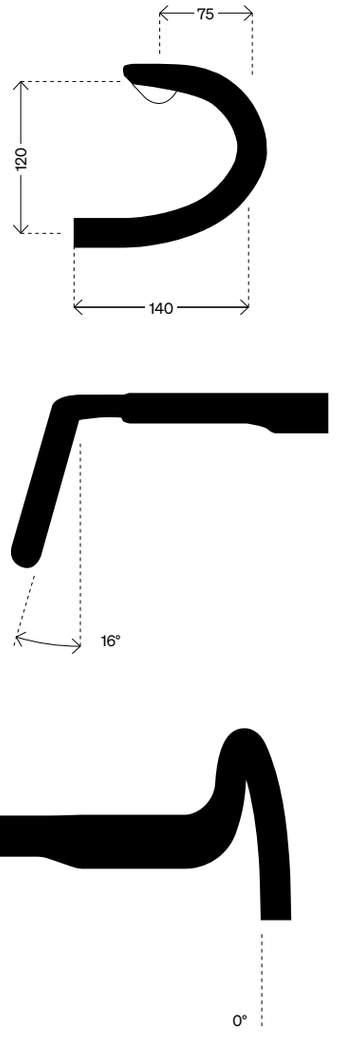

RHM-EVO

IT • Profondità ridotta / Maggior comfort nella presa bassa / Transizione veloce da leve a manubrio. Ottimo controllo su terreni impegnativi (Angolo apertura 16°).

EN • Compact drop / More comfort on the low position / Fast transition levers to drop. Great stability on challenging terrains (16 degrees flare angle).

→ **Gravel100**

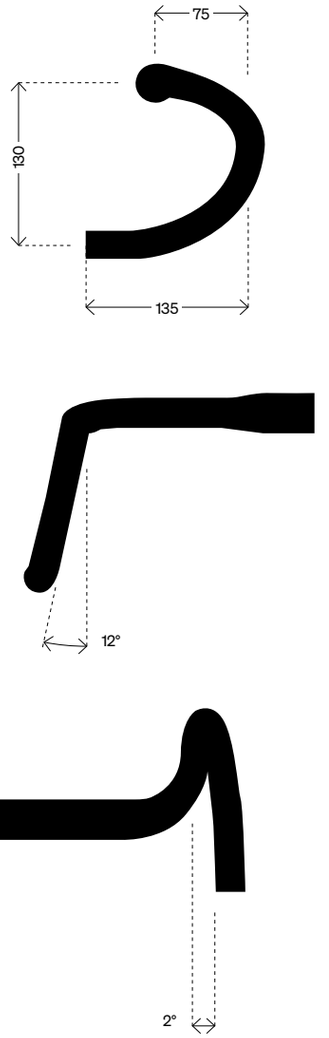

RHM

IT • Stessa presa RHM manubri da corsa / Ottimo controllo su terreni impegnativi (Angolo apertura 12°. Angolo esterno 2°)

EN • Regular RHM shape of road handlebars / Great stability on challenging terrains (12 degrees flare angle. 2 degrees outsweep angle)

→ **Gera** Carbon

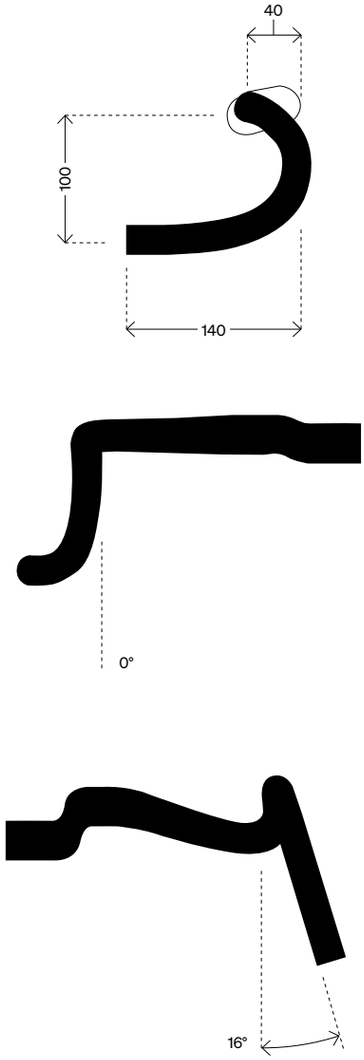

EOS Endurance

IT • Multiple opzioni per la posizione delle mani / Leve in posizione super ravvicinata / Estremo comfort in presa bassa / Ottimo controllo su terreni impegnativi (Angolo esterno 16°).

EN • Multiple hands positions / Super close position of brake levers / Superior comfort on the low position / More stability on challenging terrains (16 degrees outsweep angle).

→ **Gera** Alloy

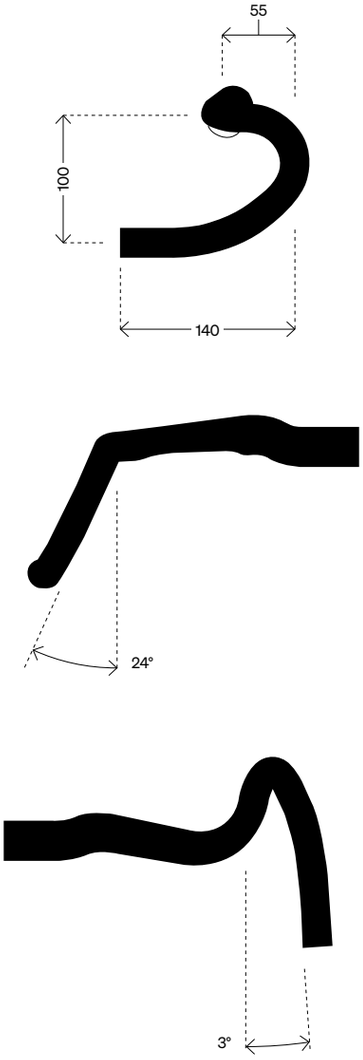

EOS Endurance

IT • Multiple opzioni per la posizione delle mani / Leve in posizione super ravvicinata / Estremo comfort in presa bassa / Estremo controllo su terreni impegnativi (Angolo apertura 24°).

EN • Multiple hands positions / Super close position of brake levers / Superior comfort on the low position / Extreme stability on challenging terrains (24 degrees flare angle).

Deda bike fit. Attacchi
Deda bike fit. Stem

82°/73°

IT • L'importanza di un attacco adatto alle tue esigenze. Tutti gli attacchi Deda sono realizzati in alluminio, dall'alta gamma in 7050 e 2014 alla più comune lega 6061. La nostra filosofia è progettare e realizzare prodotti utilizzando i migliori materiali in termini di resistenza e leggerezza. Per gli attacchi quel materiale è ancora l'alluminio. Il comfort del ciclista dipende dalla lunghezza e dall'angolazione dell'attacco. In Deda puoi trovare attacchi di varie lunghezze e angoli. Recentemente lo stile di guida sulla bicicletta e la posizione sono cambiati molto, infatti, offriamo attacchi con molte opzioni di angolo come 82°, 73° e 70°.

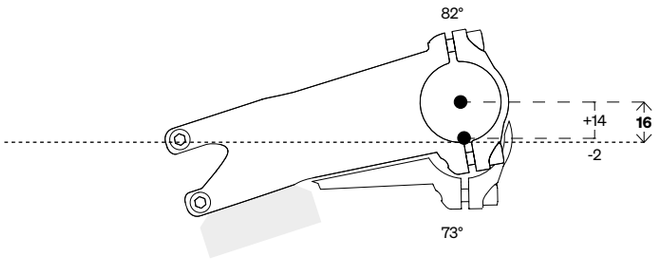

90

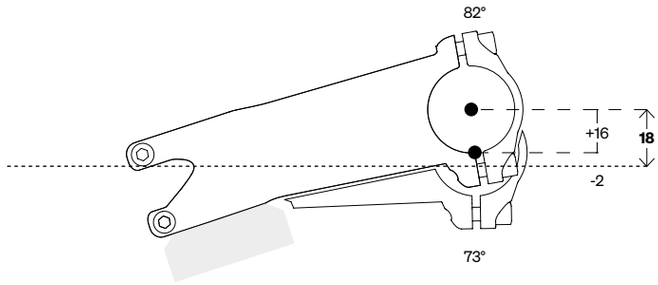

100

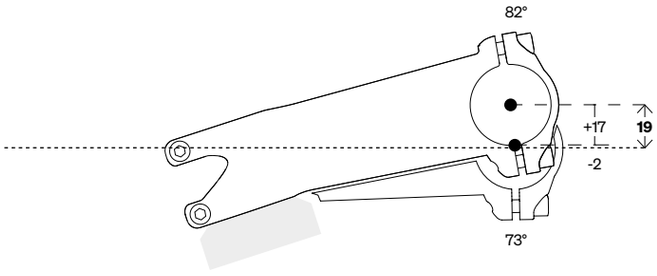

110

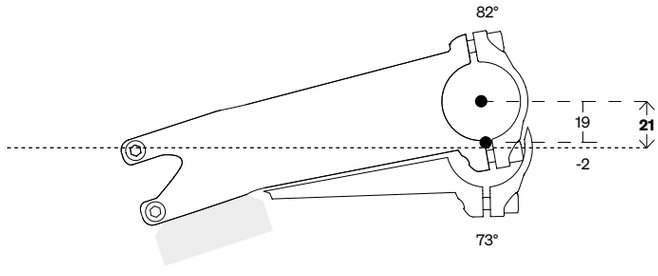

120

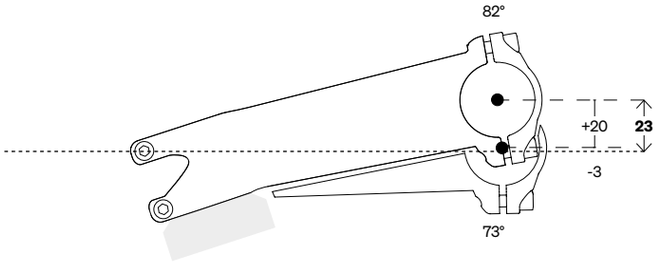

130

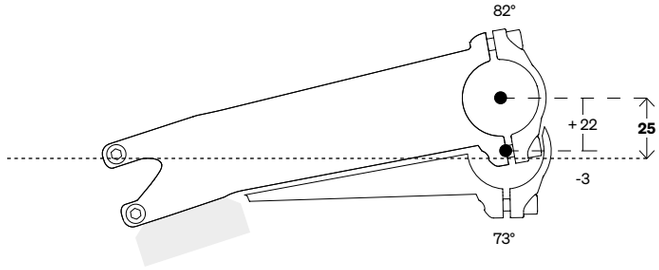

140

Deda bike fit. Attacchi

Deda bike fit. Stem

82°/70°

EN • The importance of a bicycle stem that fits your needs. All Deda stems are made in aluminium, from high-end 7050 and 2014 to the most common 6061 alloy series. Our philosophy is to design and manufacture products by using the best materials in terms of strength and lightness. For bicycle stems that material is still the aluminium. The cyclist's comfort depends on the stem length and angle. At Deda you can find bicycle stems of various lengths and angles. Recently the riding style on the bicycle and position has changed a lot, in fact, we offer stems with many angle options such as 82°, 73° and 70°.

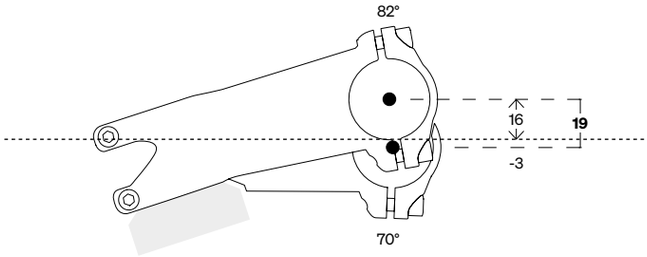

90

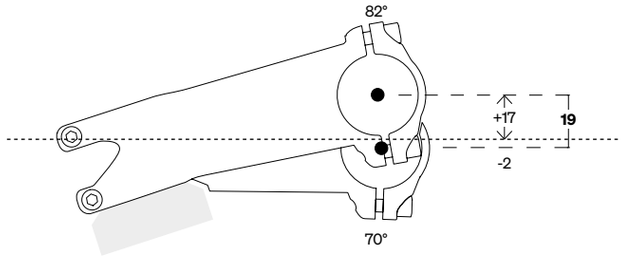

100

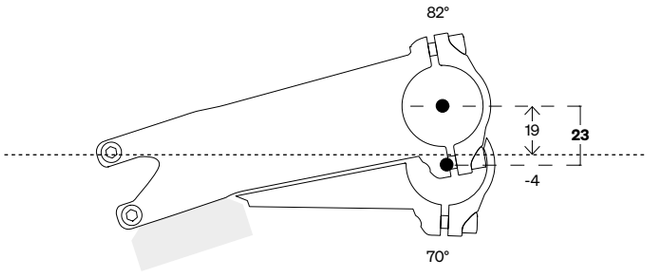

110

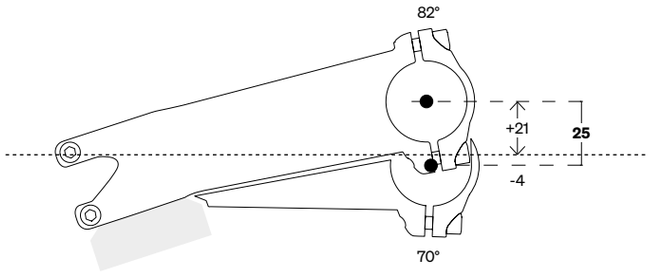

120

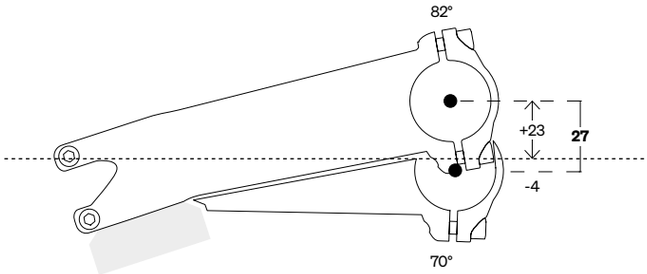

130

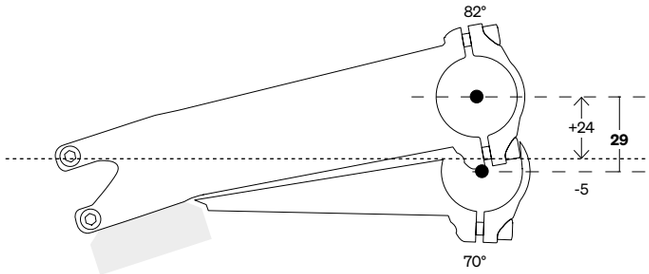

140

Cerchi Road
Road Rims

Cerchi road per freni a disco. Tubeless ready
Road rims disc brake. Tubeless ready

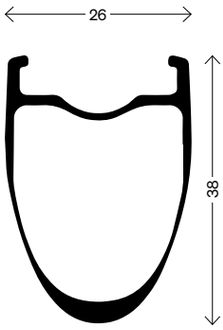

RS4

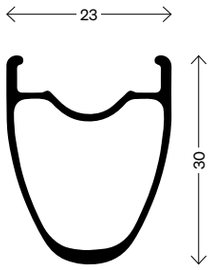

RS3

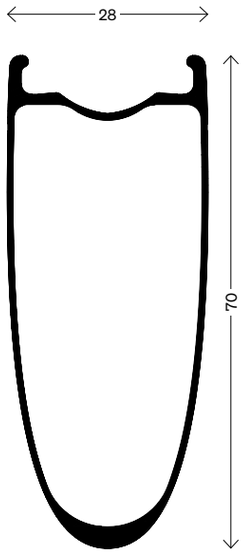

SL7

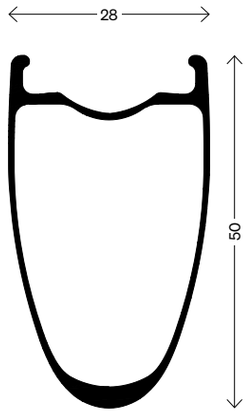

SL5

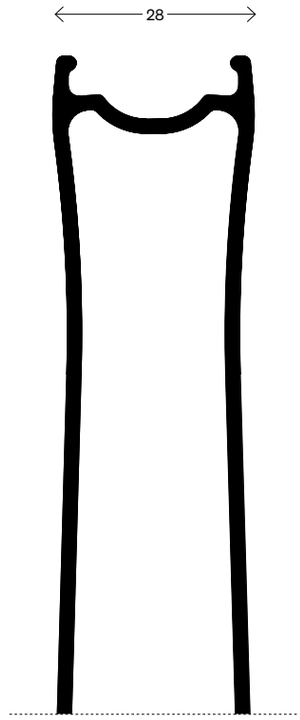

HERO RS

Cerchi road per freni a disco. Tubolare
Road disc brake. Tubular

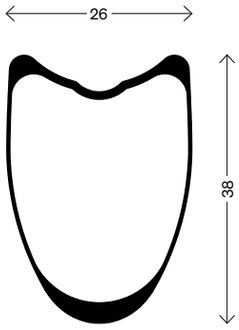

SL3

Cerchi Gravel
Gravel Rims

Cerchi gravel per freni a disco. Tubeless ready
Gravel rims disc brake. Tubeless ready

GERA CARBON

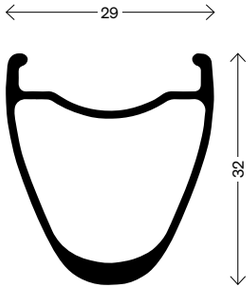

GERA ALLOY

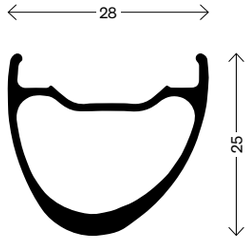

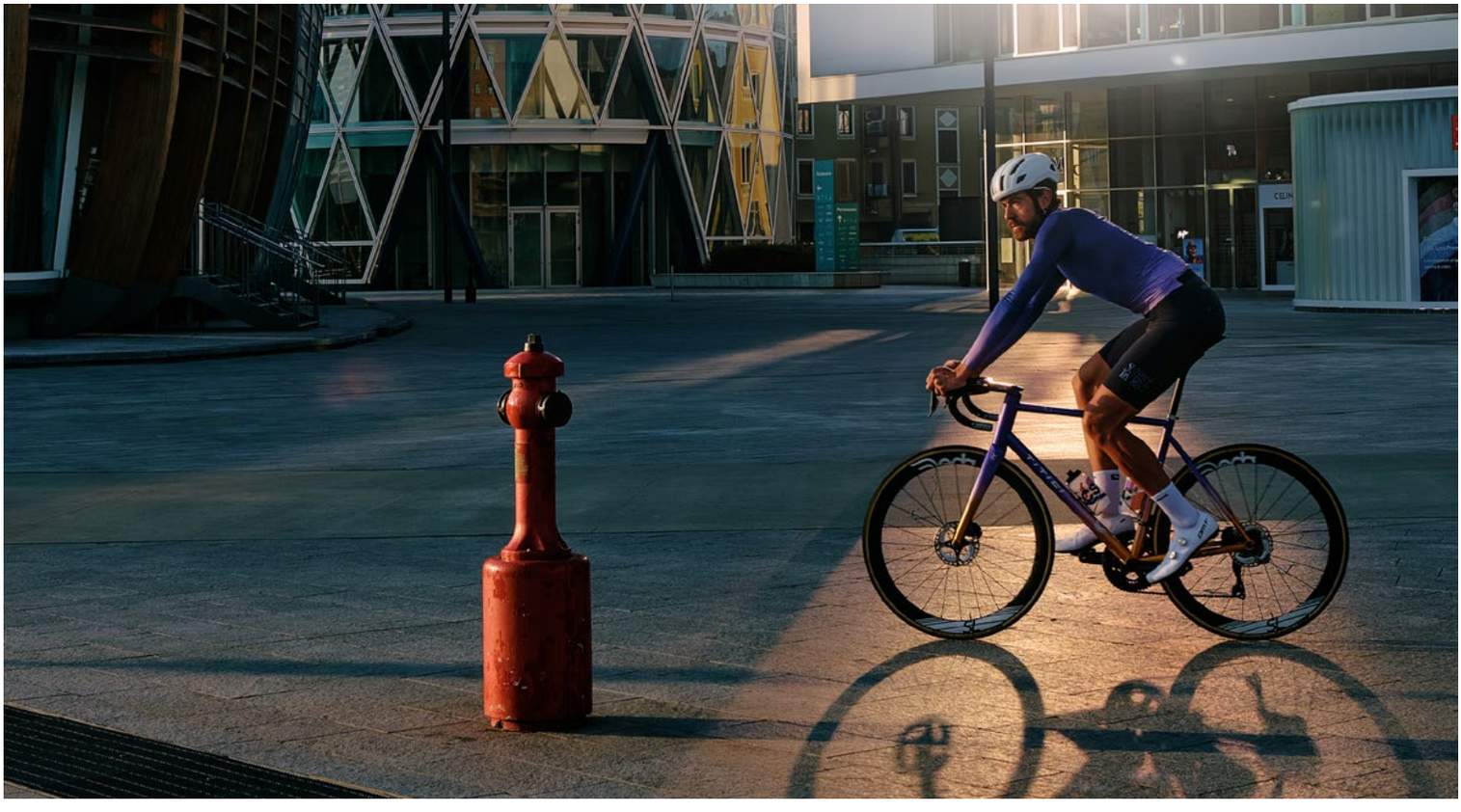

ROAD

Ruote/Wheels **26-57**
NEW SL5 26-31
NEW SL7 32-37
Tecnologia Mozzi Allroad/ Allroad Hub Technology 39
Nuovo cerchio da 23C/ The new 23C rim 40
Tecnologia RFID/ RFID Technology 41
NEW HERO RS 42-47
RS4 48
RS3 50
SL3 52
Disc Brake Rotor 54
Accessori ruote/Wheels accessories 56

Alanera RS → Manubrio/Handlebar **58-71**

RS Seatpost
RS Seatpost 0 mm → Reggisella/Seatpost 72
NEW RS Seatpost 12 mm → Reggisella/Seatpost 72
RS Seatpost 25 mm → Reggisella/Seatpost 72

Vinci **74**
Vinci RHM → Manubrio/Handlebar 76
Vinci Shallow → Manubrio/Handlebar 77
Vinci → Attacco/Stem 78
Accessori Vinci/Vinci accessories 80

Superbox V2 → Attacco/Stem **82**
Accessori Superbox/Superbox accessories 85-86

Superleggera RS **88**
Superleggera RS → Manubrio/Handlebar 90
Superleggero RS → Attacco/Stem 91

Superleggera **92**
Superleggera → Manubrio/Handlebar 94
Superleggero → Attacco/Stem 95

Superzero RS **96**
Superzero RS Carbon → Manubrio/Handlebar 98
Superzero RS → Attacco/Stem 101
Superzero RS Alloy → Manubrio/Handlebar 102

Superzero
Superzero Alloy DCR → Manubrio/Handlebar 104
Superzero → Attacco/Stem 106

Zero100 **108**
Zero100 RHM → Manubrio/Handlebar 110
Zero100 Shallow → Manubrio/Handlebar 111
Zero100 Deep → Manubrio/Handlebar 112
Zero100 Anatomic → Manubrio/Handlebar 113
Zero100 → Attacco/Stem 114
Zero100 Team 70° → Attacco/Stem 115
Zero100 12 mm → Reggisella/Seatpost 116
Zero100 0 mm → Reggisella/Seatpost 117

Zero2 **118**
Zero2 DCR → Manubrio/Handlebar 120
Zero2 → Manubrio/Handlebar 121
Zero2 → Attacco/Stem 122
Zero2 → Reggisella/Seatpost 123

Zero1 **124**
Zero1 → Manubrio/Handlebar 126
Zero1 → Attacco/Stem 127
Zero1 → Reggisella/Seatpost 128

Zero
Zero → Manubrio/Handlebar 130
Zero → Attacco/Stem 131
Zero 17° → Attacco/Stem 132
Zero → Reggisella/Seatpost 133

SL5

Ride on Air

IT • Progettata per ciclisti che richiedono performance, durata e velocità, la ruota in carbonio SL5 trova il perfetto equilibrio tra efficienza aerodinamica e versatilità.

EN • Engineered for riders who demand precision, durability, and speed, the SL5 carbon wheelset strikes the perfect balance between aerodynamic efficiency and everyday usability.

PIRELLI
PIRELLI

SLS

For me, the bike means freedom; my way of life. Thanks to the bike, I try to inspire other women, especially girls who can look up to a woman as a inspiration on these days.

ANE SANTESTEBAN. LABORAL KUTXA

SL5

UCI Approved **Tubeless Ready**

Road Gravel

IT • Progettata per ciclisti che richiedono performance, durata e velocità, la ruota in carbonio SL5 trova il perfetto equilibrio tra efficienza aerodinamica e versatilità. Con un'altezza del cerchio di 50 mm e una larghezza interna di 23 mm, la SL5 garantisce un supporto eccezionale del pneumatico e stabilità, sia che si scelga una configurazione clincher o tubeless. Realizzata in fibra di carbonio ad alto modulo UD e 3K, la SL5 assicura rigidità straordinaria e una trasmissione di potenza reattiva, mantenendo al contempo un peso contenuto di soli 1.390 g per coppia. Dotata di nuovi mozzi "Allroad", cuscinetti in acciaio e un robusto sistema di ingaggio a doppio cricchetto da 40 denti, la SL5 garantisce alto scorrimento e una trasmissione delle potenza rapida e efficiente.

EN • Engineered for riders who demand precision, durability, and speed, the SL5 carbon wheelset strikes the perfect balance between aerodynamic efficiency and everyday usability. Featuring a 50 mm rim height and a 23 mm internal width, the SL5 delivers exceptional tire support and stability, whether you choose clincher or tubeless setups. Made in high-modulus UD & 3K carbo fiber, the SL5 ensures outstanding stiffness and responsive power transfer, all while maintaining a lightweight profile at just 1,390 g per pair. Equipped with new "Allroad" hubs, steel bearings, and a robust 40-tooth dual-ratchet engagement system, the SL5 guarantees smooth rolling and efficient power trasmission.

SL5 + RFID Technology

Materiale:
Fibra di carbonio ad alto modulo, struttura combinata UD e 3K
Altezza del cerchio:
50 mm
Larghezza del cerchio:
• 28 mm esterna
• 23 mm interna (ETRTO 622×23C)
Raggi:
24 raggi, anteriore e posteriore; neri
Nipples:
Nipples autobloccanti ABS®, in alluminio, lunghezza 15 mm, neri
Mozzo:
• Corpo mozzo in alluminio AL7075, asse anteriore da 17 mm, posteriore da 15 mm, cuscinetti in acciaio
• Sistema a 2 cricchetti da 40 denti (40T)
Fissaggio disco freno:
Shimano Center Lock
Compatibilità perno passante:
• Anteriore 12×100 mm
• Posteriore 12×142 mm
Corpetto ruota libera:
• Shimano, SRAM XDR, Campagnolo N3W
Accessori inclusi:
Nastro per cerchio tubeless, valvole tubeless, ghiera di bloccaggio Center Lock, lubrificante per cricchetti.
Compatibilità pneumatici:
Copertoncino (clincher) o tubeless-ready
Peso:
1.390 g

Material:
High modulus carbon fiber, UD and 3K combined structure
Rim height:
50 mm
Rim width:
• 28 mm external
• 23 mm internal (ETRTO 622×23C)
Spokes:
24 spoke, front and rear; black
Nipples:
Self-locking ABS® nipples, aluminum, 15 mm length, black
Hub:
• AL7075 hub body, 17 mm front axle, 15 mm rear axle, steel bearings
• 40T 2-ratchet
Disc brake rotor:
Shimano Center Lock
Thru-axle compatibility:
• Front 12×100 mm
• Rear 12×142 mm
Freehub:
• Shimano, Sram XDR, Campagnolo N3W
Accessories included:
Tubeless rim tape, tubeless valves, Center Lock lockring, freehub ratchets lubricant.
Tire compatibility:
Clincher or tubeless-ready
Weight:
1.390 g

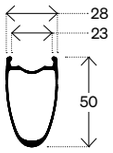

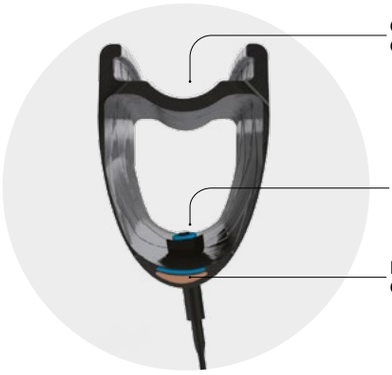

1 • Washer per l'alloggiamento della molla/
Washer for spring housing
2 • Molla cilindrica/Cylindrical spring
3 • Cricchetto interno/Inner ratchet
4 • Cricchetto esterno/Outer ratchet

↓ Description	↓ Deda Part Code	↓ EAN13 Code
SL5 DB, Wheels, Carbon, Tubeless-ready, 50 mm, 23C, Shimano	WDS5DB-SHI	8055774369893
SL5 DB, Wheels, Carbon, Tubeless-ready, 50 mm, 23C, Sram XDR	WDS5DB-XDR	8055774369909
SL5 DB, Wheel front, Carbon, Tubeless-ready, 50 mm, 23C	WDS5DB-F	8055774369916
SL5 DB, Wheel rear, Carbon, Tubeless-ready, 50 mm, 23C, Shimano	WDS5DB-RSHI	8055774369923
SL5 DB, Wheel rear, Carbon, Tubeless-ready, 50 mm, 23C, Sram XDR	WDS5DB-RXDR	8055774369930

SL7

Ride on Air

IT • La nuova ruota SL7 in carbonio è l'emblema della performance.
Con un'altezza del cerchio di 70 mm e una larghezza interna di 23 mm, la SL7 offre
il perfetto equilibrio tra vantaggio aerodinamico e stabilità ad alte velocità.

EN • With a 70 mm rim depth and 23 mm internal width,
the SL7 strikes the perfect balance between
aerodynamic advantage and high-speed stability.

PIRELLI
PIRELLI
P ZERO
P ZERO

Deda

Sprinting, for me, is about nano-second decision making with the briefest glimpse in your peripheral vision. It's instinct, speed and ultimately the single-minded desire to finish first. SAM BENNET. DECATHLON AG2R LA MONDIALE TEAM

SL7

UCI Approved **Tubeless Ready**

Road

IT • La nuova ruota SL7 in carbonio è l'emblema della performance. Con un'altezza del cerchio di 70 mm e una larghezza interna di 23 mm, la SL7 offre il perfetto equilibrio tra vantaggio aerodinamico e stabilità ad alte velocità. Realizzata in fibra di carbonio ad alto modulo con una trama combinata UD e 3K, la SL7 garantisce rigidità e trasferimento di potenza a livello elite, mantenendo al contempo un'ottima sensibilità di guida. Il profilo del cerchio e ottimizzato per fendere l'aria, che tu stia inseguendo una fuga o correndo contro il tempo. Al cuore della SL7 c'è il nuovo mozzo "Allroad" di Deda, con cuscinetti in acciaio e un preciso sistema di ingaggio a 2 cricchetti da 40 denti, per una risposta immediata. Compatibile con rotori Shimano Center Lock e perni passanti moderni 12×100 mm / 12×142 mm, la SL7 e pronta per qualsiasi bici da strada con freni a disco.

EN • With a 70 mm rim depth and 23 mm internal width, the SL7 strikes the perfect balance between aerodynamic advantage and high-speed stability. Crafted from high-modulus carbon fiber with a combined UD and 3K, the SL7 delivers elite-level stiffness and power transfer while maintaining excellent ride feel. The rim profile is optimized to slice through the air—whether you're chasing a breakaway or racing against the clock. At the heart of the SL7 is Deda's new "Allroad" hub, featuring steel bearings and a precise 40-tooth, 2-pawl engagement system for instant response. Compatible with Shimano Center Lock rotors and modern 12×100 mm / 12×142 mm thru-axles, the SL7 is ready for any disc brake road bike.

SL7 + RFID Technology

Materiale:
Fibra di carbonio ad alto modulo, struttura combinata UD e 3K
Altezza del cerchio:
70 mm
Larghezza del cerchio:
• 28 mm esterna
• 23 mm interna (ETRTO 622×23C)
Raggi:
24 raggi, anteriore e posteriore, neri
Nipples:
Nipples autobloccanti ABS®, in alluminio, lunghezza 15 mm, neri
Mozzo:
• Corpo mozzo in alluminio AL7075, asse anteriore da 17 mm, posteriore da 15 mm, cuscinetti in acciaio
• Sistema a 2 cricchetti da 40 denti (40T)
Fissaggio disco freno:
Shimano Center Lock
Compatibilità perno passante:
• Anteriore: 12×100 mm
• Posteriore: 12×142 mm
Corpetto ruota libera:
• Shimano, Sram XDR, Campagnolo N3W
Accessori inclusi:
Nastro tubeless per cerchio, valvole tubeless, ghiera di bloccaggio Center Lock, lubrificante per i cricchetti.
Compatibilità pneumatici:
Copertoncino (clincher) o tubeless-ready
Peso:
1.470 g

Material:
High modulus carbon fiber, UD and 3K combined structure
Rim height:
70 mm
Rim width:
• 28 mm external
• 23 mm internal (ETRTO 622×23C)
Spokes:
24 spoke, front and rear; black
Nipples:
Self-locking abs® nipples, aluminum, 15 mm length, black
Hub:
• AL7075 hub body, 17 mm front axle, 15 mm rear axle, steel bearings
• 40T 2-ratchet
Disc brake rotor:
Shimano Center Lock
Thru-axle compatibility:
• Front 12×100 mm
• Rear 12×142 mm
Freehub:
• Shimano, Sram XDR, Campagnolo N3W
Accessories included:
Tubeless rim tape, tubeless valves, Center Lock lockring, freehub ratchets lubricant.
Tire compatibility:
Clincher or tubeless-ready
Weight:
1.470 g

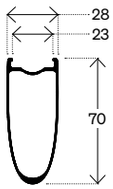

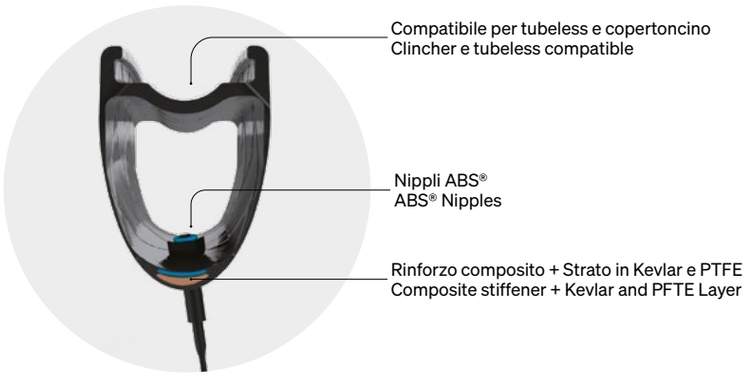

1 • Washer per l'alloggiamento della molla/
Washer for spring housing
2 • Molla cilindrica/Cylindrical spring
3 • Cricchetto interno/Inner ratchet
4 • Cricchetto esterno/Outer ratchet

↓ Description	↓ Deda Part Code	↓ EAN13 Code
SL7 DB, Wheels, Carbon, Tubeless-ready, 70 mm, 23C, Shimano	WDS7DB-SHI	8055774369879
SL7 DB, Wheels, Carbon, Tubeless-ready, 70 mm, 23C, Sram XDR	WDS7DB-XDR	8055774369886
SL7 DB, Wheel front, Carbon, Tubeless-ready, 70 mm, 23C	WDS7DB-F	8055774369947
SL7 DB, Wheel rear, Carbon, Tubeless-ready, 70 mm, 23C, Shimano	WDS7DB-RSHI	8055774369954
SL7 DB, Wheel rear, Carbon, Tubeless-ready, 70 mm, 23C, Sram XDR	WDS7DB-RXDR	8055774369961

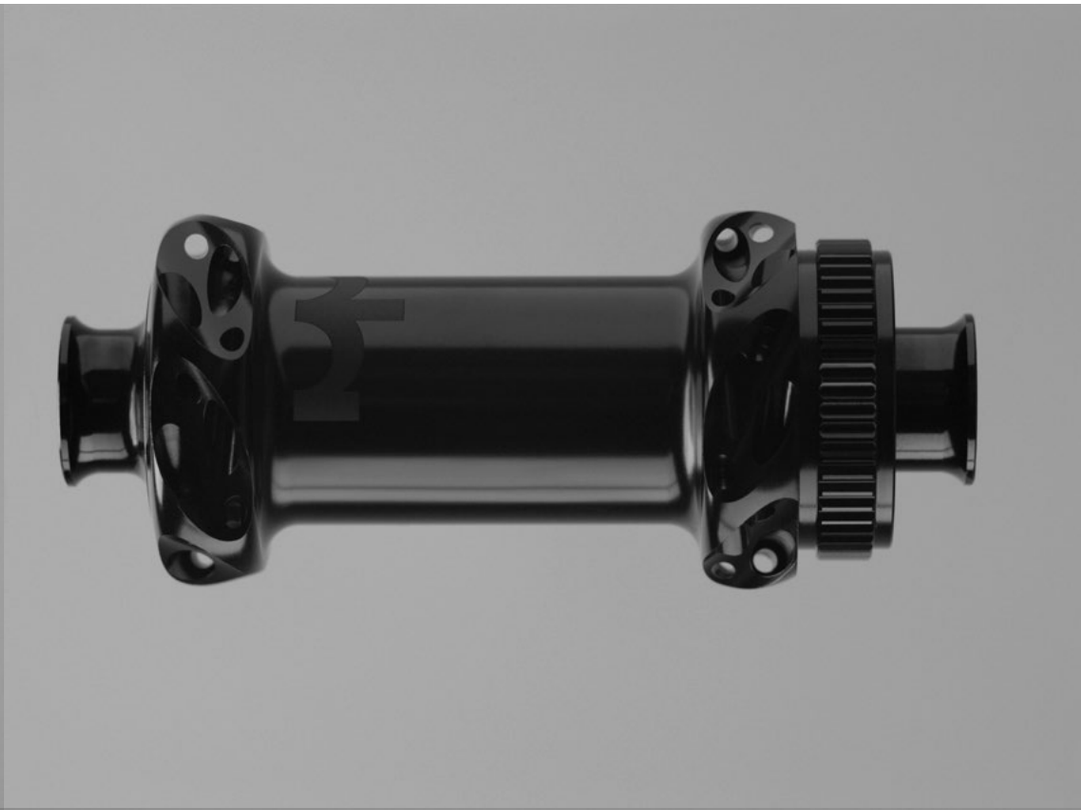

Tecnologia Mozzi Allroad
Allroad Hub Technology

Mozzi ALLROAD
L'evoluzione dei mozzi RS di Deda
I nuovi mozzi Allroad nascono dall'esperienza dei mozzi RS, ma introducono importanti novità in termini di prestazioni e design. Grazie alle flange ribassate, il corpo mozzo è più compatto e aerodinamico, contribuendo a una minore resistenza all'aria e a una maggiore efficienza durante la pedalata. La struttura alleggerita garantisce una riduzione di peso senza comprometterne la robustezza. Il risultato è un mozzo affidabile, scorrevole e pronto ad affrontare ogni tipo di percorso, dall'asfalto al gravel più tecnico.
I mozzi Allroad sono pensati per i ciclisti che cercano versatilità, durata e performance, in una soluzione all'avanguardia per le ruote moderne.

ALLROAD Hubs
The Evolution of Deda's RS Hubs
The new Allroad hubs build on the experience of Deda's RS hubs, introducing key innovations in both performance and design. With lower flanges, the hub body is more compact and aerodynamic, reducing air resistance and improving pedaling efficiency. The lightweight structure ensures a significant weight reduction without compromising strength.
The result is a reliable, smooth-running hub ready to tackle any type of terrain, from road to demanding gravel tracks. Allroad hubs are designed for cyclists seeking versatility, durability, and performance, an advanced solution for modern wheels.

Ratchet libero
Ratchet not engaged

Ratchet innestato
Ratchet engaged

I nuovi mozzi Allroad sono dotati di un sistema a doppio ratchet da 40 denti, per l'innesto della ruota libera. Il ratchet più piccolo si trova nel corpo ruota libera mentre quello più grande si trova all'interno della flangia mozzo. L'angolo di ingaggio è dimezzato rispetto alla generazione precedente, offrendo una risposta immediata alla pedalata. La molla cilindrica assicura maggiore stabilità e costanza nel funzionamento del meccanismo. Inoltre, l'aggiunta di un washer dedicato al supporto della molla riduce ulteriormente gli attriti interni, migliorando la scorrevolezza e l'affidabilità nel tempo.

The new Allroad hubs are equipped with a dual 40-tooth ratchet system for the freewheel engagement. The smaller ratchet is located inside the freehub body, while the larger one is integrated into the hub flange. The engagement angle is halved compared to the previous generation, delivering a quicker response to each pedal stroke. The cylindrical spring ensures greater stability and consistent performance of the mechanism. Additionally, the introduction of a dedicated washer supporting the spring further reduces internal friction, enhancing smoothness and long-term reliability.

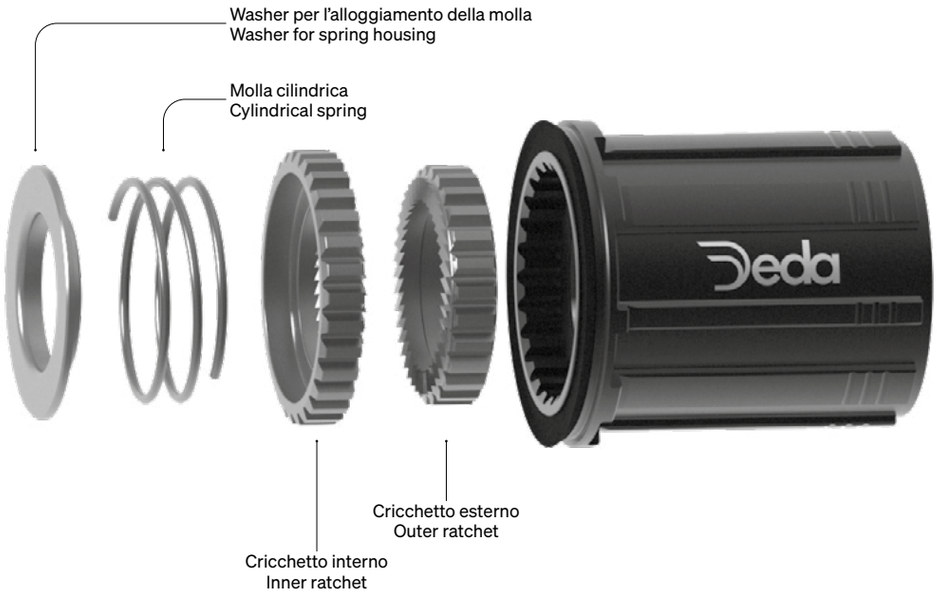

Nuovo cerchio da 23C
The new 23C rim

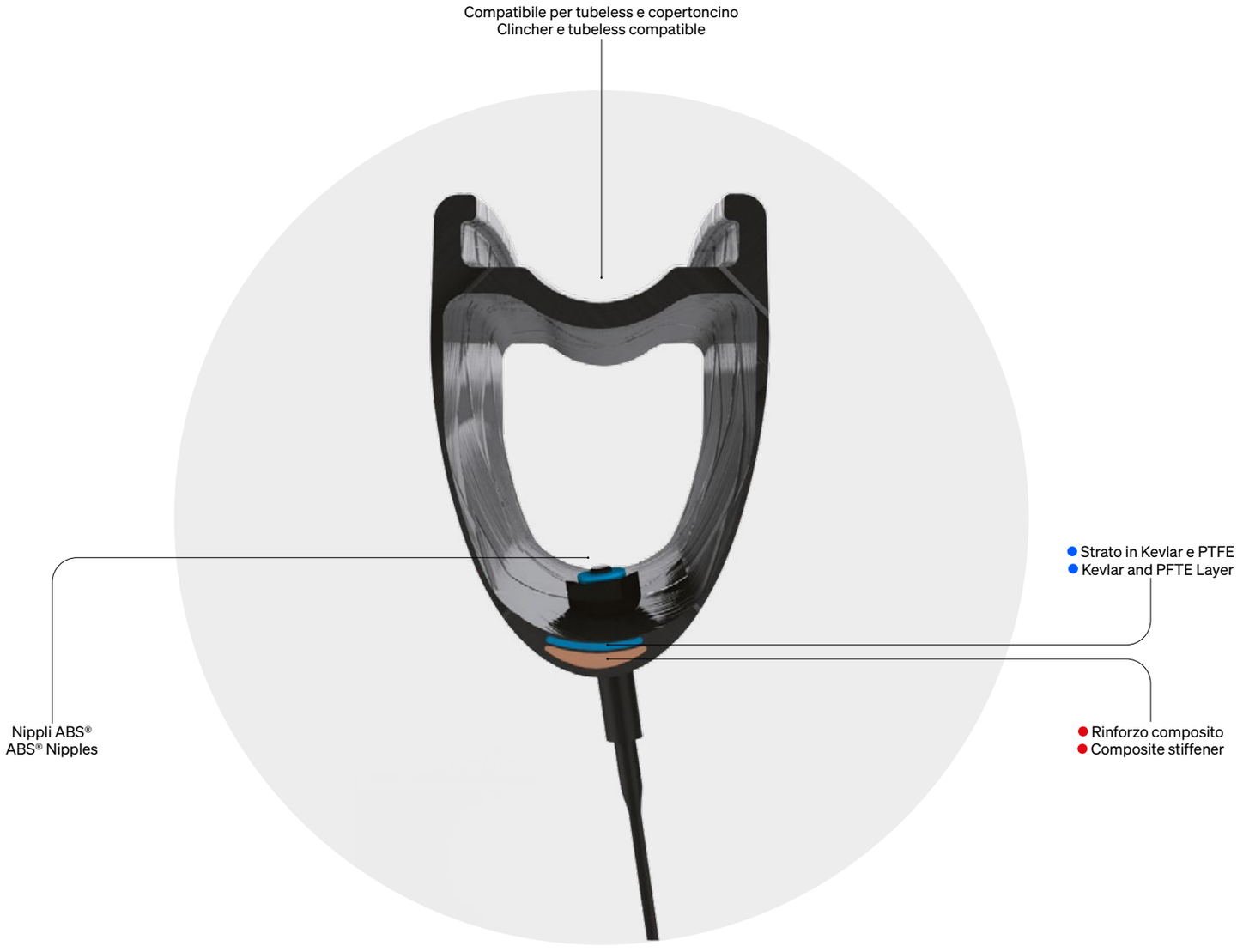

IT • Il nuovo cerchio da 23C è progettato per accogliere coperture a partire da 28 mm, migliorando l'aerodinamica complessiva del sistema ruota-pneumatico. I nippli esterni semplificano le operazioni di manutenzione e centratura, rendendo gli interventi rapidi e accessibili. Il sistema ABS® impedisce lo svitamento dei nippli e dei raggi, assicurando stabilità e affidabilità nel tempo. Inoltre, un sottile strato in kevlar e PTFE è stato applicato nella zona di contatto tra nipplo e cerchio: questo migliora la precisione nella regolazione dei nippli e ottimizza l'accoppiamento, riducendo l'attrito e l'usura nel tempo.

Ruota libera disponibile per:
→ Shimano
→ Sram XDR
→ Campagnolo
→ Campagnolo N3W

EN • The new 23C rim is designed to accommodate tires starting from 28 mm, improving the overall aerodynamics of the wheel-tire system. External nipples simplify maintenance and truing operations, making adjustments quick and accessible. The ABS® system prevents loosening of nipples and spokes, ensuring long-lasting stability and reliability. Additionally, a thin PTFE and Kevlar layer has been applied in the contact area between nipple and rim: this enhances nipple adjustment precision and optimizes the fit, reducing friction and wear over time.

Freehub available for:
→ Shimano
→ Sram XDR
→ Campagnolo
→ Campagnolo N3W

Tecnologia RFID
RFID Technology

Verifica dell'originalità ed estensione della garanzia.
SL5, SL7 e HERO RS sono dotate di un RFID univoco che funziona con qualsiasi smartphone utilizzando la tecnologia NFC. La tecnologia wireless NFC consente la connessione ad una pagina web sicura per la registrazione del prodotto.

Originality verification and warranty extension.
SL5, SL7 and HERO RS come with a unique RFID which works with any smartphone using the NFC technology. The NFC wireless technology allows the connection to a secure landing page for product registration.

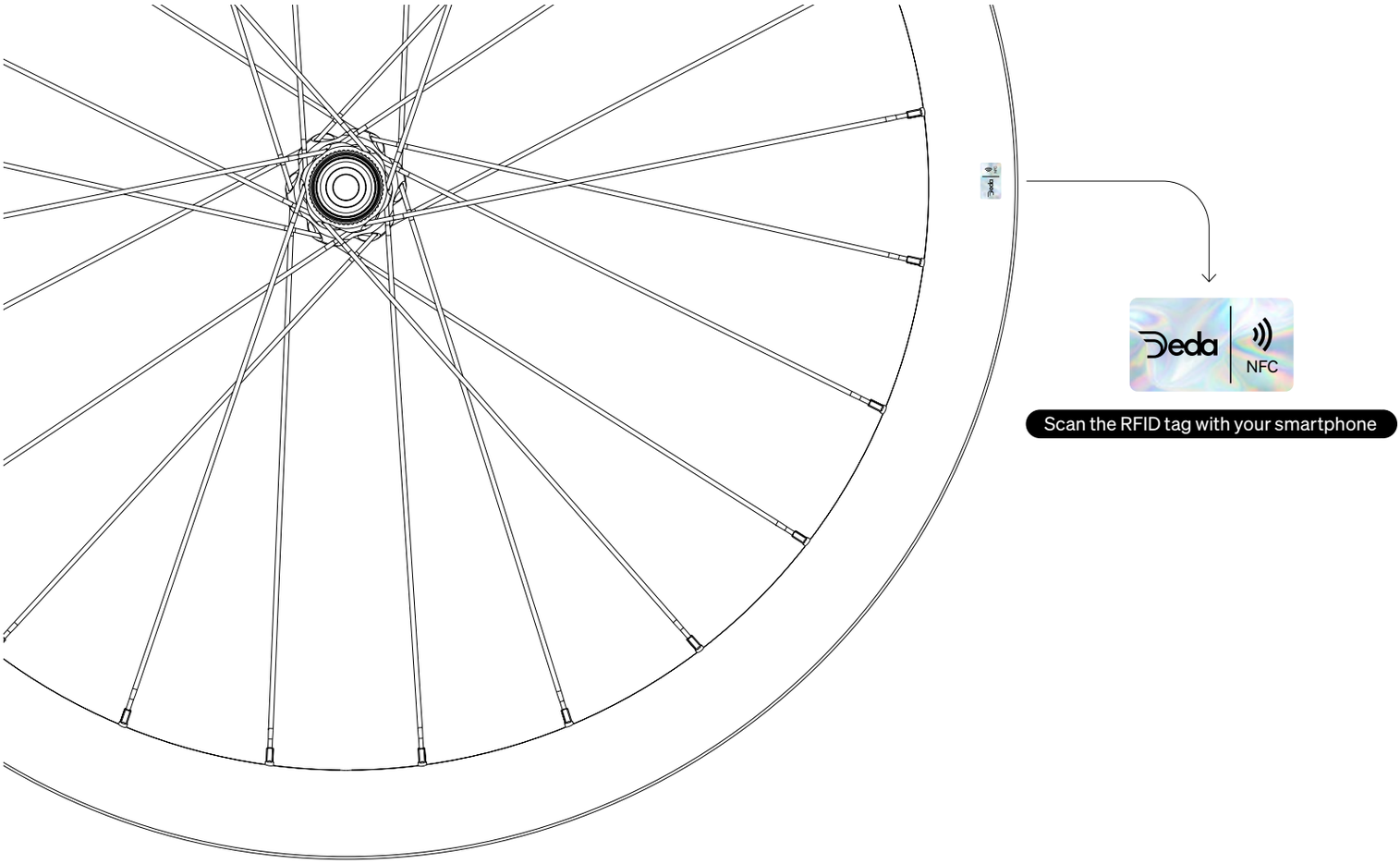

01

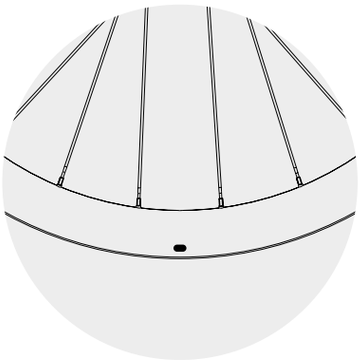

IT • Cerca il tag RFID presente sul cerchio della ruota.
EN • Find the RFID tag on wheel rim.

02

IT • Scansiona il tag RFID avvicinandoti col tuo smartphone.
EN • Scan the RFID tag approaching it with your smartphone.

03

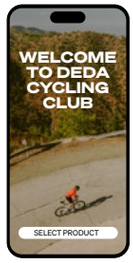

IT • Seleziona nel menu il tuo prodotto. Successivamente seleziona le voci "Estendi la garanzia" e "Verifica l'originalità".
EN • Select your product from the menu. Then, select the options "Extend the warranty" and "Check originality."

04

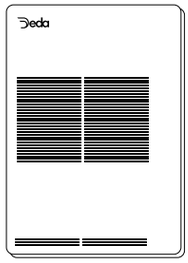

IT • Eseguita l'operazione riceverai una mail col certificato riportante diverse informazioni sul tuo prodotto.
EN • Once the operation is completed, you will receive an email with the certificate with relevant info.

HERO RS

Ride on Air

IT • Progettata per i ciclisti che aspirano alla performance,
Hero RS è una ruota lenticolare che unisce innovazione, efficienza e leggerezza.
Realizzata in fibra di carbonio UD ad alto modulo con costruzione cava,
offre il perfetto equilibrio tra rigidità laterale e assorbimento verticale,
per una guida aggressiva e un controllo assoluto.

EN • Engineered for cyclists who chase the performance,
the Hero RS rear wheel is a fusion of innovation, efficiency, and lightweight
performance. Built with high modulus UD carbon fiber in a hollow-core
construction, the Hero RS delivers the perfect balance of lateral stiffness
and vertical compliance for aggressive riding and ultimate control.

KASK
PIRELLI
PIRELLI

There's something magical about the rhythm of the road. Some days it's smooth, some days it's brutal — but somehow I always feel at home on my bike. MAGNUS CORT NIELSEN. UNO-X MOBILITY

HERO RS

Road

IT • Progettata per i ciclisti che aspirano alla performance, Hero RS è una ruota lenticolare che unisce innovazione, efficienza e leggerezza. Realizzata in fibra di carbonio UD ad alto modulo con costruzione cava, offre il perfetto equilibrio tra rigidità laterale e assorbimento verticale, per una guida aggressiva e un controllo assoluto. Grazie a una larghezza interna di 21 mm, si abbina perfettamente a pneumatici moderni più larghi, sia tubeless che copertoncino, garantendo aderenza superiore e scorrevolezza ottimale su strada e sterrato. Il profilo aerodinamico da 28 mm esterni riduce la resistenza all'aria senza compromettere la stabilità. Al centro della Hero RS troviamo un mozzo montato su cuscinetti in acciaio con un sistema a doppio cricchetto da 40 denti che assicura un innesto rapido e affidabile ad ogni colpo di pedale.

EN • Engineered for cyclists who chase the performance, the Hero RS rear wheel is a fusion of innovation, efficiency, and lightweight performance. Built with high modulus UD carbon fiber in a hollow-core construction, the Hero RS delivers the perfect balance of lateral stiffness and vertical compliance for aggressive riding and ultimate control. With a 21 mm internal rim width, it pairs flawlessly with modern high-volume tires, whether tubeless or clincher, offering superior grip and rolling efficiency across road and gravel terrains. The aerodynamic 28 mm external profile minimizes drag without compromising stability. At its heart, the Hero RS is equipped with a hub, rolling on steel bearings with 40-tooth dual ratchet system that ensures fast, reliable engagement under every pedal stroke.

HERO RS + RFID Technology

Materiale:
Struttura cava,
fibra di carbonio UD ad alto modulo
Finitura:
Carbonio UD
Larghezza del cerchio:
• 28 mm esterna
• 21 mm interna (ETRTO 622×21C)
Mozzo:
• Corpo mozzo in AL7075,
asse da 15 mm, cuscinetti in acciaio
• Sistema a 2 cricchetti da 40 denti
Attacco per disco freno:
Shimano Center Lock
Compatibilità per perno passante:
• Posteriore 12×142 mm
Corpetto ruota libera:
• Shimano, Sram XDR, Campagnolo N3W
Accessori inclusi:
Valvole tubeless, ghiera di bloccaggio Center Lock, lubrificante per i cricchetti del corpetto
Compatibilità pneumatici:
Clincher o tubeless-ready
Peso:
970 g

Material:
Hollow construction,
high modulus UD carbon fiber
Finish:
Carbon UD
Rim width:
• 28 mm external
• 21 mm internal (ETRTO 622×21C)
Hub:
• AL7075 hub body,
15 mm axle, steel bearings
• 40T 2-ratchet
Disc brake rotor:
Shimano Center Lock
Thru-axle compatibility:
• Rear 12×142 mm
Freehub:
• Shimano, Sram XDR, Campagnolo N3W
Accessories included:
Tubeless valves, Center Lock lockring, freehub ratchets lubricant.
Tire compatibility:
Clincher or tubeless-ready
Weight:
970 g

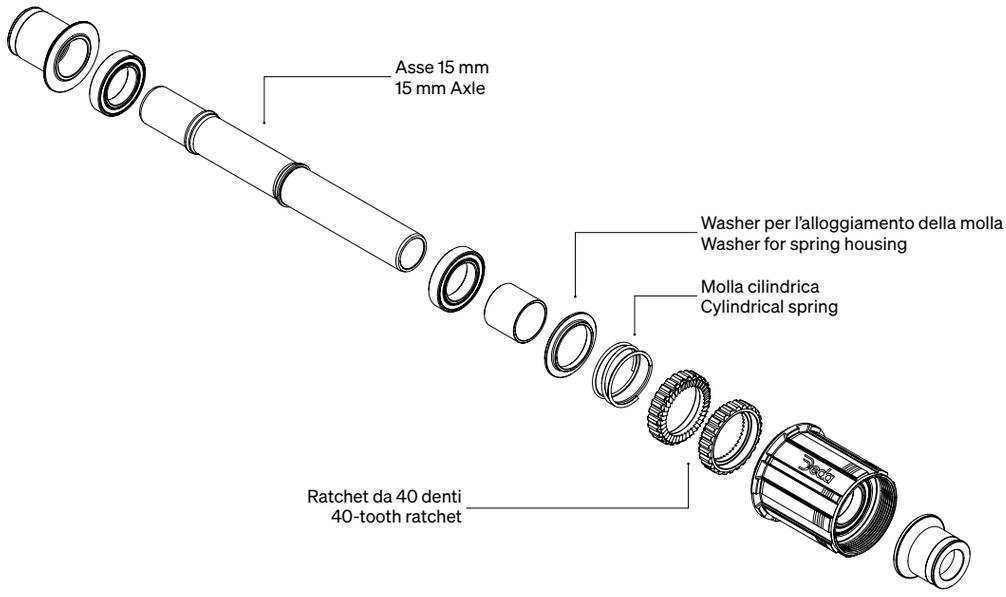

↓ Description	↓ Deda Part Code	↓ EAN13 Code
HERO RS DB, Rear disc wheel, Carbon, Tubeless-ready, Shimano	WDHERORSDB-SHI	8059493280064
HERO RS DB, Rear disc wheel, Carbon, Tubeless-ready, Sram XDR	WDHERORSDB-XDR	8059493280088

RS4

UCI Approved **Tubeless Ready**

Road

Le foto delle ruote mostrate con il disco montato sono solo per pura illustrazione. Le ruote sono vendute senza disco.
Wheels photos shown with disc brake rotor are for illustration purpose only. Wheels are sold without disc brake rotor.

IT • La nuova RS4DB definisce un nuovo standard per prestazioni e leggerezza di un set di ruote tubeless per freni a disco. Le ruote presentano un profilo del cerchio di 38 mm e una larghezza di 26 mm (19 mm interna) progettate per essere veloci e leggere su qualsiasi percorso. Il cerchio full carbon è stampato con una tecnologia che permette la distribuzione differenziata dello spessore. Il cerchio è rinforzato nella zona del nipplo e ha uno spessore ridotto fuori da questa zona. Questo porta un importante risparmio di peso sulla parte esterna per ridurre l'inerzia della ruota. I mozzi RS sono più aerodinamici e leggeri rispetto alla precedente generazione, per un risparmio totale di 80g. Il mozzo posteriore è dotato di un sistema a 2-ratchet per l'innesto della ruota libera. Un ratchet più piccolo si trova nel corpo ruota libera mentre il più grande si trova all'interno della flangia del mozzo per una migliore trasmissione della forza del pedale. Il design dei mozzi migliora notevolmente la scorrevolezza delle ruote per una velocità superiore. Il cerchio è costruito con la tecnologia tubeless ready per essere compatibile con pneumatici copertoncino o tubeless. I nippli interni migliorano l'aerodinamica, mentre il sistema ABS® autobloccante impedisce l'allentamento dei nippli e dei raggi. Disponibile per cassette Shimano, Sram XDR, Campagnolo, Campagnolo EKAR 13 V.

EN • The new RS4DB defines a new standard for performance and lightness of a tubeless disc brake wheelset. Wheels feature a 38mm rim profile and a 26 mm width (19mm internal) designed to be fast and light on any course. The full carbon rim is molded with a technology that allows the differentiated distribution of the thickness. The rim is reinforced in the nipple area and has reduced thickness out of the nipple area. This bring an important weight saving on the external part to reduce the inertia of the wheel. RS hubs are more aero and lighter compared to the previous generation, for a total weight saving of 80g. The rear hub features a 2-ratchet system for the freehub engagement. A smaller ratchet is located in the freehub body while the bigger is located inside the hub flange for a better pedal's force transmitting. The hubs design considerably improves the wheels smoothness for superior speed. The rim is built with the tubeless-ready technology to be compatible with clincher and tubeless tires. The internal nipples improve aerodynamics, while the self-locking ABS® system prevents the loosening of the nipples and spokes. Available for Shimano, Sram XDR, Campagnolo, Campagnolo EKAR 13 SP.

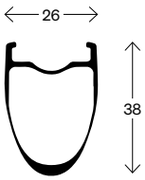

RS4 + RFID Technology

Materiale:
Struttura combinata in fibre di carbonio ad alto modulo UD e 3K con distribuzione differenziata dello spessore
Altezza cerchio:
38 mm
Larghezza cerchio:
• Esterna 26 mm
• Interna 19 mm (ETRTO 622×19C)
Raggi:
24 raggi, anteriore e posteriore, colore nero
Nippli:
Interni in alluminio hexa 5.5 mm, lunghezza 10 mm, self-locking abs®
Mozzi:
Corpo in alluminio 7075, asse ant. 17 mm, asse post. 15 mm, 20T ratchets, cuscinetti ceramici
Rotore del freno a disco:
Shimano center lock
Compatibilità perno:
• Anteriore 12×100 mm
• Posteriore 12×142 mm
Comapatibilità cassetta:
Shimano, Sram XDR, Campagnolo, Campagnolo EKAR 13 V
Accessori inclusi:
Borsa portaruote, nastro e valvole tubeless, ghiera center-lock, lubrificante corpetto ruota libera.
Compatibilità pneumatici:
Copertoncino o tubeless
Peso:
1.340 g

Material:
High modulus carbon fiber, ud and 3K combined structure with a differentiated distribution of the thickness
Rim height:
38 mm
Rim width:
• 26 mm external
• 19 mm internal (ETRTO 622×19C)
Spokes:
24 spoke, front and rear; black
Nipples:
Internal alloy hexa 5.5 mm, 10 mm length, self-locking abs®
Hub:
AL7075 hub body, 17 mm front axle, 15 mm rear axle, 20T ratchets, ceramic bearings
Disc brake rotor:
Shimano center lock
Thru-axle compatibility:
• Front 12×100 mm
• Rear 12×142 mm
Freehub:
Shimano, Sram XDR, Campagnolo, Campagnolo EKAR 13 SP
Accessories included:
Tubeless rim tape, tubeless valves, center-lock lockring, wheels bag, freehub ratchets lubricant.
Tire compatibility:
Clincher or tubeless-Ready
Weight:
1.340 g

↓ Description	↓ Deda Part Code	↓ EAN13 Code
RS4 DB, wheels, carbon, Tubeless-ready, 38mm, 19C, Shimano	WDRS4DB-SHI	8052783489000
RS4 DB, wheels, carbon, Tubeless-ready, 38mm, 19C, Campy	WDRS4DB-CA	8052783489017
RS4 DB, wheels, carbon, Tubeless-ready, 38mm, 19C, Sram XDR	WDRS4DB-XDR	8052783489024
RS4 DB, wheels, carbon, Tubeless-ready, 38mm, 19C, Campy N3W	WDRS4DB-N3W	8055774362481
RS4 DB, front wheel, carbon, Tubeless-ready, 38mm	WDRS4DB-F	8052783489031
RS4 DB, rear wheel, carbon, Tubeless-ready, 38mm, 19C, Shimano	WDRS4DB-RSHI	8052783489048
RS4 DB, rear wheel, carbon, Tubeless-ready, 38mm, 19C, Campy	WDRS4DB-RCA	8052783489055
RS4 DB, rear wheel, carbon, Tubeless-ready, 38mm, 19C, Sram XDR	WDRS4DB-RXDR	8052783489062
RS4 DB, rear wheel, carbon, Tubeless-ready, 38mm, 19C, Campy N3W	WDRS4DB-RN3W	8055774362498

RS3

UCI Approved **Tubeless Ready**

Road

Le foto delle ruote mostrate con il disco montato sono solo per pura illustrazione. Le ruote sono vendute senza disco.
Wheels photos shown with disc brake rotor are for illustration purpose only. Wheels are sold without disc brake rotor.

IT • Nuove RS3 in alluminio più leggere e performanti grazie all'upgrade con mozzi di derivazione RS. Sviluppate con i più esigenti teams e triatleti professionisti, le ruote sono perfette in gara quanto nelle fasi di allenamento. Cerchio in alluminio a giunto saldato da 30 mm costruito con la tecnologia tubeless-ready per essere compatibile con pneumatici tipo copertoncino e tubeless. I mozzi RS, qui equipaggiati in versione con cuscinetti acciaio, garantiscono una maggiore scorrevolezza e migliore trasmissione della forza del pedale. Disponibili in finitura POB (Polish on black).

EN • New RS3 alloy wheels are lighter and better performing thanks to the RS hubs upgrade. Developed with demanding professional teams and triathletes, these wheels are perfect in races and training phases. The 30 mm welded rim is built with the tubeless-ready technology to be compatible with clincher and tubeless tires. The RS hubs, here equipped with steel bearings, considerably improves the wheels smoothness and guarantees a better pedal's force transmitting. Available in POB (Polish on black) finish.

Materiale:
Alluminio 6061, saldato
Altezza cerchio:
30 mm
Larghezza cerchio:
• Esterna 23 mm
• Interna 19 mm (ETRTO 622×19C)
Raggi:
24 raggi, anteriore e posteriore, colore nero
Nippli:
Nipplo autobloccante abs®, alluminio, 15 mm, colore nero
Mozzi:
Corpo in alluminio 7075, asse ant. 17 mm, asse post. 15 mm, 20T ratchets, cuscinetti acciaio
Rotore del freno a disco:
Shimano center lock
Compatibilità perno:
• Anteriore 12×100 mm
• Posteriore 12×142 mm
Compatibilità cassetta:
Shimano, Sram XDR, Campagnolo
Accessori inclusi:
Nastro e valvole tubeless, ghiera center-lock, lubrificante corpetto ruota libera.
Compatibilità pneumatici:
Copertoncino o tubeless; minima larghezza raccomandata 25 mm
Peso:
1.640 g

Material:
Alloy 6061, welded
Rim height:
30 mm
Rim width:
• 23 mm external
• 19 mm internal (ETRTO 622×19C)
Spokes:
24 spoke, front and rear; black
Nipples:
Self-locking abs® nipples, aluminum, 15 mm length, black
Hub:
AL7075 hub body, 17 mm front axle, 15 mm rear axle, 20T ratchets, steel bearings
Disc brake rotor:
Shimano center lock
Thru-axle compatibility:
• Front 12×100 mm
• Rear 12×142 mm
Freehub:
Shimano, Sram XDR, Campagnolo
Accessories included:
Tubeless rim tape, tubeless valves, center-lock lockring, freehub ratchets lubricant.
Tire compatibility:
Clincher or tubeless tire; minimum recommended size 25 mm
Weight:
1.640 g

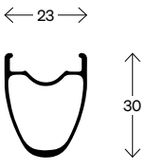

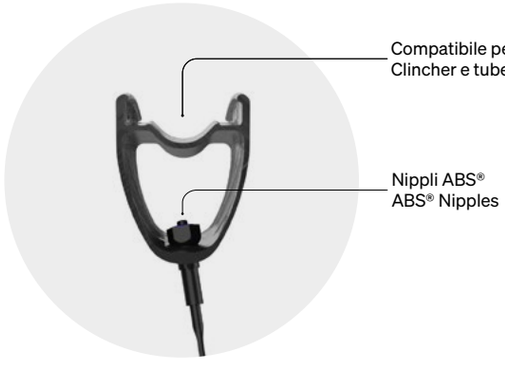

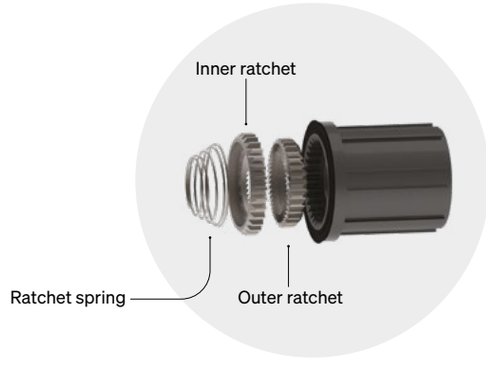

↓ Description	↓ Deda Part Code	↓ EAN13 Code
RS3 DB, wheels, aluminium, Tubeless-ready, 30mm, 19C, Shimano	WDRS3DBAL-SHI	8055774362146
RS3 DB, wheels, aluminium, Tubeless-ready, 30mm, 19C, Campy	WDRS3DBAL-CA	8055774362139
RS3 DB, wheels, aluminium, Tubeless-ready, 30mm, 19C, Sram XDR	WDRS3DBAL-XDR	8055774362153
RS3 DB, front wheel, aluminium, Tubeless-ready, 38mm	WDRS3DBAL-F	8055774362160
RS3 DB, rear wheel, aluminium, Tubeless-ready, 38mm, Shimano	WDRS3DBAL-RSHI	8055774362184
RS3 DB, rear wheel, aluminium, Tubeless-ready, 38mm, Campy	WDRS3DBAL-RCA	8055774362177
RS3 DB, rear wheel, aluminium, Tubeless-ready, 38mm, Sram XDR	WDRS3DBAL-RXDR	8055774362191

SL3

UCI Approved

Road Gravel

Le foto delle ruote mostrate con il disco montato sono solo per pura illustrazione. Le ruote sono vendute senza disco.
Wheels photos shown with disc brake rotor are for illustration purpose only. Wheels are sold without disc brake rotor.

IT • Le nuove ruote SL3 tubolari per disc brake ancora più leggere e performanti grazie all'upgrade con mozzi di derivazione RS. Peso completo del set poco sopra i 1.200 grammi. Le ruote presentano un profilo del cerchio di 38 mm e una larghezza di 26 mm progettate per un miglior supporto al tubolare migliorando allo stesso tempo stabilità e guidabilità.La raggiatura a 24 raggi si traduce in alta rigidità. I mozzi RS, qui equipaggiati in versione con cuscinetti acciaio, garantiscono una maggiore scorrevolezza e migliore trasmissione della forza del pedale. È la scelta perfetta anche su qualsiasi tipo di percorso, anche su strade bianche. Disponibili in finitura Team.

EN • New SL3 tubular disc brake are lighter and better performing wheels thanks to the RS hubs upgrade. Total weight close to 1.200 grams. The wheels feature a 38 mm rim depth combined to a 26 mm wide section to provide a better support to the tire and reduce the rolling resistance, increasing at the same time the wheel strength. 24 Spokes count provide high stiffness at a very low weight level. The RS hubs, here equipped with steel bearings, considerably improves the wheels smoothness and guarantees a better pedal's force transmitting.The perfect choice for any kind of course and road conditions, including gravel roads. Available in Team finish.

Materiale:
Struttura combinata in fibre di carbonio ad alto modulo UD e 3K
Altezza cerchio:
38 mm
Larghezza cerchio:
26 mm esterno
Raggi:
24 raggi, anteriore e posteriore; neri
Nippli:
Nipplo autobloccante abs®, alluminio, 15 mm, colore nero
Mozzi:
Corpo in alluminio 7075, asse ant. 17 mm, asse post. 15 mm, 20T ratchets, cuscinetti acciaio
Rotore freno a disco:
Shimano center lock
Compatibilità perno:
• Anteriore 12×100 mm
• Posteriore 12×142 mm
Compatibilità cassetta:
Shimano, Sram XDR, Campagnolo, Campagnolo EKAR 13V
Accessori inclusi:
Ghiera center-lock, lubrificante corpetto ruota libera.
Compatibilità pneumatici:
Solo per tubolare; minima larghezza raccomandata 25 mm
Peso:
1.300 g

Material:
High modulus carbon fiber, UD & 3K combined structure
Rim height:
38 mm
Rim width:
26 mm external
Spokes:
24 spoke, front and rear; black
Nipples:
Self-locking abs® nipples, aluminum, 15 mm length, black
Hub:
AL7075 hub body, 17 mm front axle, 15 mm rear axle, 20T ratchets, steel bearings.
Disc brake rotor:
Shimano center lock
Thru-axle compatibility:
• Front 12×100 mm
• Rear 12×142 mm
Freehub:
Shimano, Sram XDR, Campagnolo, Campagnolo EKAR 13 SP
Accessories included:
Center-lock lockring, freehub ratchets lubricant.
Tire compatibility:
Tubular only; minimum recommended size 25 mm
Weight:
1.300 g

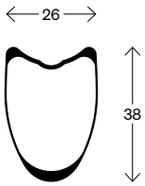

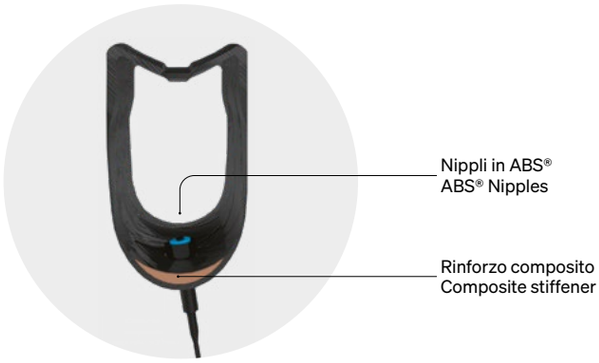

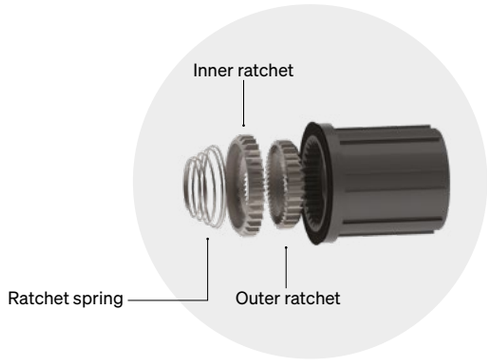

↓ Description	↓ Deda Part Code	↓ EAN13 Code
SL3 TDB Carbon Tubular Wheelset, 38 mm, TEAM finish, Shimano	WDS3TDB-SHI-TEAM	8055774364805
SL3 TDB Carbon Tubular Wheelset, 38 mm, TEAM finish, Campagnolo	WDS3TDB-CA-TEAM	8055774364812
SL3 TDB Carbon Tubular Wheelset, 38 mm, TEAM finish, Campy N3W 13SP	WDS3TDB-N3W-TEAM	8055774364829
SL3 TDB Carbon Tubular Wheelset, 38 mm, TEAM finish, Sram XDR	WDS3TDB-XDR-TEAM	8055774364836
SL3 TDB Carbon Tubular Front Wheel, 38 mm, TEAM finish	WDS3TDB-F-TEAM	8055774364843
SL3 TDB Carbon Tubular Rear Wheel, 38 mm, TEAM finish, Shimano	WDS3TDB-RSHI-TEAM	8055774364850
SL3 TDB Carbon Tubular Rear Wheel, 38 mm, TEAM finish, Campagnolo	WDS3TDB-RCA-TEAM	8055774364867
SL3 TDB Carbon Tubular Rear Wheel, 38 mm, TEAM finish, Campy N3W 13SP	WDS3TDB-RN3W-TEAM	8055774364874
SL3 TDB Carbon Tubular Rear Wheel, 38 mm, TEAM finish, Sram XDR	WDS3TDB-RXDR-TEAM	8055774364881

DB140 & DB160 DISC BRAKE ROTOR

Road Gravel

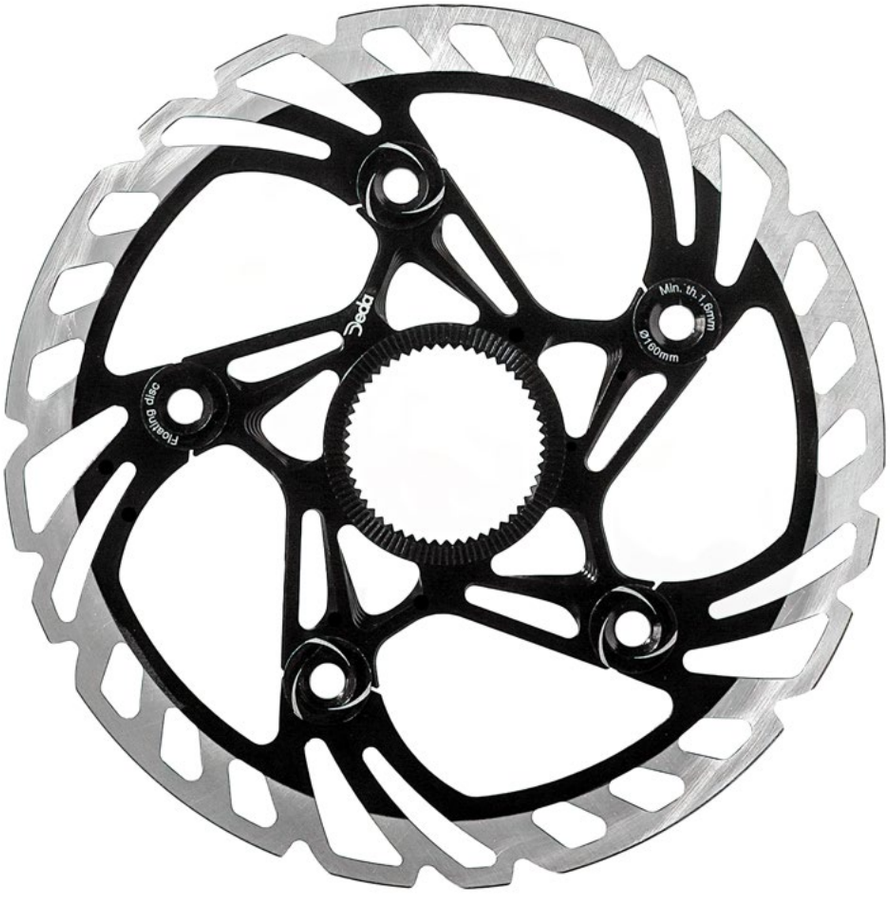

IT • Il nuovo rotore Deda Disc Brake è una scelta eccellente per chi cerca prestazioni elevate sia su strada che su terreni ghiaiosi. La combinazione di materiali di alta qualità, come l'acciaio inossidabile per il disco esterno e l'alluminio per lo spider, garantiscono durata e leggerezza. Bordi arrotondati e i rivetti flottanti con rondelle elastiche coniche, consentono performance di frenata e dissipazione del calore, cruciali soprattutto in situazioni di guida impegnative.

EN • High-performance rotor suitable for road and gravel riding. With its stainless steel outer disc and aluminum spider construction, along with features like rounded edges, floating rivets and conical spring washers, new Deda Disc Brake rotor is designed for optimal braking performance, durability, and heat dissipation.

Materiale:
Costruzione in 2 pezzi
• Disco esterno in acciaio inossidabile (SUS-410 dal Giappone)
• Ragno in alluminio 7075
Rotore:
Design con bordi arrotondati 5 rivetti flottanti con rondelle elastiche coniche
Spessore del disco:
1,8 mm (limite massimo di usura 1,6 mm)
Compatibilità mozzo:
Shimano center lock
Taglie:
Ø 140 e Ø 160 mm
Peso:
• 110 g (140 mm)
• 130 g (160 mm)
Note: raccomandato per uso con pastiglie freno organiche.

Material:
2-piece construction
• Stainless steel outer disc (Japan SUS-410)
• 7075 aluminum spider
Rotor:
Rounded edge design 5 floating rivets with conical spring washers
Disc thickness:
1.8 mm (max wear limit 1.6 mm)
Hub compatibility:
Shimano center lock
Sizes:
Ø 140 and Ø 160 mm
Weight:
• 110 g (140 mm)
• 130 g (160 mm)
Notes: recommended to use with organic brake pads.

↓ Description	↓ Deda Part Code	↓ EAN13 Code
DB140, disc brake rotor, Ø 140 mm, flottante, pista steel, spider aluminium	WD-DB140	8055774365017
DB160, disc brake rotor, Ø 160 mm, flottante, pista steel, spider aluminium	WD-DB160	8055774365024

Caratteristiche principali
Main features

Analisi FEM
• Nello sviluppo dei dischi è stata largamente utilizzata l'analisi FEM (Finite Element Method) per ricercare e determinare la forma più efficiente, che minimizzasse il peso del disco garantendo le massimi prestazioni di frenata.

FEM analysis
• In the development of the disc rotor, FEM analysis (Finite Element Method) was extensively used to search for the most efficient shape that would minimise the weight of the disc while ensuring maximum braking performance.

Vantaggi del disco flottante:
Il disco flottante è realizzato in due pezzi, pista frenante e ragno, offrendo diversi vantaggi rispetto ad un tradizionale disco a pezzo unico:
1 • Migliore riposta al calore
2 • Maggiore potenza frenante
3 • Migliore dissipazione del calore

Floating disc advantages:
The floating disc 2-piece construction offers several advantages over traditional one-piece disc rotors:
1 • Better Response to Heat
2 • Greater Braking Power
3 • Improved Heat Dissipation

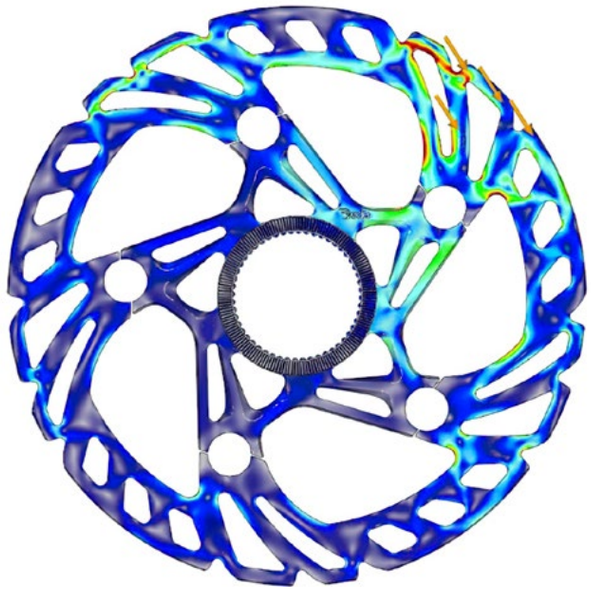

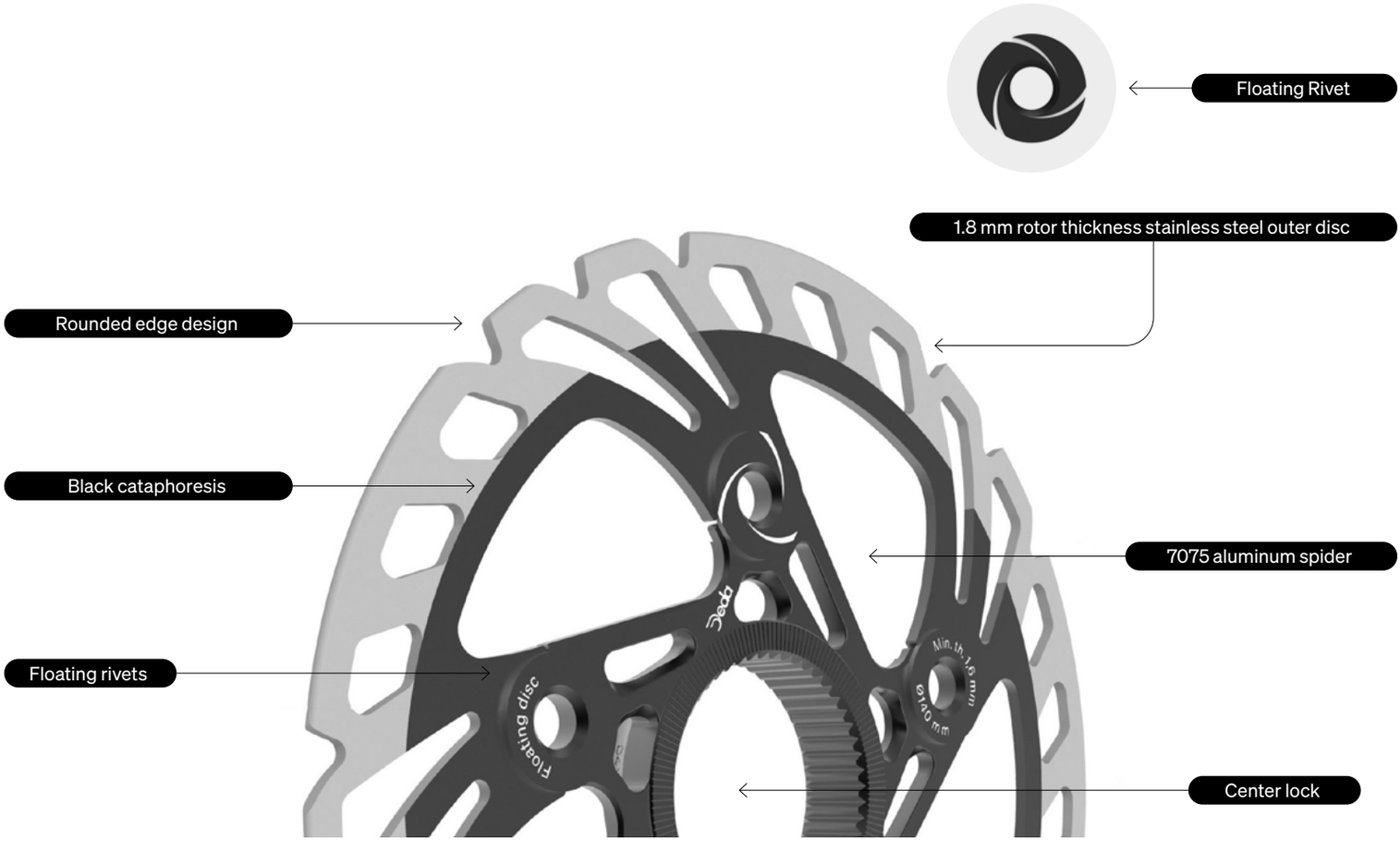

Accessori ruote
Wheels accessories

Lubrificante ruota libera
Freehub ratchets lubricant

IT • Grasso lubrificante ruota libera per sistema Ratchet.

EN • Freehub lubrificant grease for Ratchet system.

Nastro tubeless
Tubeless tape

IT • Rotolo di nastro tubeless da 11 metri. Disponibile in larghezza 21 e 25 mm.

EN • 11 Meters tubeless tape roll. Available in 21 or 25 mm length.

Ghiera center-lock
Center-lock lockring

IT • Ghiera in alluminio per chiusura disco con mozzi center lock. Adatto a perni passanti da 12 e 15 mm.

EN • Center-lock lockring for disc brake hubs. Suitable for 12 and 15 mm thru axle.

Valvole tubeless
Tubeless Valves

IT • Valvole tubeless ultraleggere in alluminio con cuore removibile. Disponibili in lunghezza 60 e 80 mm.

EN • Ultralight tubeless valves with removable valve core. Available in 60 and 80 mm length.

Borsa porta ruote
Wheels bag

IT • Borsa porta ruote (per 1 set) in nylon con imbottiture interne per un trasporto sicuro.

EN • Wheels bag protection (for 1 set) for a safe transport, includes special padding.

Valigetta ricambi ruote
Wheels spare parts box

IT • Valigetta di ricambi ruote destinata a negozi e distributori. Completa di tutti i ricambi per una efficiente manutenzione e rapida sostituzione. Include raggi, cuscinetti, perni, corpetti ruota libera per ogni modello di ruota Deda. Due versioni, per ruote rim brake e disc brake.

EN • Wheels spare parts box is the perfect tool for dealers and distributors. The box includes all spare parts for an efficient service and fast replacement of spokes, bearings, axles, freehub bodies and more. Available in two versions, for rim brake and disc brake.

↓ Description	↓ Deda Part Code	↓ EAN13 Code
Deda Freehub Ratchets Lubricant	WDRATCHET-LUB	8055774361682
Wheels bag, for 1 set	WD43N	8059265683888
Wheels spare parts box – RS and SL series	DWSPBOXRSDB	8055774360043
Kit tubeless tape, 25 mm, roll 11 m, black	WDT25	8052783487884
Kit tubeless tape, 21 mm, roll 11 m, black	WDT21	8052783487792
Lockring for center-lock, Thru Axle 12 & 15 mm	WDLOCKRING	8052783487815
Kit tubeless valve, 60 mm, 1 kit=2 pcs, includes tool key	WDTV1	8052783487839
Kit tubeless valve, 80 mm, 1 kit=2 pcs, includes tool key	WDTV2	8052783487846

LABORAL
Kutxa
EUSKADI
BASQUE COUNTRY
45
LABORAL
Kutxa
mendiz
Deda
Deda

ALANERA RS

IT • Alanera RS rappresenta l'apice della tecnologia applicata ai manubri integrati per bici da corsa e gravel, offrendo una combinazione di aerodinamica, comfort e compatibilità con accessori d'alta gamma. Nata dalla solida eredità del primo manubrio integrato vincitore del Tour de France, Alanera RS è pronta a ridefinire i limiti delle prestazioni nel ciclismo moderno.

EN • Alanera RS represents a pinnacle in handlebar technology, combining aerodynamics, comfort and compatibility with cutting-edge accessories to meet the demands of professional cyclists and enthusiasts alike. Born from the legacy of the first integrated handlebars to triumph at the Tour de France, the Alanera RS pushes the boundaries even further.

Riding my bike is more than just racing. It's about connecting people and the incredible opportunity to connect two points on the map. It is freedom beyond the horizon. SEBASTIAN BREUER

Integrated Top Cap (No gap)
Deda
Developed and tested
in Milano Wind Tunnel
RHM EVO • Rest Hand Movement

Road Gravel

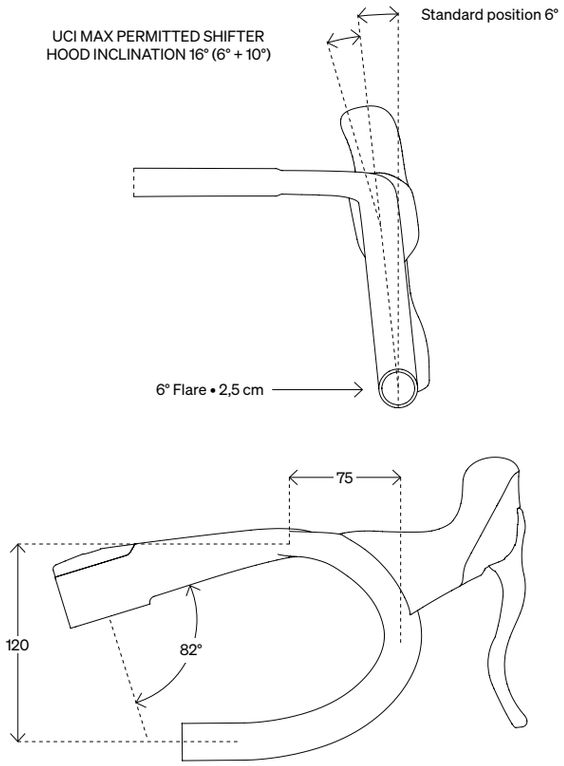

Forma:
RHM-EVO
Materiale:
Monoscocca carbonio fibra UD / 3K
Canotto forcella:
1 1/8" (28,6 mm)
Altezza morsetto:
43,5 mm
Angolo:
82°
Reach:
75 mm
Drop:
120 mm
Flare:
6° (+2,5 cm)
Hardware:
Titanio, PVD nero
Misure:
Vedi pagina taglie
Peso:
340 g (110×42)
Accessori inclusi:
Top cap aerodinamico, spessori serie sterzo e top cover DCR per tubo sterzo da 56 mm e 46 mm. Supporto portacomputer compatibile con Garmin®, Wahoo®, Bryton® e GoPro®.
Note:
Compatibile solo per passaggio cavi completamente interno (2 cavi freno e cavo cambio elettrico).

Shape:
RHM-EVO
Material:
Monocoque costruction UD / 3K carbon fiber
Fork steerer:
1 1/8" (28,6 mm)
Clamp Height:
43,5 mm
Angle:
82°
Reach:
75 mm
Drop:
120 mm
Flare:
6° (+2,5 cm)
Hardware:
Titanium, black PVD
Sizes:
See sizes page
Weight:
340 g (110×42)
Included accessories:
Aero topcap, headset spacers and DCR topcover for headtube 56 mm & 46 mm. Computer bike mount for Garmin, Wahoo, Bryton & GoPro.
Notes:
Compatible only with full internal cable routing (2 brake cables & electric shifting wire).

↓ Description	↓ Deda Part Code	↓ EAN13 Code	↓ Deda OEM Part Code	↓ EAN13 OEM Part Code
Alanera RS integrated handlebar, 80×38, RHM-EVO, 6° flare, 82°	ALARS080X38	8055774367370	ALARS080X38X	8055774367387
Alanera RS Integrated Handlebar, 80×40, RHM-EVO, 6° flare, 82°	ALARS080X40	8055774365147	ALARS080X40X	8055774365154
Alanera RS Integrated Handlebar, 80×42, RHM-EVO, 6° flare, 82°	ALARS080X42	8055774365277	ALARS080X42X	8055774365284
Alanera RS integrated handlebar, 80×44, RHM-EVO, 6° flare, 82°	ALARS080X44	8055774365413	ALARS080X44X	8055774365420
Alanera RS integrated handlebar, 90×38, RHM-EVO, 6° flare, 82°	ALARS090X38	8055774367394	ALARS090X38X	8055774367400
Alanera RS Integrated Handlebar, 90×40, RHM-EVO, 6° flare, 82°	ALARS090X40	8055774365161	ALARS090X40X	8055774365178
Alanera RS Integrated Handlebar, 90×42, RHM-EVO, 6° flare, 82°	ALARS090X42	8055774365291	ALARS090X42X	8055774365307
Alanera RS Integrated Handlebar, 90×44, RHM-EVO, 6° flare, 82°	ALARS090X44	8055774365437	ALARS090X44X	8055774365444
Alanera RS integrated handlebar, 100×38, RHM-EVO, 6° flare, 82°	ALARS100X38	8055774367417	ALARS100X38X	8055774367424
Alanera RS Integrated Handlebar, 100×40, RHM-EVO, 6° flare, 82°	ALARS100X40	8055774365192	ALARS100X40X	8055774365185
Alanera RS Integrated Handlebar, 100×42, RHM-EVO, 6° flare, 82°	ALARS100X42	8055774365314	ALARS100X42X	8055774365321
Alanera RS Integrated Handlebar, 100×44, RHM-EVO, 6° flare, 82°	ALARS100X44	8055774365451	ALARS100X44X	8055774365468
Alanera RS integrated handlebar, 110×38, RHM-EVO, 6° flare, 82°	ALARS110X38	8055774367448	ALARS110X38X	8055774367431
Alanera RS Integrated Handlebar, 110×40, RHM-EVO, 6° flare, 82°	ALARS110X40	8055774365208	ALARS110X40X	8055774365215
Alanera RS Integrated Handlebar, 110×42, RHM-EVO, 6° flare, 82°	ALARS110X42	8055774365338	ALARS110X42X	8055774365345
Alanera RS Integrated Handlebar, 110×44, RHM-EVO, 6° flare, 82°	ALARS110X44	8055774365475	ALARS110X44X	8055774365482
Alanera RS integrated handlebar, 120×38, RHM-EVO, 6° flare, 82°	ALARS120X38	8055774367455	ALARS120X38X	8055774367462
Alanera RS Integrated Handlebar, 120×40, RHM-EVO, 6° flare, 82°	ALARS120X40	8055774365222	ALARS120X40X	8055774365239
Alanera RS Integrated Handlebar, 120×42, RHM-EVO, 6° flare, 82°	ALARS120X42	8055774365352	ALARS120X42X	8055774365369
Alanera RS Integrated Handlebar, 120×44, RHM-EVO, 6° flare, 82°	ALARS120X44	8055774365499	ALARS120X44X	8055774365505
Alanera RS integrated handlebar, 130×38, RHM-EVO, 6° flare, 82°	ALARS130X38	8055774367479	ALARS130X38X	8055774367486
Alanera RS Integrated Handlebar, 130×40, RHM-EVO, 6° flare, 82°	ALARS130X40	8055774365246	ALARS130X40X	8055774365253
Alanera RS Integrated Handlebar, 130×42, RHM-EVO, 6° flare, 82°	ALARS130X42	8055774365376	ALARS130X42X	8055774365383
Alanera RS Integrated Handlebar, 130×44, RHM-EVO, 6° flare, 82°	ALARS130X44	8055774365512	ALARS130X44X	8055774365529
Alanera RS integrated handlebar, 140×38, RHM-EVO, 6° flare, 82°	ALARS140X38	8055774367493	ALARS140X38X	8055774367509
Alanera RS Integrated Handlebar, 140×40, RHM-EVO, 6° flare, 82°	ALARS140X40	8055774365550	ALARS140X40X	8055774365260
Alanera RS Integrated Handlebar, 140×42, RHM-EVO, 6° flare, 82°	ALARS140X42	8055774365390	ALARS140X42X	8055774365406
Alanera RS Integrated Handlebar, 140×44, RHM-EVO, 6° flare, 82°	ALARS140X44	8055774365536	ALARS140X44X	8055774365543

Alanera RS Taglie
Alanera RS Sizes

Larghezza • La larghezza dell'Alanera RS, come per tutti i manubri Deda, si misura dal bordo esterno della sezione morsetto leva al bordo esterno dell'altra sezione morsetto leva.

Width • Alanera RS, like all Deda bars, is measured from the outside edge of one hood to the outside edge of the other hood.

Lunghezza • La lunghezza del manubrio Alanera RS è misurata come da schema seguente. Se sostituite un attacco Deda con angolo 82° con una curva Alanera RS, mantenendo la stessa lunghezza dell'attacco, non noterete una differenza significativa nella posizione di guida. Questo perché Alanera RS è progettata per replicare le geometrie e le misurazioni degli attacchi Deda tradizionali, garantendo una transizione senza variazioni notevoli nella postura in sella.

Length • The stem length of the Alanera RS is determined as shown in the image below. If you replace a Deda stem with an 82° angle with an Alanera RS stem of the same length, you will not notice a significant difference in your racing position. This is because the geometry of the Alanera RS is designed to maintain a similar fit and position, even when switching from a traditional stem to the integrated setup.

WO	**W1**	**Lunghezza attacco (LO)** Stem Ext. (L0)	**Su ordinazione** On demand
38	40,5	80 • 90 • 100 • 110 mm	120 • 130 • 140 mm
40	42,5	80 • 90 • 100 • 110 mm	120 • 130 • 140 mm
42	44,5	90 • 100 • 110 • 120 • 130 mm	80 • 140 mm
44	46,5	100 • 110 • 120 • 130 mm	80 • 90 • 140 mm

WO/W1 Misurata esterno-esterno WO/W1 Measured outside-outside

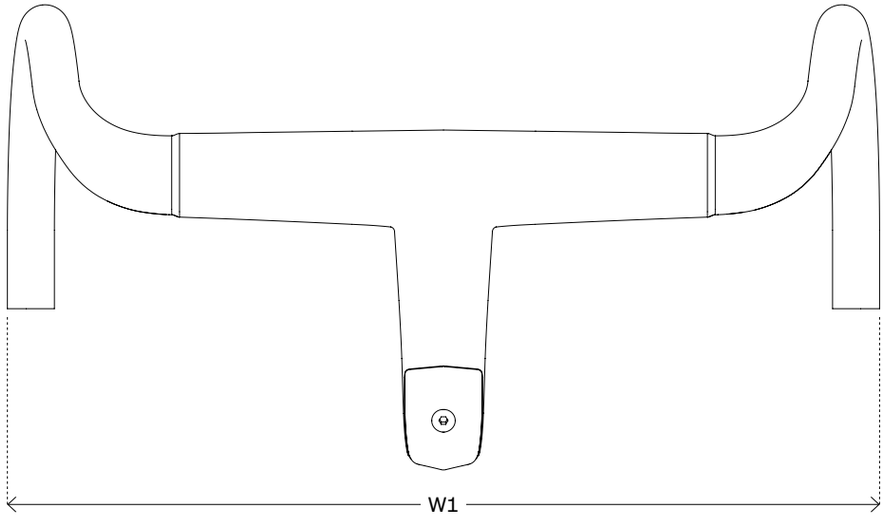

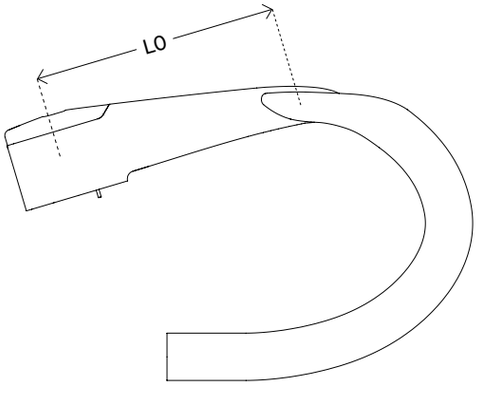

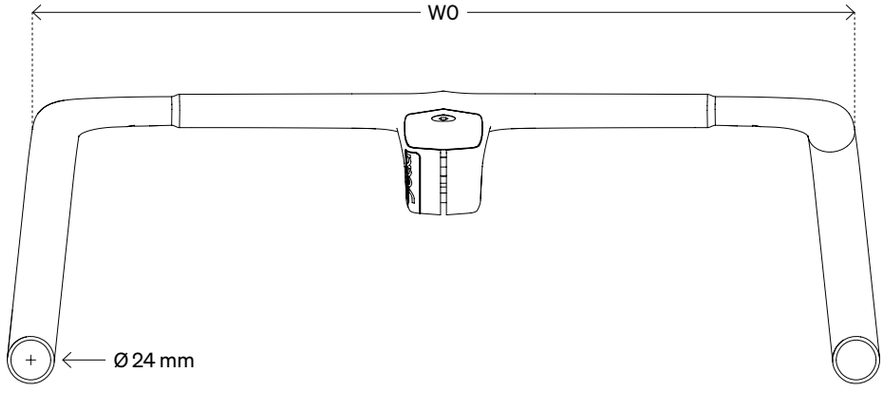

Standert
Standert

Alanera RS Computer Mount
Alanera RS Computer Mount

Materiale:
Alluminio 6061, anodizzato nero
Inserti:
• Garmin® o Wahoo®
• Bryton®
• GoPro®
Peso:
36 g
Compatibilità:
Garmin® (serie 1000, 800 & 500), Wahoo® (Elemnt Bolt, Roam & Ace), Bryton® e GoPro® camera/luce
Nota:
Compatibile solo con Alanera RS
Peso massimo consentito:
350 g (es. 150 g computer + 200 g luce)

Material:
6061 aluminum, black anodized
Replaceable inserts:
• Garmin® or Wahoo®
• Bryton®
• GoPro®
Weight:
36 g
Compatibility:
Garmin® (1000, 800 & 500 series), Wahoo® (Elemnt Bolt, Roam & Ace), Bryton® and GoPro® camera/light system
Notes:
Compatible with Alanera RS only
Max load:
350 g (i.e. 150 g computer + 200 g light).

↓ Description	↓ Deda Part Code	↓ EAN13 Code
Computer mount ALANERA RS, aluminium 6061, per Garmin®, Wahoo®, Bryton®, GoPro®	ALAMOUNTRS	8055774366045

Alanera RS VS Alanera
Alanera RS VS Alanera

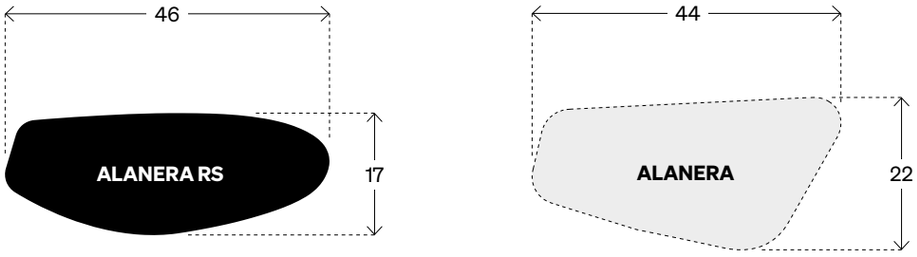

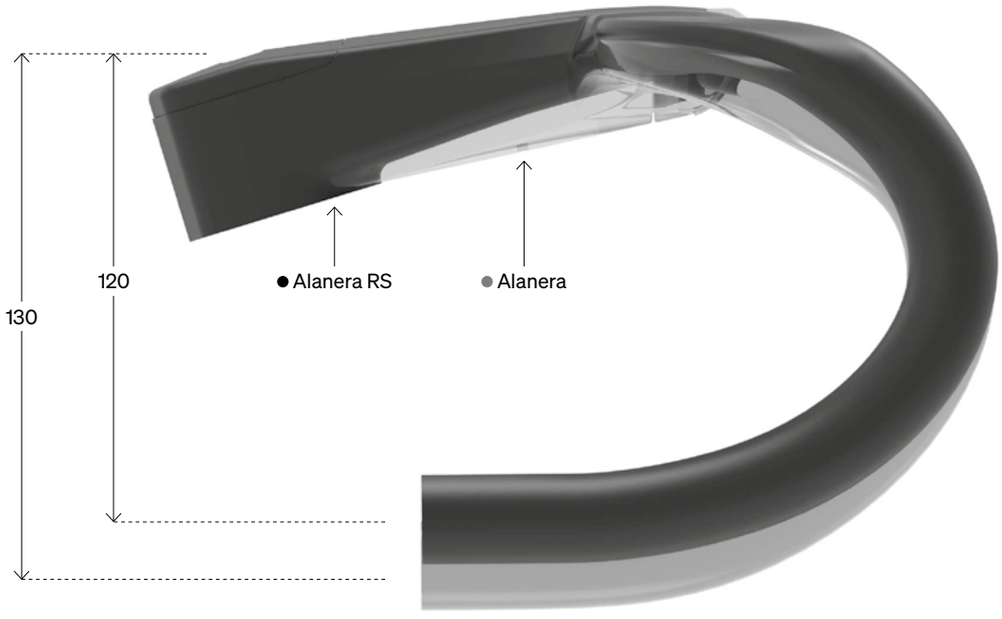

IT • Alanera RS rappresenta un'evoluzione della precedente geometria, ottimizzata e affinata per prestazioni e comfort ancora maggiori.

Vantaggi
• Ergonomia migliorata nella parte superiore e forma RHM-EVO
• La sezione trasversale superiore presenta un design più aerodinamico

Forma RHM-EVO
Con un drop più compatto di 120 mm, i ciclisti possono mantenere una posizione bassa per periodi più lunghi, migliorando il comfort e l'aerodinamica.

EN • Alanera RS represents an evolution of the previous geometry, optimized and refined for even greater performance and comfort.

Advantages:
• Improved ergonomics at the top & RHM-EVO shape
• Top cross-section features a more aero design

RHM-EVO Shape
With a 120 mm more compact drop, riders can maintain a low position for longer time, enhancing comfort and aerodynamics.

POLITECNICO × DEDA
POLITECNICO × DEDA

AERODINAMICA OTTIMIZZATA CON SIMULAZIONE CFD
Deda e la sua divisione Servizio Corse hanno unito le forze con un'eccellenza italiana come il Politecnico di Milano e i tecnici della Galleria del Vento - Laboratorio di Aerodinamica, per offrire ai ciclisti che scelgono Deda la garanzia di utilizzare i migliori prodotti possibili, sviluppati e testati approfonditamente in galleria del vento per massimizzare comfort e aerodinamica.

AERODYNAMICS OPTIMIZED WITH CFD SIMULATION
Deda and its Servizio Corse division joined forces with an Italian excellence such as the Politecnico di Milano University and the technicians of its Wind Tunnel -Aerodynamics Laboratory to offer cyclists who choose Deda the assurance that they are using the best possible products, developed and extensively tested in the wind tunnel to maximize comfort and aerodynamics.

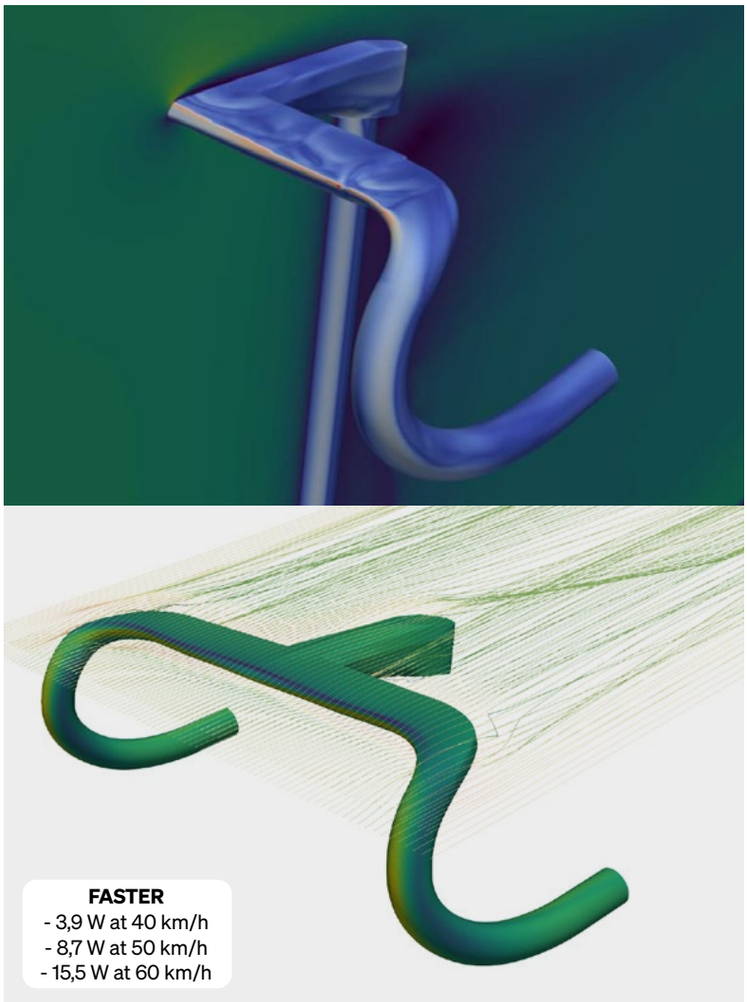

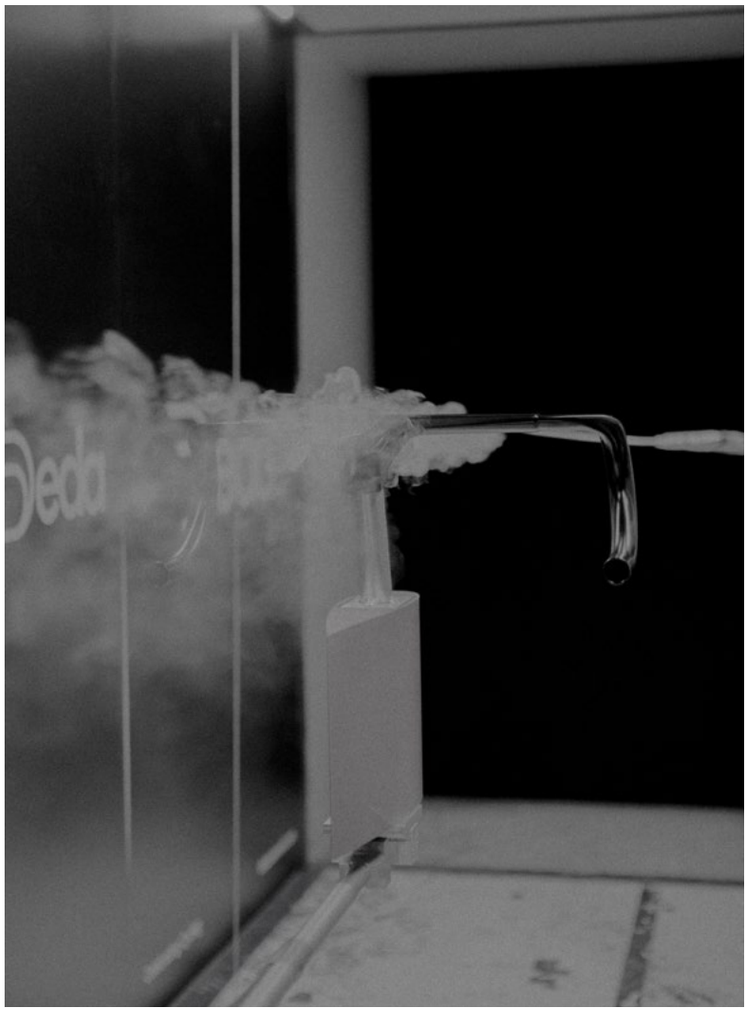

Speed	Alanera Watt	Alanera RS Watt	Watt saving
35,0	8,2	5,8	- 2,4
40,0	13,1	9,2	- 3,9
45,0	18,0	12,5	- 5,5
50,0	26,1	17,3	- 8,7
55,0	34,1	22,2	- 11,9
60,0	44,9	29,4	- 15,5
65,0	55,6	36,5	- 19,1

Aerodynamics optimized with CFD simulation

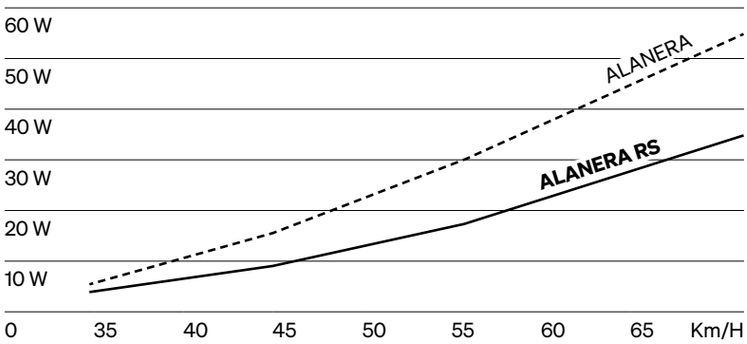

Adattatori Alanera RS
Topcover Alanera RS

IT • Per diversi marchi di biciclette sono stati sviluppati adattatori specifici per Alanera RS. L'elenco più aggiornato e completo dei modelli di bicicletta compatibili con il sistema DCR è disponibile nell'area DCR Tech di dedaelementi.com

EN • For several bicycle brands, specific adapters for Alanera RS has been developed. The most updated and complete list of bicycle model compatible with DCR system is available on the DCR Tech area of dedaelementi.com

↓ Colnago (V5RS)

↓ Ridley (Noha, Kanzo, Fenix)

↓ Specialized (Tarmac SL8)

↓ Trek (Madone, Emonda)

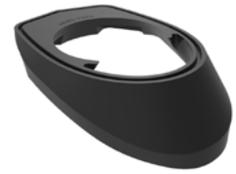

↓ Description	↓ Deda Part Code	↓ EAN13 Code
ARC8 (Escapee) spacer adapter for Alanera RS and Superbox V2	HDRS-ARC	8055774366397
BIANCHI (Specialissima) topcover adapter for Alanera RS and Superbox V2	HDRS-BIAN	8055774367103
BIANCHI (Specialissima-Impulso RC/Pro/Comp) topcover adapter for Alanera RS and Superbox V2	HDRS-BIAN1	8055774366403
BMC (Teammachine, Roadmachine, Kaius, URS) topcover adapter for Alanera RS and Superbox V2	HDRS-BMC	8055774366410
BOTTECCHIA (Aerospace) topcover adapter for Alanera RS and Superbox V2	HDRS-BOT	8055774366427
BOTTECCHIA (Emme 5) topcover adapter for Alanera RS and Superbox V2	HDRS-BOT1	8055774368889
BASSO (Palta, Astra) topcover adapter for Alanera RS and Superbox V2	HDRS-BSS	8055774366434
BASSO (Diamante, Diamante SV) topcover adapter for Alanera RS and Superbox V2	HDRS-BSS1	8055774368957
CANNONDALE (SuperSix) spacer adapter for Alanera RS and Superbox V2	HDRS-CANN	8055774366441
CANNONDALE (SystemSix) spacer adapter for Alanera RS and Superbox V2	HDRS-CANN1	8055774366458
CANNONDALE (SuperSix 2023 &LAB71) spacer adapter for Alanera RS	HDRS-CANN2	8055774366465
CERVÉLO (Caledonia 5) topcover adapter for Alanera RS and Superbox V2	HDRS-CERV	8055774367684
CERVÉLO (R5, Aspero 5 & Soloist) topcover adapter for Alanera RS and Superbox V2	HDRS-CERV1	8055774366472
CHAPTER2 (TOA) spacer adapter for Alanera RS and Superbox V2	HDRS-CH	8055774367837
COLNAGO (C68, V4RS) topcover adapter for Alanera RS and Superbox V2	HDRS-COLN	8055774366489
COLNAGO (C64, V3RS) topcover adapter for Alanera RS and Superbox V2	HDRS-COLN2	8055774367097
COLNAGO (V5RS) topcover adapter for Alanera RS and Superbox V2	HDRS-COLN3	8059493280545
CUBE (Agree) topcover adapter for Alanera RS and Superbox V2	HDRS-CUBE	8055774366496
DE ROSA (70°) topcover adapter for Alanera RS and Superbox V2	HDRS-DR	8055774366502
DE ROSA (Merak) topcover adapter for Alanera RS and Superbox V2	HDRS-DR1	8055774366519
FACTOR (Ostro Vam, O2 Vam) topcover adapter for Alanera RS and Superbox V2	HDRS-FACT	8055774366526
FACTOR (Ostro Vam 2024) topcover adapter for Alanera RS and Superbox V2	HDRS-FACT2	8055774368216
FOCUS (Izalco Max) topcover adapter for Alanera RS and Superbox V2	HDRS-FOCUS	8055774368902
LAPIERRE (Aircode DRS) topcover adapter for Alanera RS and Superbox V2	HDRS-LAP	8055774367844
LOOK (795 Blade RS) topcover adapter for Alanera RS and Superbox V2	HDRS-LOOK	8059493280651
LOOK (765 Optimum, 785 Huez) topcover adapter for Alanera RS and Superbox V2	HDRS-LOOK1	8059493280668
MEGAMO (Raise) topcover adapter for Alanera RS and Superbox V2	HDRS-MEGA	8055774366533
MMR (Adrenaline Aero) topcover adapter for Alanera RS and Superbox V2	HDRS-MMR	8055774366540
OLMO (4.0) & MENDIZ (F12) topcover adapter for Alanera RS and Superbox V2	HDRS-OLMO	8055774366557
ORBEA (Orca OMX, Aero OMX, Terra OMR) spacer adapter for Alanera RS and Superbox V2	HDRS-ORB	8055774361033
PINARELLO (Dogma F, F12) topcover adapter for Alanera RS and Superbox V2	HDRS-PINA	8055774366564
RIBBLE (Ultra-Race, Endurance SL, Allroad SL) spacer adapter for Alanera RS and Superbox V2	HDRS-RIBL	8059493280361
RIDLEY (Noah, Kanzo Fast, Fenix) topcover adapter for Alanera RS and Superbox V2	HDRS-RIDL	8055774366755
RIDLEY (Falcn) topcover adapter for Alanera RS and Superbox V2	HDRS-RIDL1	8055774366762
RIDLEY (Astr RS,X-Night RS,E-Grfn,Falcn) topcover for Alanera RS and Superbox V2	HDRS-RIDL2	8059493280538
RIDLEY (Grifn, Grifn RS, Kanzo Adventure) topcover adapter for Alanera RS and Superbox V2	HDRS-RIDL3	8055774367080
RIDLEY (NOAH 3.0) topcover adapter for Alanera RS and Superbox V2	HDRS-RIDL-NOAH3	8055774367646
ROSE (Backroad FF) topcover adapter for Alanera RS and Superbox V2	HDRS-ROSE	8055774368933
ROSE (Backroad CF, Reveal, Xlite) topcover adapter for Alanera RS and Superbox V2	HDRS-ROSE1	8055774368940
SPECIALIZED (Venge) spacer adapter for Alanera RS	HDRS-SPEC	8055774367363
SPECIALIZED (Tarmac SL7) spacer adapter for Alanera RS and Superbox V2	HDRS-SPEC1-SL7	8055774367264
SPECIALIZED (Tarmac SL8) topcover adapter for Alanera RS and Superbox V2	HDRS-SPEC1	8055774366571
SPECIALIZED (Allez Sprint 2024) topcover adapter for Alanera RS and Superbox V2	HDRS-SPEC2	8055774367752
TREK (Trek Madone SL Gen.6, Emonda SLR) spacer adapter for Alanera RS and Superbox V2	HDRS-TREK	8055774366588
TREK (Madone Gen. 8 2024) topcover adapter for Alanera RS and Superbox V2	HDRS-TREK1	8055774367769
TREK (Madone SL & SLR Gen. 7) topcover adapter for Alanera RS and Superbox V2	HDRS-TREK2	8059493280521
VANRYSEL (RCR) topcover adapter for Alanera RS and Superbox V2	HDRS-VR	8055774366595
WILIER (0 SLR, Cento10, Filante, Garda) topcover adapter for Alanera RS and Superbox V2	HDRS-WI	8055774366601

Caratteristiche Tecniche
Tech Features

Passaggio completo dei cavi interni DCR
• Compatibile solo con passaggio cavi interno e solo cambio elettrico.
• Spazio massimo per 3 cavi (2 freni idraulici + 1 cavo elettrico).

Facile montaggio
• Finestra da 13,5×8 mm per aiutare i meccanici durante l'installazione del cavo.
• Costruzione monoscocca, nessun residuo di colla.

DCR full internal cable routing
• Compatible only with internal cable routing and electric shifting only.
• Max room for 3 cables (2 hydraulic brakes + 1 electric wire).

Easier assembly
• 13.5×8 mm open window to assist mechanics during cable installation.
• Full monocoque construction, no residual of glue.

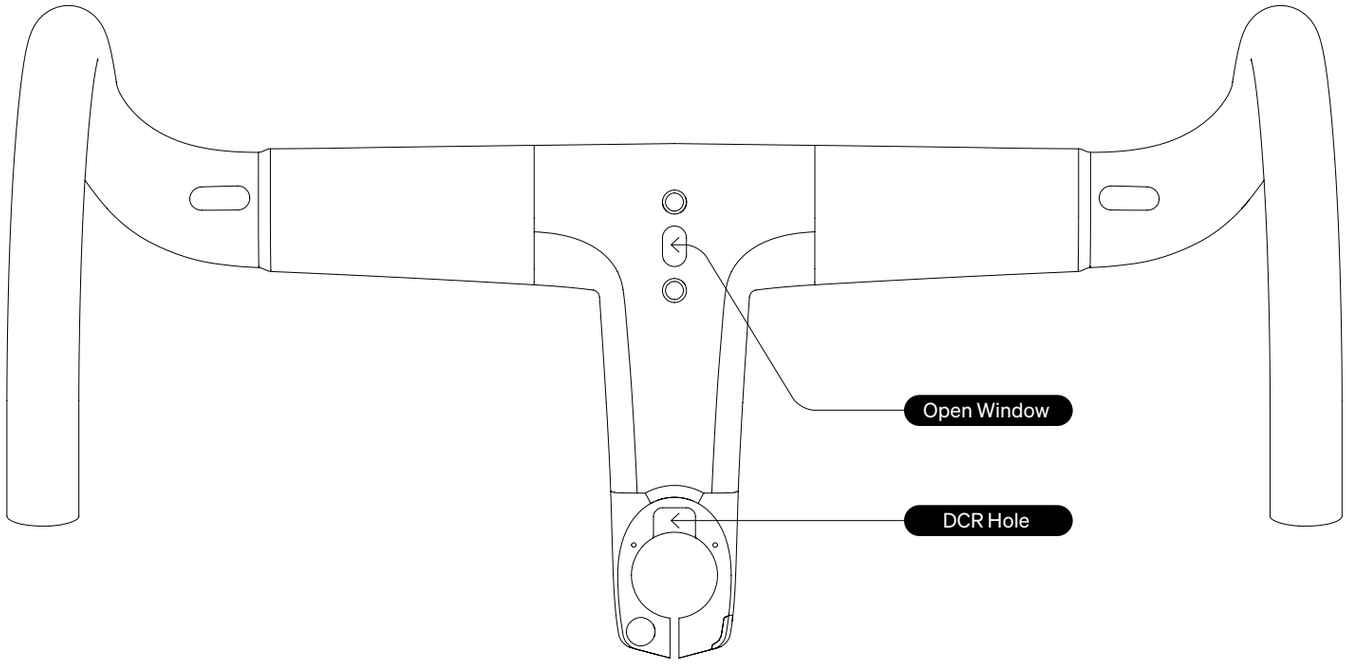

Cover delle viti integrata
• La cover delle viti è in TPU ed è utilizzata per nascondere la testa della vite.
• Ogni Alanera RS viene consegnata con una cover più una extra di ricambio.

Integrated screw cover
• The screw cover is made of TPU and is used to hide the screw head.
• Each Alanera RS is delivered with one cover plus an extra one as a spare.

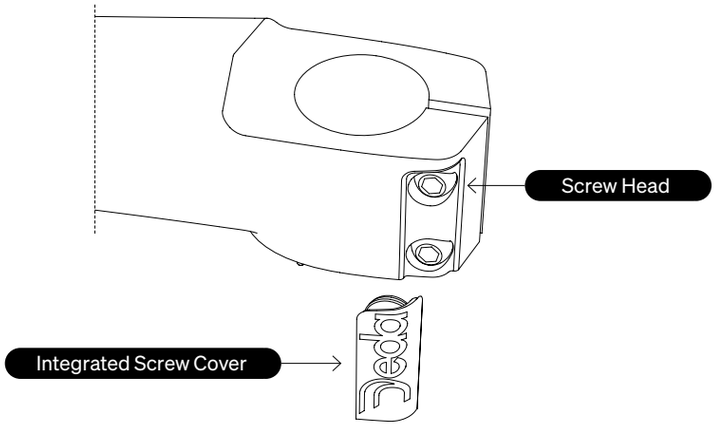

ATTENZIONE : Tagliare la forcella a un massimo di 5 mm sopra il bordo dello sterzo. Si prega di leggere attentamente il manuale di montaggio dell'Alanera RS.

Warning: Cut the fork to a maximum of 5 mm above the edge of the stem. Please read the Alanera RS assembly manual carefully.

RS SEATPOST

Road Gravel MTB

IT • Nuovo reggisella RS disponibile adesso anche con arretramento 12mm. Dal peso ultraleggero di soli 175 grammi, il reggisella RS presenta un sistema di serraggio minimale a una sola vite per un montaggio facile e veloce. Insieme alla versione con arretramento 0 e 25 mm risulta la scelta perfetta per qualsiasi bici premium.

EN • New RS seatpost now also available with 12mm seatpost setback. Weighing an ultralight 175 grams, the RS seatpost features a minimalist 1-bolt clamping system for quick and easy assembly. Together with the 0 and 25 mm setback options it is the perfect choice for any premium bike.

Compatibile col kit montaggio luci al reggisella, *Staffa*. Vedi dedaelementi.com.
Compatible with *Staffa* seatpost lights mount kit. See dedaelementi.com.

Materiale:
Carbonio monoscocca UD
Meccanica:
Alluminio CNC
• AFM: viteria in titanio PVD nera
• OEM: viteria in acciaio
Lunghezza:
350 • 400 mm
Diametro:
Ø 27,2 • 31,6 mm
Arretramento:
0 • 12 • 25 mm
Peso:
• AFM 175 g (Ø 27,2 mm)
• OEM 205 g (Ø 27,2 mm)
Finitura:
POB (Polish on black)
Note:
Compatibile con selle con telaio in carbonio ovale max Ø 7×9.5 mm. Compatibile con adattatori Deda per batteria interna DI2.

Material:
UD Full Carbon construction
Hardware:
CNC alloy plates
• AFM: Titanium PVD black screws
• OEM: Steel screws
Length:
350 • 400 mm
Diameter:
Ø 27,2 • 31,6 mm
Setback:
0 • 12 • 25 mm
Weight:
• AFM 175 g (Ø 27,2 mm)
• OEM 205 g (Ø 27,2 mm)
Finish:
POB (Polish on black)
Notes:
Compatible with a max Ø 7×9.5 mm oval-shaped rail. Fits Deda adapter for DI2 internal battery.

↓ Description	↓ Part Code	↓ EAN13 Code	↓ OEM Part Code	↓ EAN13 OEM Code
RS 0, seatpost, carbon, Ø 27.2 × 350 mm, setback 0 mm, POB, bolts titanium PVD	RSSP-Z-27	8055774366694	RSSP-Z-27X	8055774366700
RS 0, OEM, seatpost, carbon, Ø 27.2 × 350 mm, setback 0 mm, POB finish, steel screws	-	-	RSSP-Z-27-OEM	8055774361064
RS 0, seatpost, carbon, Ø 31.6 × 350 mm, setback 0 mm, POB, bolts titanium PVD	RSSP-Z-31	8055774366717	RSSP-Z-31X	8055774366724
RS 0, seatpost, carbon, Ø 27.2 × 400 mm, setback 0 mm, POB finish, PVD titanium screws	RSSP-Z-27-400	8055774367691	RSSP-Z-27-400X	8055774367707
RS 0, OEM, seatpost, carbon, Ø 27.2 × 400 mm, setback 0 mm, POB finish, steel screws	-	-	RSSP-Z-27-400-OEM	8055774367714
NEW RS 12, carbon seatpost Ø 27. × 350 mm, setback 12 mm, POB finish, PVD titanium screws	RSSP-12-27	8055774368049	RSSP-12-27X	8055774368056
NEW RS 12, OEM, carbon seatpost Ø 27.2 × 350 mm, setback 12 mm, POB finish, steel screws	-	-	RSSP-12-27-OEM	8055774368087
NEW RS 12, carbon seatpost Ø 27.2 × 400 mm, setback 12 mm, POB finish, PVD titanium screws	RSSP-12-27-400	8055774368063	RSSP-12-27-400X	8055774368070
RS 25, seatpost, carbon, Ø 27.2 × 350 mm, setback 25 mm, POB, bolts titanium PVD	RSSP-27	8055774366618	RSSP-27X	8055774366625
RS 25, OEM, seatpost, carbon, Ø 27.2 × 350 mm, setback 25 mm, POB, bolts steel	-	-	RSSP-27-OEM	8055774366632
RS 25, seatpost, carbon, Ø 27.2 × 400mm, setback 25 mm, POB, bolts titanium PVD	RSSP-27-400	8055774366670	RSSP-27-400X	8055774366687
RS 25, OEM, seatpost, carbon, Ø 27.2 × 400 mm, setback 25 mm, POB finish, steel screws	-	-	RSSP-27-400-OEM	8055774366977
RS 25, seatpost, carbon, Ø 31.6 × 350mm, setback 25 mm, POB, bolts titanium PVD	RSSP-31	8055774366656	RSSP-31X	8055774366663
RS 25, OEM, seatpost, carbon, Ø 31.6 × 350 mm, setback 25 mm, POB, bolts steel	-	-	RSSP-31-OEM	8055774366649

Deda
VNC
VNC
Deda

VINCI

VINCI RHM

Road

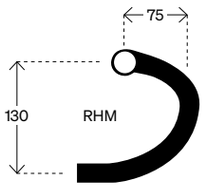

IT • Manubrio Vinci, progettato senza compromessi per una pura integrazione con l'attacco. Sistema DCR (Deda Internal Cable Routing) per la ricerca della massima aerodinamicità con i passaggi dei cavi all'interno del manubrio. Vinci combina idealmente la moderna filosofia di biciclette da corsa progettate per essere aerodinamiche, leggere e rigide. Questo approccio tecnico è evidente sia nel profilo che nella sezione trasversale del manubrio. Progettato per ridurre al minimo la resistenza e fornire un'impugnatura ergonomica per ogni stile di guida. Il manubrio è caratterizzato dalla forma rhm per una presa ineguagliabile. Il manubrio è dotato di due carenature removibili per il montaggio delle prolunghe Superzero TT o di supporti porta computer. Compatibile anche con le estensioni Fastblack e Parabolica utilizzando almeno 1 spessore sopra il morsetto. Disponibile in finitura polish on black (POB).

EN •Vinci handlebar, designed without compromises for a perfect integration with stem. DCR (Deda Internal Cable Routing) system allows the fully internal cables routing inside the handlebar. Vinci ideally matches the modern philosophy of racing bikes designed to be aero apart from being light and stiff. This technical approach is evident on the bar aero profile and cross section that have been designed to minimize the drag and provide an ergonomic grip for any riding style. The handlebar features also the modern rhm shape for an incomparable grip on the drops. The handlebar features two removable foils to be compatible with Superzero TT clip-on or any computer mount. Also compatibile with Fastblack and Parabolica extensions by using at least 1 spacer above the clamp. Available in polish on black (POB) finish.

Forma curva:
RHM Rapid Hand Movement
Materiale:
Carbonio UD
Ø Manubrio:
31,7 mm
Profondità:
75 mm
Altezza:
130 mm
Misure:
40 • 42 • 44 • 46 cm (esterno - esterno)
Peso:
260 g (42 cm)
Finitura:
POB (Polish on black)
Carenature:
Nylon, viti incluse (1 set, 2 pz).
Cod. VCNFOILS
Note:
Compatibile con passaggio cavi interno (fino a 4 cavi).

Shape:
RHM Rapid Hand movement
Material:
Ud carbon fiber
Ø Handlebar:
31,7 mm
Reach:
75 mm
Drop:
130 mm
Sizes:
40 • 42 • 44 • 46 cm (outside-outside)
Weight:
260 g (42 cm)
Finish:
POB (Polish on black)
Foils:
Nylon, including screws (1 set, 2 pcs).
Cod. VCNFOILS
Note:
Compatible with full internal cables routing (up to 4 cables).

↓ Description	↓ Part Code	↓ EAN13 Code	↓ OEM Part Code	↓ EAN13 OEM Code
VINCI, handlebar, carbon, Ø 31.7, 40 cm, RHM, POB	VNPOB40	8052783486283	VNPOB40X	8052783486276
VINCI, handlebar, carbon, Ø 31.7, 42 cm, RHM, POB	VNPOB42	8052783486306	VNPOB42X	8052783486290
VINCI, handlebar, carbon, Ø 31.7, 44 cm, RHM, POB	VNPOB44	8052783486320	VNPOB44X	8052783486313
VINCI, handlebar, carbon, Ø 31.7, 46 cm, RHM, POB	VNPOB46	8052783486344	VNPOB46X	8052783486337

VINCI Shallow

Road

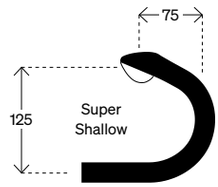

IT • Manubrio Vinci carbonio nella forma shallow o rotonda all'italiana. Sviluppata dal nostro Servizio Corse unitamente ai lavoro dei meccanici e corridori professionisti. La curva classica per definizione, la forma Shallow o Italiana ha scritto la storia di questo fantastico sport. La nuova forma Super Shallow è l'evoluzione di quella classica, sviluppata per ottimizzare il comfort e minimizzare lo sforzo durante gli sprint. Disponibile in 3 taglie, 40, 42 e 44.

EN • Vinci carbon handlebar in the Shallow or Italian shape. Developed by Deda Servizio Corse together with Team mechanics and riders. The classic handlebar by definition, Shallow or Italian shape has written the story of this fantastic sport. Super Shallow shape is the evolution of classic one, to optimize comfort and minimize the effort during sprints. Available in 3 sizes, 40, 42 and 44.

Forma curva:
Super Shallow
Materiale:
Monoscocca carbonio undirezionale
Ø manubrio:
31,7 mm
Profondità:
75 mm
Altezza:
125 mm
Misure:
40 • 42 • 44 cm (esterno-esterno)
Peso:
260 g (42 cm)
Finitura:
POB (Polish on black)
Carenature:
Nylon, viti incluse (1 set, 2 pz).
Cod. VCNFOILS
Note:
Compatibile sistema DCR per passaggi cavi interni (fino a 4 cavi)

Shape:
Super Shallow
Material:
Ud carbon construction
Ø Handlebar:
31,7 mm
Reach:
75 mm
Drop:
125 mm
Sizes:
40 • 42 • 44 cm (outside-to-outside)
Weight:
260 g (42 cm)
Finish:
POB (Polish on black)
Foils:
Nylon, including screws (1 set, 2 pcs).
Cod. VCNFOILS
Note:
Compatible with full internal cables routing (up to 4 cables)

↓ Description	↓ Deda Part Code	↓ EAN13 Code
VINCI SHALLOW, handlebar, carbon, Ø 31.7, 40 cm, RHM, POB	VNSHALLOWPOB40	8052783488164
VINCI SHALLOW, handlebar, carbon, Ø 31.7, 42 cm, RHM, POB	VNSHALLOWPOB42	8052783488171
VINCI SHALLOW, handlebar, carbon, Ø 31.7, 44 cm, RHM, POB	VNSHALLOWPOB44	8052783488188

VINCI

Road

Aero Topcap

Finitura POB
POB Finish

DCR (Deda Internal Cable Routing)
Il sistema permette l'integrazione completa dei cavi all'interno del manubrio (fino a quattro cavi).
The system allows the full integration of the cables inside the handlebar (up to four cables).

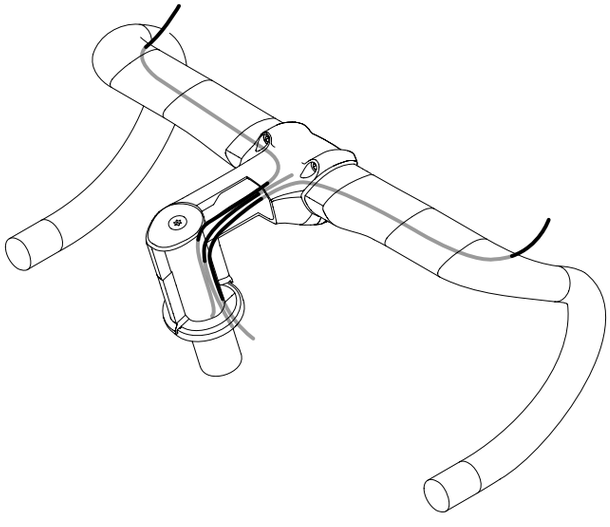

Passaggio cavi interno
Internal cables routing

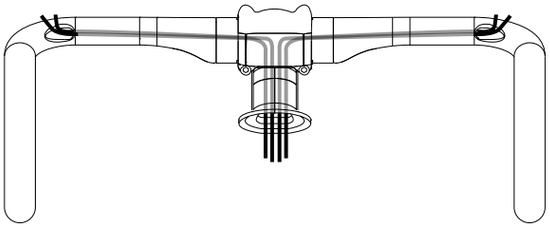

Passaggio cavi esterno
External cables routing

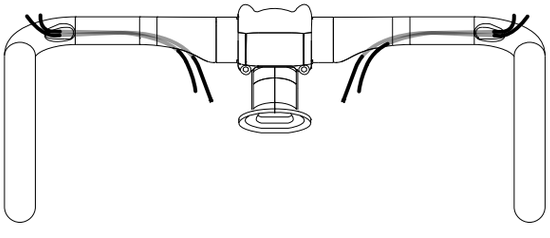

IT • L'attacco Vinci è il primo attacco Deda progettato per un'integrazione completa dei cavi insieme ai manubri Deda con sistema DCR (Deda Internal Cable Routing). Vinci è l'attacco più versatile nel mercato in quanto può essere montato con cannotto forcella tradizionale da 1-1/8" oppure da 1-1/4". Il sistema DCR funziona con forcelle tradizionali da 1-1/8" ma richiede un tubo sterzo telaio con cuscinetto superiore da 52 mm (1.5").
L'attacco ha una apertura posizionata nella parte inferiore che permette l'integrazione dei cavi nell'interspazio tra cuscinetto e forcella.
Completa il design dell'attacco Vinci una serie di spessori con dei canali per il passaggio dei cavi. Gli spessori sono progettati per essere apribili senza dover smontare alcun cavo dal telaio per una facile regolazione dell'altezza di sterzo. L'innovativo processo di forgiatura 3D dell'attacco con la forma piatta garantisce una migliore aerodinamicità.
La linea completa di accessori include un coperchietto aero integrato, gli spessori sterzo e l'adattatore in alluminio per forcelle da 1-1/8".
Disponibile in finitura POB (Polish on black).

EN • The Vinci stem is the first Deda stem designed to allow a fully integrated cable routing when assembled with Deda handlebars featuring the DCR system (Deda internal cable routing). Vinci is the most polyvalent stem on the market being compatible with traditional 1-1/8" fork steerer as well as 1-1/4". The DCR system works with a standard tapered steerer with 1-1/8" upper diameter, but requires a 52mm (1.5") upper headset bearing od.
The stem leaves room at the back for the cables to fit the gap in between the headset bearing and the fork. The Vinci stem system features special spacers that provide the channels for the housing cables. Spacers are designed with slits that let them pull open, they can be added or removed to get the fit right without having to remove all cables. The innovative 3D forging technology and the flat design result in a better aero performance.
The aero integrated topcap, headset spacers and alloy sleeve adapter for 1-1/8" fork steerer complete the line of accessories included.
Available in POB (Polish on black) finish.

Materiale:
Alluminio 2014
Viteria:
Acciaio, nera
Angolo:
73°
Ø Manubrio:
31,7 mm
Cannotto Forcella:
1 1/4" (31,75mm),
adattatore incluso per 1 1/8"
Altezza attacco:
40 mm
(incluso il primo spessore obbligatorio)
Misure:
90 • 100 • 110 • 120 • 130 • 140 mm
Peso:
260 g (110 mm)
Finitura:
POB (Polish on black)
Accessori inclusi:
Coperchietto aero, spessori e topcover tubo sterzo da 46 e 56 mm.
Altri accessori:
Supporto compatibile con Garmin® (serie 500, 800 & 1000), Wahoo® (Elemnt Bolt, Roam & Ace), Bryton® e Gopro®. Topcover tubo sterzo da 52 mm (forcella 1 1/4").
Note:
Compatibile con passaggio cavi interni (fino a 4 cavi).

material:
Alloy 2014
Screws:
Steel, black
Angle:
73°
Ø Handlebar:
31,7 mm
Fork steerer:
1 1/4" (31,75mm),
adapter included for 1 1/8"
Clamp Height:
40 mm
(including the first compulsory spacer)
Sizes:
90 • 100 • 110 • 120 • 130 • 140 mm
Weight:
260 g (110 mm)
Finish:
POB (Polish on black)
Included accessories:
Aero topcap, headset spacers and topcover for headtube 56 and 46 mm.
Other accessories:
A special mount compatible with Garmin® (500, 800 & 1000 series), Wahoo® (Elemnt Bolt, Roam & Ace), Bryton® and Gopro®. Topcover for 52 mm headtube (1 1/4" fork).
Notes:
Compatible with full internal cables routing (up to 4 cables).

Altri accessori: Vinci porta computer
Other accessories: Vinci computer mount

Vedi pagina *Accessori Vinci.*
See page *Vinci accessories.*

↓ Description	↓ Part Code	↓ EAN13 Code
VINCI, stem, aluminium 2014, 90 mm, 73°, POB, bolts steel	VNPOB090	8052783486108
VINCI, stem, aluminium 2014, 100 mm, 73°, POB, bolts steel	VNPOB100	8052783486115
VINCI, stem, aluminium 2014, 110 mm, 73°, POB, bolts steel	VNPOB110	8052783486122
VINCI, stem, aluminium 2014, 120 mm, 73°, POB, bolts steel	VNPOB120	8052783486139
VINCI, stem, aluminium 2014, 130 mm, 73°, POB, bolts steel	VNPOB130	8052783486146
VINCI, stem, aluminium 2014, 140 mm, 73°, POB, bolts steel	VNPOB140	8052783486153

Accessori Vinci
Vinci accessories

Vinci porta computer • Computer mount è progettato per l'attacco Vinci. Vinci computer mount include 3 diversi inserti compatibili con Garmin® (Serie 500, 800 e 1000), Bryton®, Wahoo® (Elemnt Bolt, Roam & Ace) oltre all'aggangio GoPro®. Realizzato in nylon rinforzato in fibra di vetro. Peso: 82 gr.

Peso massimo consentito: 350 g (es. 150 g computer + 200 g luce).

Vinci computer mount • Computer mount specifically designed to fit Vinci stem. Vinci computer mount includes with inserts to fit Garmin® (500, 800 and 1000 series), Bryton®, Wahoo® (Elemnt Bolt, Roam & Ace) and a specific GoPro® alloy mount. Made in nylon glass fibre reinforced. Weight: 82 gr.

Max load: 350 g (i.e. 150 g computer + 200 g light).

↓ Description	↓ Deda Part Code	↓ EAN13 Code
VINCI Computer mount , nylon, per Garmin®, Wahoo®, Bryton®, GoPro®	VCNMOUNT	8052783486603

Adattatori Vinci • Per alcuni marchi di biciclette sono stati sviluppati specifici adattatori per Vinci. La lista più aggiornata e completa dei modelli di bici compatibili è disponibile sotto la sezione DCR Tech del sito dedaelementi.com

Topcover Vinci • For several bicycle brands, specific adapters for Vinci has been developed. The most updated and complete list of bicycle model compatible with DCR system is available on the DCR Tech area of dedaelementi.com

↓ Description	↓ Deda Part Code	↓ EAN13 Code
BIANCHI (Specialissima). Top cover adapter for Vinci DCR	HDVCNTCBIAN	8052783489635
BMC (Teammachine, Roadmachine, Kaius, URS) adapter for Vinci DCR	HDVCNTCBMC	8055774364171
BOTTECCHIA (Aerospace) top cover adapter for Vinci DCR	HDVCNTCBOT	8055774361521
CANNONDALE (SuperSix Evo). Top cover adapter for Vinci DCR	HDVCNTCCANN	8052783487662
CANNONDALE (SystemSix). Top cover adapter for Vinci DCR	HDVCNTCCANN1	8052783489734
CERVÉLO (Caledonia 5) top cover adapter for Vinci DCR	HDVCNTCCERV	8055774361491
CERVÉLO (R5, Aspero 5 & Soloist) top cover adapter for Vinci DCR	HDVCNTCCERV1	8055774362429
COLNAGO (C64, V3RS). Top cover adapter for Vinci DCR	HDVCNTCCOLN	8052783487655
DE ROSA (70°) top cover adapter for Vinci DCR	HDVCNTCDR	8055774364218
DE ROSA (Merak) top cover adapter for Vinci DCR	HDVCNTCDR1	8055774364607
GIANT (Propel MY2023) spacer adapter for Vinci DCR	HDVCNTCGIANT	8055774364195
MMR (Adrenaline Aero) top spacer adapter for Vinci DCR	HDVCNTCMMR	8055774363273
OLMO (4.0) & MENDIZ (F12) Top cover adapter for Vinci DCR	HDVCNTCOLMO	8052783487693
ORBEA (Orca OMX, Orca Aero OMX, Terra) top spacer adapter for Vinci DCR	HDVCNTCORB	8055774363174
PINARELLO (Dogma F, F12) top cover adapter for Vinci DCR	HDVCNTCPINA	8055774361460
RIDLEY (Noah Fast, Kanzo Fast, Fenix) – EDDY MERCKx (525). Top cover adapter for Vinci DCR	HDVCNTCRIDL	8052783487679
SCOTT (Scott Addict RC). Top cover adapter for Vinci DCR	HDVCNTCSCOTT	8055774364454
SPECIALIZED (Tarmac SL7, SL8). Top cover adapter for Vinci DCR	HDVCNTCSPEC1	8052783488584
SPECIALIZED (Venge). Top cover adapter for Vinci DCR	HDVCNTCSPEC	8052783488287
TREK (Emonda, Madone). Top cover adapter for Vinci DCR	HDVCNTCTREK	8052783488256
WILIER (0 SLR, Filante, Cento10). Top cover adapter for Vinci DCR	HDVCNTCWILI	8052783488232

DRALI

SUPERBOX V2

Road Gravel MTB

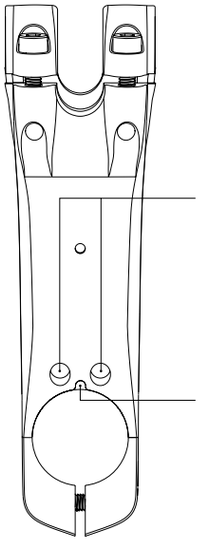

DCR • Passaggio cavi interno. 2 cavi
DCR • Integrated cable routing. 2 cables

S-DCR • Passaggio cavi semi-integrato. 4 cavi
S-DCR • Semi-integrated cable rounting. 4 cables

IT • Progettato per rispondere alle esigenze del ciclismo moderno, l'attacco manubrio Superbox V2 rappresenta un nuovo punto di riferimento nei sistemi integrati. Ora aggiornato con il sistema di spessori RS, lo stesso utilizzato sull'Alanera RS, questa versione offre la massima versatilità per la gestione dei cavi interni, garantendo un'estetica pulita e prestazioni elevate. Dotato di viti premium con trattamento superficiale GST che assicurano un'eccellente resistenza alla corrosione e ai graffi, supporta tutte le configurazioni di instradamento dei cavi: completamente interno (DCR), semi-interno (S-DCR), diretto ed esterno, adattandosi facilmente a qualsiasi combinazione di telaio e manubrio. Compatibile con tubi sterzo superiori da 46 mm (1-1/8") e 56 mm (1.5"), si adatta perfettamente a bici da strada, gravel e mountain bike. Gli spessori RS con aperture posteriori e il tappo della serie sterzo in nylon consentono una regolazione rapida e interventi di manutenzione facili, senza scollegare cavi idraulici o elettronici.

EN • Engineered for seamless integration and top-tier performance, the Superbox V2 represents the next generation of stem design. Now upgraded with the RS spacers system, shared with the Alanera RS, this stem delivers unmatched cable routing versatility for today's clean cockpit standards. Superbox V2 introduces premium GST-coated screws that offers exceptional resistance to corrosion and scratches. With support for DCR, S-DCR, Direct, and External routing, Superbox V2 adapts to virtually any frame and handlebar configuration. Whether you're building a sleek road setup or an internal-routed gravel or MTB bike, this stem ensures optimal integration without compromise. Compatible with both 46 mm (1-1/8") and 56 mm (1.5") upper head tubes, it fits a wide range of modern bikes.

Materiale:
Alluminio 6061
Viteria:
Acciaio, nera (Rivestita GST)
Angolo:
82°
Ø Manubrio:
31,7 mm
Cannotto forcella:
1 1/8" (28,6 mm)
Altezza attacco:
32 mm (47 mm con la cover)
Misure:
60 • 70 • 80 • 90 • 100 • 110
120 • 130 • 140 • 150 • 160 mm
Peso:
175 g (110 mm)
Finitura:
POB (Polish on black)
Accessori inclusi:
Topcap, spessori e topcover sterzo da 46 e 56 mm, inserto D-clip. Anello di compressione DCR.
Note:
Il sistema del passaggio cavi interno (DCR) è compatibile solo con gruppi elettronici (fino a 2 cavi); il sistema semi-integrato (S-DCR) è compatibile con qualsiasi bici e configurazione di gruppo (fino a 4 cavi).

Materiale:
Alloy 6061
Screws:
Steel, black (GST-coated)
Angle:
82°
Ø Handlebar:
31,7 mm
Fork Steerer:
1 1/8" (28,6 mm)
Clamp Height:
32 mm (47 mm with cover)
Sizes:
60 • 70 • 80 • 90 • 100 • 110
120 • 130 • 140 • 150 • 160 mm
Weight:
175 g (110 mm)
Finish:
POB (Polish on black)
Included accessories:
Integrated topcap, headset spacers and topcover for headtube 56 and 46 mm, D-clip insert. DCR compression ring
Notes:
The internal cable routing (DCR) fits electronic groupset only (up to 2 cables), the semi-integrated cable routing (S-DCR) fits any bike and groupset configuration (up to 4 cables).

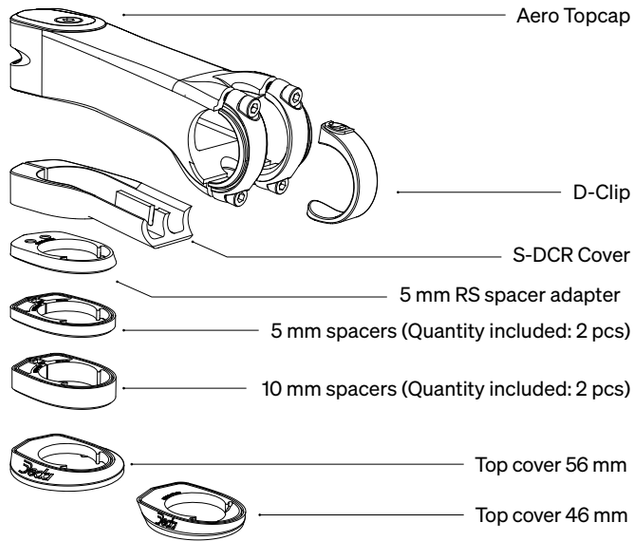

↓ Description	↓ Part Code	↓ EAN13 Code	↓ OEM Part Code	↓ EAN13 OEM Code
SUPERBOX V2, stem, 60 mm, POB finish, Alloy 6061, 82°, GST steel screws	SBOX-V2-060	8055774368599	SBOX-V2-060X	8055774368605
SUPERBOX V2, stem, 70 mm, POB finish, Alloy 6061, 82°, GST steel screws	SBOX-V2-070	8055774368612	SBOX-V2-070X	8055774368629
SUPERBOX V2, stem, 80 mm, POB finish, Alloy 6061, 82°, GST steel screws	SBOX-V2-080	8055774368636	SBOX-V2-080X	8055774368643
SUPERBOX V2, stem, 90 mm, POB finish, Alloy 6061, 82°, GST steel screws	SBOX-V2-090	8055774368650	SBOX-V2-090X	8055774368667
SUPERBOX V2, stem, 100 mm, POB finish, Alloy 6061, 82°, GST steel screws	SBOX-V2-100	8055774368674	SBOX-V2-100X	8055774368681
SUPERBOX V2, stem, 110 mm, POB finish, Alloy 6061, 82°, GST steel screws	SBOX-V2-110	8055774368698	SBOX-V2-110X	8055774368704
SUPERBOX V2, stem, 120 mm, POB finish, Alloy 6061, 82°, GST steel screws	SBOX-V2-120	8055774368711	SBOX-V2-120X	8055774368728
SUPERBOX V2, stem, 130 mm, POB finish, Alloy 6061, 82°, GST steel screws	SBOX-V2-130	8055774368735	SBOX-V2-130X	8055774368742
SUPERBOX V2, stem, 140 mm, POB finish, Alloy 6061, 82°, GST steel screws	SBOX-V2-140	8055774368759	SBOX-V2-140X	8055774368766
SUPERBOX V2, stem, 150 mm, POB finish, Alloy 6061, 82°, GST steel screws	SBOX-V2-150	8055774368773	SBOX-V2-150X	8055774368780
SUPERBOX V2, stem, 160 mm, POB finish, Alloy 6061, 82°, GST steel screws	SBOX-V2-160	8055774368797	SBOX-V2-160X	8055774368803

Superbox One Stem Four Ways

DCR • Passaggio cavi interno. 2 cavi
DCR • Integrated cable routing. 2 cables

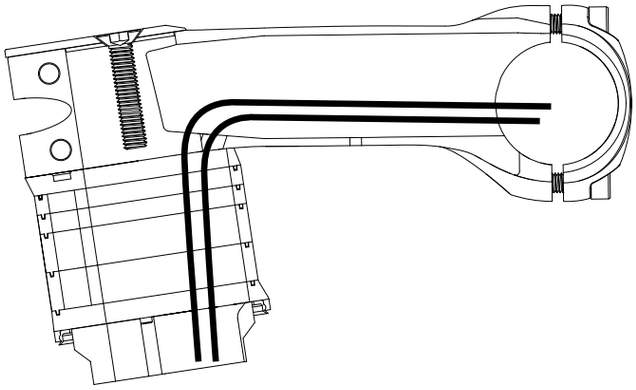

S-DCR • Passaggio cavi semi-integrato. 4 cavi
S-DCR • Semi-integrated cable rounting. 4 cables

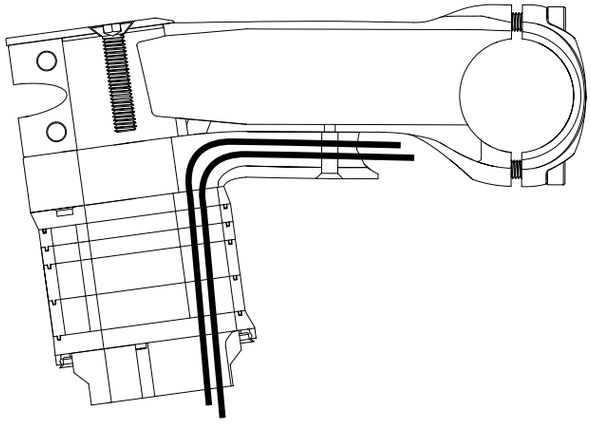

Diretto • Passaggio cavi con serie sterzo S-DCR. 4 cavi
Direct • Internal cable routing with S-DCR headset. 4 cables

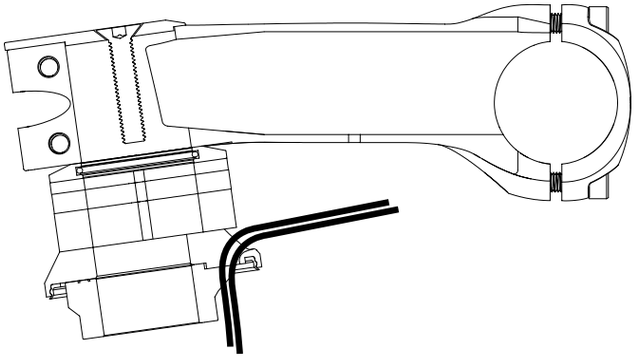

Esterna • Passaggio cavi tradizionale
External • Traditional cable routing

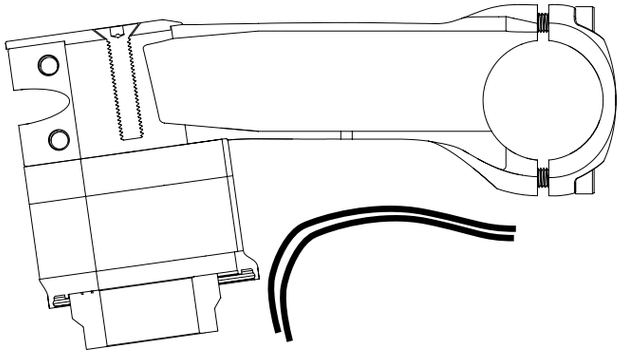

DCR Configuration
Integrazione completa dei cavi all'interno del manubrio,
solo per gruppi idraulici/elettronici.
System allows the full integration of the cables inside the handlebar,
for hydraulic/electronic groupes only.

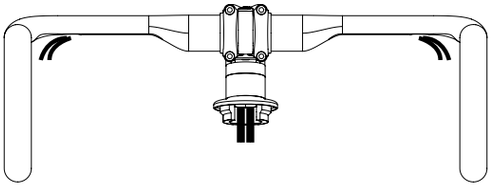

S-DCR (Deda Internal Cable Routing)
Passaggio cavi semi-integrato, fino a quattro cavi.
Semi-integrated cable routing, up to four cables.

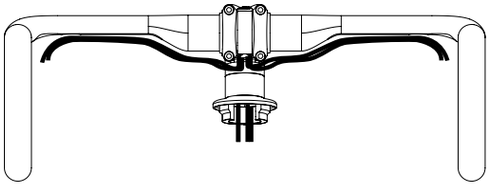

Accessori Superbox
Superbox accessories

Nuovo computer mount per l'attacco Superbox • Il porta computer è disponibile come accessorio e include 3 diversi inserti per Garmin® (serie 500, 800, 1000), Bryton®, Wahoo® (Elemnt Bolt, Roam & Ace) oltre all'aggancio GoPro®. Il porta computer richiede l'utilizzo del nuovo frontalino montato di serie sul Superbox DCR ed è anche disponibile come ricambio (codice FCSBX-DCR) per chi avesse acquistato il precedente modello di Superbox. Realizzato in nylon rinforzato in fibra di vetro. Peso: 35 g

New Superbox computer mount • The computer mount is available as accessory and includes 3 different inserts to fit Garmin® (500, 800, 1000 series), Bryton®, Wahoo® (Elemnt Bolt, Roam & Ace) and a specific GoPro® mount. The mount requires the new faceplate of Superbox DCR and it is available also as spare part (part code FCSBX-DCR) to retro-fit the previous Superbox stem version. Made in nylon glass fibre reinforced. Weight: 35 g

Peso massimo consentito: 350 g (es. 150 g computer + 200 g luce).
Max load: 350 g (i.e. 150 g computer + 200 g light).

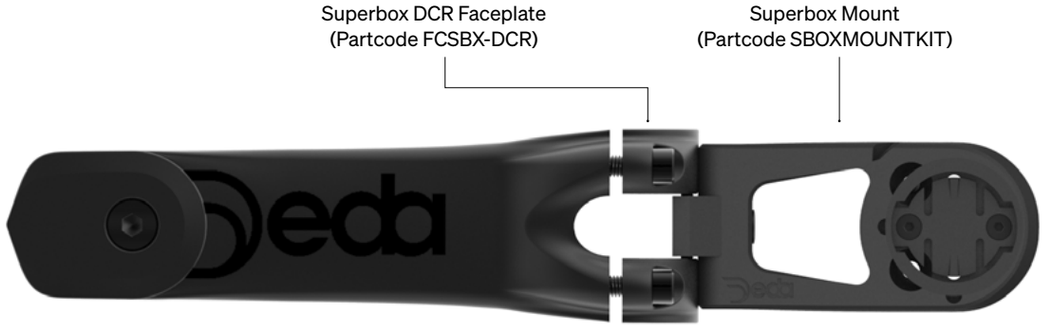

Compatibilità attacchi manubrio col supporto Superbox mount
Superbox mount stems compatibility

↓ Attacco manubrio Stem	↓ Compatibilità supporto Mount compatibility	↓ Richiesta del nuovo frontalino New faceplate required	↓ Incluso con l'attacco manubrio Included with stem
SUPERBOX V2	Y	N	Y
SUPERBOX DCR	Y	N	Y
SUPERBOX	Y	Y	N(*) Code: FCSBX-DCR
SUPERZERO RS	Y	Y	N(*) Code: FCSZ-MOUNT
SUPERZERO	Y	Y	N(*) Code: FCSZ-MOUNT

Adattatori Superbox V2
Topcover Superbox V2

IT • Per diversi marchi di biciclette sono stati sviluppati adattatori specifici per l'attacco Superbox V2. L'elenco più aggiornato e completo dei modelli di bicicletta compatibili con il sistema DCR è disponibile nell'area DCR Tech di dedaelementi.com

EN • For several bicycle brands, specific adapters for Superbox V2 stem have been developed. The most updated and complete list of bicycle model compatible with DCR system is available on the DCR Tech area of dedaelementi.com

↓ Colnago (V5RS)

↓ Ridley (Noha, Kanzo, Fenix)

↓ Specialized (Tarmac SL8)

↓ Trek (Madone, Emonda)

↓ Description	↓ Deda Part Code	↓ EAN13 Code
ARC8 (Escapee) spacer adapter for Alanera RS and Superbox V2	HDRS-ARC	8055774366397
BIANCHI (Specialissima) topcover adapter for Alanera RS and Superbox V2	HDRS-BIAN	8055774367103
BIANCHI (Specialissima-Impulso RC/Pro/Comp) topcover adapter for Alanera RS and Superbox V2	HDRS-BIAN1	8055774366403
BMC (Teammachine, Roadmachine, Kaius, URS) topcover adapter for Alanera RS and Superbox V2	HDRS-BMC	8055774366410
BOTTECCHIA (Aerospace) topcover adapter for Alanera RS and Superbox V2	HDRS-BOT	8055774366427
BOTTECCHIA (Emme 5) topcover adapter for Alanera RS and Superbox V2	HDRS-BOT1	8055774368889
BASSO (Palta, Astra) topcover adapter for Alanera RS and Superbox V2	HDRS-BSS	8055774366434
BASSO (Diamante, Diamante SV) topcover adapter for Alanera RS and Superbox V2	HDRS-BSS1	8055774368957
CANNONDALE (SuperSix) spacer adapter for Alanera RS and Superbox V2	HDRS-CANN	8055774366441
CANNONDALE (SystemSix) spacer adapter for Alanera RS and Superbox V2	HDRS-CANN1	8055774366458
CERVÉLO (Caledonia 5) topcover adapter for Alanera RS and Superbox V2	HDRS-CERV	8055774367684
CERVÉLO (R5, Aspero 5 & Soloist) topcover adapter for Alanera RS and Superbox V2	HDRS-CERV1	8055774366472
CHAPTER2 (TOA) spacer adapter for Alanera RS and Superbox V2	HDRS-CH	8055774367837
COLNAGO (C68, V4RS) topcover adapter for Alanera RS and Superbox V2	HDRS-COLN	8055774366489
COLNAGO (C64, V3RS) topcover adapter for Alanera RS and Superbox V2	HDRS-COLN2	8055774367097
COLNAGO (V5RS) topcover adapter for Alanera RS and Superbox V2	HDRS-COLN3	8059493280545
CUBE (Agree) topcover adapter for Alanera RS and Superbox V2	HDRS-CUBE	8055774366496
DE ROSA (70°) topcover adapter for Alanera RS and Superbox V2	HDRS-DR	8055774366502
DE ROSA (Merak) topcover adapter for Alanera RS and Superbox V2	HDRS-DR1	8055774366519
FACTOR (Ostro Vam, O2 Vam) topcover adapter for Alanera RS and Superbox V2	HDRS-FACT	8055774366526
FACTOR (Ostro Vam 2024) topcover adapter for Alanera RS and Superbox V2	HDRS-FACT2	8055774368216
FOCUS (Izalco Max) topcover adapter for Alanera RS and Superbox V2	HDRS-FOCUS	8055774368902
LAPIERRE (Aircode DRS) topcover adapter for Alanera RS and Superbox V2	HDRS-LAP	8055774367844
LOOK (795 Blade RS) topcover adapter for Alanera RS and Superbox V2	HDRS-LOOK	8059493280651
LOOK (765 Optimum, 785 Huez) topcover adapter for Alanera RS and Superbox V2	HDRS-LOOK1	8059493280668
MEGAMO (Raise) topcover adapter for Alanera RS and Superbox V2	HDRS-MEGA	8055774366533
MMR (Adrenaline Aero) topcover adapter for Alanera RS and Superbox V2	HDRS-MMR	8055774366540
OLMO (4.0) & MENDIZ (F12) topcover adapter for Alanera RS and Superbox V2	HDRS-OLMO	8055774366557
ORBEA (Orca OMX, Aero OMX, Terra OMR) spacer adapter for Alanera RS and Superbox V2	HDRS-ORB	8055774361033
PINARELLO (Dogma F, F12) topcover adapter for Alanera RS and Superbox V2	HDRS-PINA	8055774366564
RIBBLE (Ultra-Race, Endurance SL, Allroad SL) spacer adapter for Alanera RS and Superbox V2	HDRS-RIBL	8059493280361
RIDLEY (Noah, Kanzo Fast, Fenix) topcover adapter for Alanera RS and Superbox V2	HDRS-RIDL	8055774366755
RIDLEY (Falcn) topcover adapter for Alanera RS and Superbox V2	HDRS-RIDL1	8055774366762
RIDLEY (Astr RS,X-Night RS,E-Grfn,Falcn) topcover for Alanera RS and Superbox V2	HDRS-RIDL2	8059493280538
RIDLEY (Grifn, Grifn RS, Kanzo Adventure) topcover adapter for Alanera RS and Superbox V2	HDRS-RIDL3	8055774367080
RIDLEY (NOAH 3.0) topcover adapter for Alanera RS and Superbox V2	HDRS-RIDL-NOAH3	8055774367646
ROSE (Backroad FF) topcover adapter for Alanera RS and Superbox V2	HDRS-ROSE	8055774368933
ROSE (Backroad CF, Reveal, Xlite) topcover adapter for Alanera RS and Superbox V2	HDRS-ROSE1	8055774368940
SPECIALIZED (Tarmac SL7) spacer adapter for Alanera RS and Superbox V2	HDRS-SPEC1-SL7	8055774367264
SPECIALIZED (Tarmac SL8) topcover adapter for Alanera RS and Superbox V2	HDRS-SPEC1	8055774366571
SPECIALIZED (Allez Sprint 2024) topcover adapter for Alanera RS and Superbox V2	HDRS-SPEC2	8055774367752
TREK (Trek Madone SL Gen.6, Emonda SLR) spacer adapter for Alanera RS and Superbox V2	HDRS-TREK	8055774366588
TREK (Madone Gen. 8 2024) topcover adapter for Alanera RS and Superbox V2	HDRS-TREK1	8055774367769
TREK (Madone SL & SLR Gen. 7) topcover adapter for Alanera RS and Superbox V2	HDRS-TREK2	8059493280521
VANRYSEL (RCR) topcover adapter for Alanera RS and Superbox V2	HDRS-VR	8055774366595
WILIER (0 SLR, Cento10, Filante, Garda) topcover adapter for Alanera RS and Superbox V2	HDRS-WI	8055774366601

ARGON
ABUS
ABUS
PUSH BIKERS

SUPERLEGGERA RS

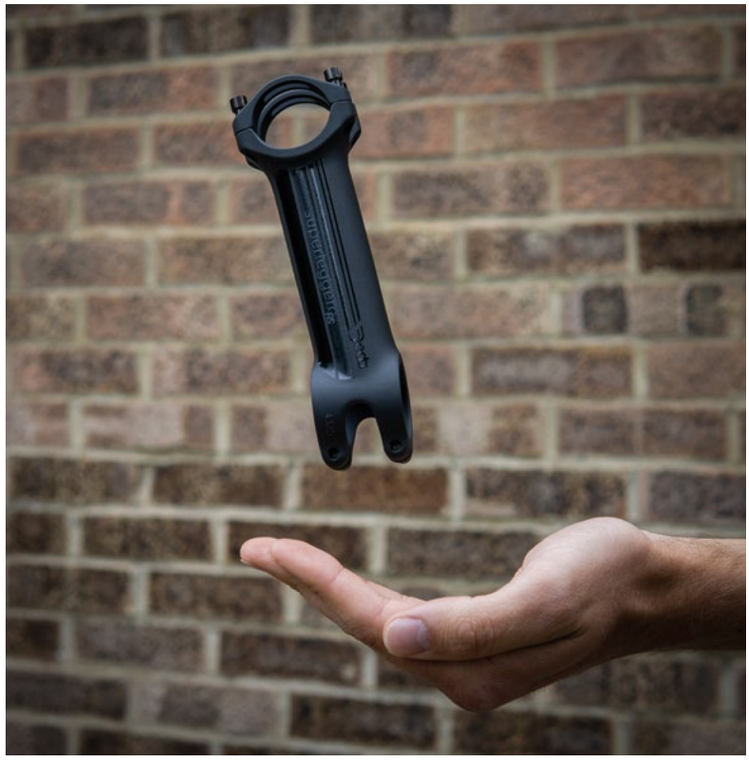

IT • La serie Superleggera RS rappresenta la produzione più innovativa e tecnologica di Deda. L'utilizzo dei migliori materiali e processi tecnologici per offrire il kit attacco e manubrio più leggero al mondo. L'estrema leggerezza è il vero valore di questa serie utilizzando forme minimali e funzionali. Un esclusiva e elegante finitura interamente conferisce un tocco di stile unico e inconfondibile.

EN • The Superleggera RS series represents the most innovative and technological production from Deda. The application of the best materials and advanced manufacturing process to deliver the lightest kit stem & handlebar in the world. The extreme lightness is the key value of this series, achieved thanks to a minimal and functional design. An exclusive and elegant finish gives the RS series a unique stylish touch.

SUPERLEGGERA RS

Road

Finitura POB
POB Finish

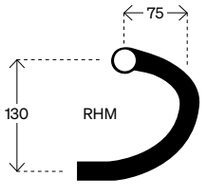

IT • La famosa curva in carbonio Superleggera nell'esclusiva versione RS. Prodotta con la rivoluzionaria fibra di carbonio HR40 e una speciale resina che permette di compattare lo spessore e di ridurre ogni grammo in eccesso. In combinazione con il nuovo attacco Superleggero RS risulta un kit dal peso imbattibile.

EN • The famous Superleggera handlebar in the exclusive RS edition. Made of the revolutionary HR40 carbon fiber and special resin that allows to produce a very compact composite, shaving off every excess gram of weight. The combination with Superleggero RS stem results in an unbeatable weight.

Forma curva:
RHM Rapid Hand Movement
Materiale:
Carbonio HR40
Diametro manubrio:
31,7 mm
Profondità:
75 mm
Altezza:
130 mm
Misure:
42 • 44 • 46 cm (esterno - esterno)
Peso:
180 g (42 cm)
Finitura:
Grafiche nero lucido (POB)

Shape:
RHM Rapid Hand Movement
Material:
Carbon HR40
Diameter handlebar:
31,7 mm
Reach:
75 mm
Drop:
130 mm
Sizes:
42 • 44 • 46 cm (outside to outside)
Weight:
180 g (42 cm)
finish:
Polish on black graphics (POB)

↓ Description	↓ Deda Part Code	↓ EAN13 Code
SUPERLEGGERA RS, handlebar, carbon, Ø 31.7, 42 cm, RHM	SL31RS42	8059265686506
SUPERLEGGERA RS, handlebar, carbon, Ø 31.7, 44 cm, RHM	SL31RS44	8059265686513
SUPERLEGGERA RS, handlebar, carbon, Ø 31.7, 46 cm, RHM	SL31RS46	8059265686520

SUPERLEGGERO RS

Road

Duracer®
Ceramic Coating

Finitura POB
POB Finish

Deda Tool Zipcase. Incluso con attacco Superleggero RS
Deda Tool Zipcase. Included with Superleggero RS stem

IT • L'attacco Deda più leggero in lega 7050 nell'esclusiva finitura RS combinata alla tecnologia Duracer®. Duracer® è uno speciale rivestimento ceramico che garantisce un'estrema durezza superficiale e migliora considerevolmente la performance a fatica. Questo permette di rimuovere materiale da alcune zone specifiche dell'attacco. Speciali viti titanio e un frontalino ridisegnato portano il peso al limite estremo dei 100g.

EN • The lightest Deda stem in aluminum 7050 with the exclusive RS finish combined with Duracer® technology. With its unique characteristics, Duracer® is a ceramic surface treatment technology which provides extreme hardness and improves the fatigue performance. This allows to remove material in specific zones and to save additional weight. Special titanium screws and a redesigned faceplate bring the weight to the limit of 100 grams.

Materiale:
Alluminio 7050
Viteria:
Titanio PVD Nera
Angolo:
82°
Diametro Manubrio:
31,7 mm
Cannotto Forcella:
1 1/8" (28,6mm)
Altezza attacco:
36 mm
Misure:
90 • 100 • 110 • 120 • 130 mm
Peso:
100 g (110 mm)
Finitura:
Duracer®, grafiche nero lucido
Note:
Raccomandato solo per montaggio con curve manubrio Deda in carbonio

Material:
Alloy 7050
Screws:
Titanium black PVD
Angle:
82°
Ø Handlebar:
31,7 mm
Fork steerer:
1 1/8" (28,6mm)
Clamp Height:
36 mm
Sizes:
90 • 100 • 110 • 120 • 130 mm
Weight:
100 g (110 mm)
Finish:
Duracer®, Polish on black graphics
Notes:
Recommended mounting with Deda carbon handlebars only

↓ Description	↓ Deda Part Code	↓ EAN13 Code
SUPERLEGGERO RS, stem, aluminium 7050, 90 mm, 82°, bolts titanium PVD	ASLRS090	8059265686452
SUPERLEGGERO RS, stem, aluminium 7050, 100 mm, 82°, bolts titanium PVD	ASLRS100	8059265686469
SUPERLEGGERO RS, stem, aluminium 7050, 110 mm, 82°, bolts titanium PVD	ASLRS110	8059265686476
SUPERLEGGERO RS, stem, aluminium 7050, 120 mm, 82°, bolts titanium PVD	ASLRS120	8059265686483
SUPERLEGGERO RS, stem, aluminium 7050, 130 mm, 82°, bolts titanium PVD	ASLRS130	8059265686490

Deda
Deda
Deda
Deda

SUPERLEGGERA

IT • La leggendaria Superleggera è il manubrio più leggero al mondo utilizzato dai Professionisti. Un design unico in puro stile Deda.

EN • The legendary Superleggera is the lightest handlebar used by Professional riders. A unique design in pure Deda style.

SUPERLEGGERA

Road

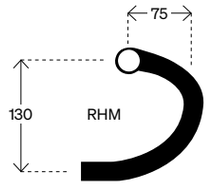

IT • Esclusiva grafica per l'iconico manubrio Superleggera Deda. La leggerezza alla guida. Realizzata con la rivoluzionaria fibra di carbonio unidirezionale HR40 e una speciale resina combinati insieme permettono di compattare lo spessore e di conseguenza il peso di questo manubrio garantendo le prestazioni tecniche più elevate. Curva RHM (Rapid Hand Movement) a geometria variabile per una presa perfetta e confortevole. Disponibile nella finitura Team e POB (Polish on black).

EN • Exclusive graphic design for the iconic Superleggera Deda handlebar. Lightness at the helm. Made of HR40 carbon fiber and an exclusive resin with unidirectional layup. Super compact composite and reduced weight to ensure the highest technical performance. RHM shape (Rapid Hand Movement) for the best grip and comfort. Available in Team and POB (Polish on black) finish.

Forma curva:
RHM Rapid Hand Movement
Materiale:
Monoscocca Carbonio HR40
Ø Manubrio:
31,7 mm
Profondità:
75 mm
Altezza:
130 mm
Misure:
42 • 44 • 46 cm (esterno - esterno)
Peso:
185 g (42 cm)
Finitura:
Team e POB (Polish on black)

Shape:
RHM Rapid Hand Movement
Material:
HR40 Full Carbon Costruction
Ø Handlebar:
31,7 mm
Reach:
75 mm
Drop:
130 mm
Sizes:
42 • 44 • 46 cm (outside to outside)
Weight:
185 g (42 cm)
Finish:
Team and POB (Polish on black)

↓ Description	↓ Deda Part Code	↓ EAN13 Code
Superleggera, Handlebar, Carbon, Ø 31.7, 42 cm, RHM, TEAM	SLHBTEAM42	8052783483312
Superleggera, Handlebar, Carbon, Ø 31.7, 44 cm, RHM, TEAM	SLHBTEAM44	8052783483336
Superleggera, Handlebar, Carbon, Ø 31.7, 46 cm, RHM, TEAM	SLHBTEAM46	8052783483350
Superleggera, Handlebar, Carbon, Ø 31.7, 42 cm, RHM, POB	SLHBPOB42	8052783483374
Superleggera, Handlebar, Carbon, Ø 31.7, 44 cm, RHM, POB	SLHBPOB44	8052783483398
Superleggera, Handlebar, Carbon, Ø 31.7, 46 cm, RHM, POB	SLHBPOB46	8052783483411

SUPERLEGGERO

Road

Finitura POB
POB Finish

Finitura TEAM
TEAM Finish

IT • L'attacco Superleggero ha un esclusiva grafica. Design senza compromessi. E' l'attacco più leggero al mondo utilizzato dai corridori professionisti. Attacco forgiato 3D in lega 7050 con viti titanio nere con trattamento PVD. Disponibile nella finitura Team e POB (Polish on black).

EN • The Superleggero stem has an exclusive graphic design. The lightest production stem used by professional riders. Alloy 7050 3D forged aluminum stem with PVD black titanium screws. Available in Team and POB (Polish on black) finish.

Materiale:
alluminio 7050
Viteria:
Titanio PVD nera
Angolo:
82°
Ø manubrio:
31,7 mm
Cannotto Forcella:
1 1/8" (28,6 mm)
Altezza attacco:
36 mm
Misure:
80 • 90 • 100 • 110 • 120 • 130 • 140 mm
Peso:
115 g (110 mm)
Finitura:
Team e POB (Polish on black)
Note:
Raccomandato solo per montaggio con manubri Deda in carbonio

Material:
Alloy 7050
Screws:
Titanium PVD black
Angle:
82°
Ø handlebar:
31,7 mm
fork Steerer:
1 1/8" (28,6 mm)
Clamp height:
36 mm
Sizes:
80 • 90 • 100 • 110 • 120 • 130 • 140 mm
Weight:
115 g (110 mm)
finish:
Team and POB (Polish on black)
Notes:
Recommended mounting with Deda carbon handlebars only

↓ Description	↓ Deda Part Code	↓ EAN13 Code
SUPERLEGGERO, stem, aluminium 7050, 80 mm, 82°, TEAM, bolts titanium PVD	SLSTTEAM080	8052783483077
SUPERLEGGERO, stem, aluminium 7050, 90 mm, 82°, TEAM, bolts titanium PVD	SLSTTEAM090	8052783483183
SUPERLEGGERO, stem, aluminium 7050, 100 mm, 82°, TEAM, bolts titanium PVD	SLSTTEAM100	8052783483190
SUPERLEGGERO, stem, aluminium 7050, 110 mm, 82°, TEAM, bolts titanium PVD	SLSTTEAM110	8052783483206
SUPERLEGGERO, stem, aluminium 7050, 120 mm, 82°, TEAM, bolts titanium PVD	SLSTTEAM120	8052783483213
SUPERLEGGERO, stem, aluminium 7050, 130 mm, 82°, TEAM, bolts titanium PVD	SLSTTEAM130	8052783483213
SUPERLEGGERO, stem, aluminium 7050, 140 mm, 82°, TEAM, bolts titanium PVD	SLSTTEAM140	8052783483237
SUPERLEGGERO, stem, aluminium 7050, 80 mm, 82°, POB, bolts titanium PVD	SLSTPOB080	8052783483244
SUPERLEGGERO, stem, aluminium 7050, 90 mm, 82°, POB, bolts titanium PVD	SLSTPOB090	8052783483251
SUPERLEGGERO, stem, aluminium 7050, 100 mm, 82°, POB, bolts titanium PVD	SLSTPOB100	8052783483268
SUPERLEGGERO, stem, aluminium 7050, 110 mm, 82°, POB, bolts titanium PVD	SLSTPOB110	8052783483275
SUPERLEGGERO, stem, aluminium 7050, 120 mm, 82°, POB, bolts titanium PVD	SLSTPOB120	8052783483282
SUPERLEGGERO, stem, aluminium 7050, 130 mm, 82°, POB, bolts titanium PVD	SLSTPOB130	8052783483299
SUPERLEGGERO, stem, aluminium 7050, 140 mm, 82°, POB, bolts titanium PVD	SLSTPOB140	8052783483305

Deda
PS
Deda

SUPERZERO RS

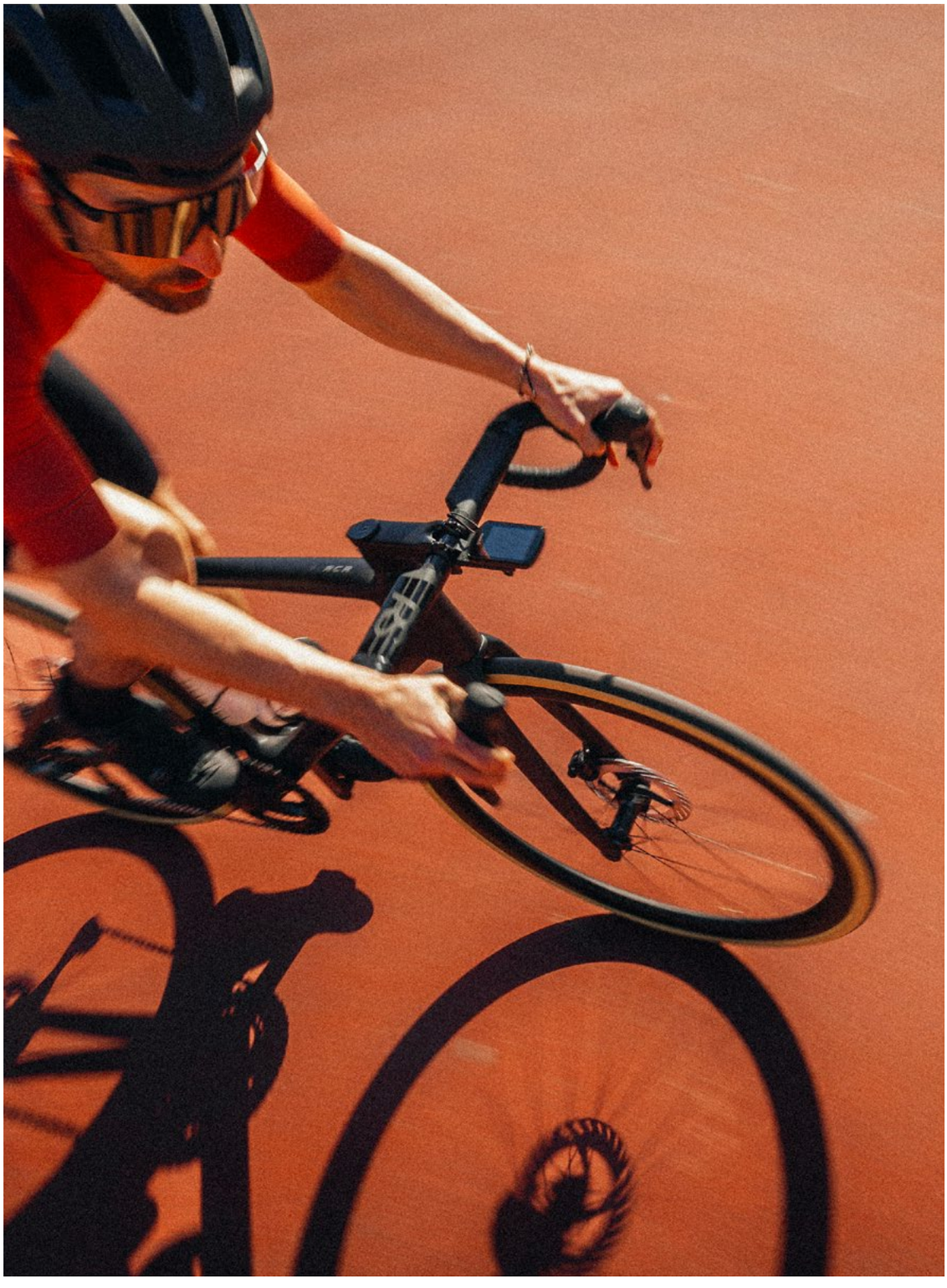

SUPERZERO RS Carbon

Road Gravel

Finitura POB
POB Finish

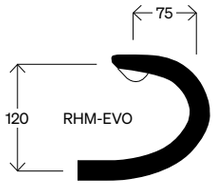

IT • Il manubrio Superzero nell'esclusiva versione RS. Più aerodinamico, leggero e rigido. È stato progettato per ridurre al minimo la resistenza all'aria e fornire un'impugnatura più ergonomica e confortevole. Il manubrio è caratterizzato dalla nuova forma RHM-EVO, l'evoluzione della geometria attuale con drop più compatto a 120 mm. Questo permette di tenere molto più a lungo la posizione in presa bassa con un aumento del comfort.
Il sistema DCR (Deda internal cable routing) permette la piena integrazione dei cavi all'interno del manubrio con qualsiasi telaio compatibile, ma è compatibile anche con il passaggio cavi semi-interno.
Foro centrale di uscita più grande per facilitare il montaggio dei cavi interni.
Disponibile in 4 taglie, dalla 40 alla 46 misurate esterno-esterno.

EN • The Superzero handlebar with the exclusive RS version.
More aerodynamic, lighter and stiffer. It has been designed to minimize air resistance and provide a more ergonomic and comfortable position.
The handlebar features the new RHM-EVO shape, the evolution of the current geometry with 120 mm more compact drop. This allows you to keep the low position much longer with an increase in comfort. The DCR (Deda internal cable routing) system allows the full integration of the cables inside the handlebar with any compatible frame, but it is also compatible with a semi-internal cable routing. Bigger central exit hole to facilitate the assembly of internal cables. Available in 4 sizes, from 40 to 46 measured outside to outside.

Forma:
RHM-EVO
Materiale:
Fibra di carbonio unidirezionale
Ø manubrio:
31,7 mm
Profondità:
75 mm
Altezza:
120 mm
Larghezza:
40 • 42 • 44 • 46 cm
Peso:
235 g (42 cm)
Finitura:
POB (Polish on black)
Note:
Compatibile con sistema DCR fino a 4 cavi; compatibile con tutte le prolunghe Deda.

Shape:
RHM-EVO
Material:
UD carbon fiber
Ø handlebar:
31,7 mm
Reach:
75 mm
Drop:
120 mm
Width:
40 • 42 • 44 • 46 cm
Weight:
235 g (42 cm)
Finish:
POB (Polish on black)
Note:
Compatible with DCR system up to 4 cables; compatible with all Deda extensions.

↓ Description	↓ Part Code	↓ EAN13 Code	↓ OEM Part Code	↓ EAN13 OEM Code
SUPERZERO RS, handlebar, carbon, Ø 31.7, 40 cm, RHM-EVO, POB	SZRSHB40	8055774360418	SZRSHB40X	8055774364928
SUPERZERO RS, handlebar, carbon, Ø 31.7, 42 cm, RHM-EVO, POB	SZRSHB42	8055774360425	SZRSHB42X	8055774364935
SUPERZERO RS, handlebar, carbon, Ø 31.7, 44 cm, RHM-EVO, POB	SZRSHB44	8055774360432	SZRSHB44X	8055774364942
SUPERZERO RS, handlebar, carbon, Ø 31.7, 46 cm, RHM-EVO, POB	SZRSHB46	8055774360449	SZRSHB46X	8055774364959

Confronto Superzero RS Carbon/Superzero
Superzero RS Carbon/Superzero comparison

Superzero RS

Vantaggi:
- Più aerodinamico
- Più leggero
- Più ergonomico

Advantages:
- More aero
- Lighter
- Better ergonomy

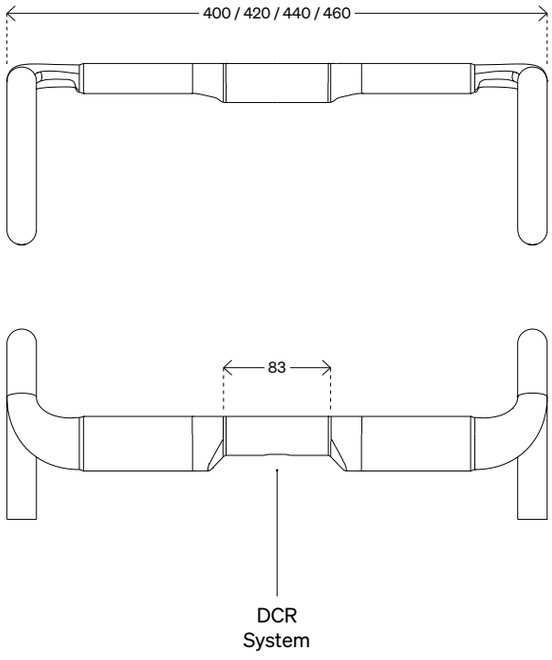

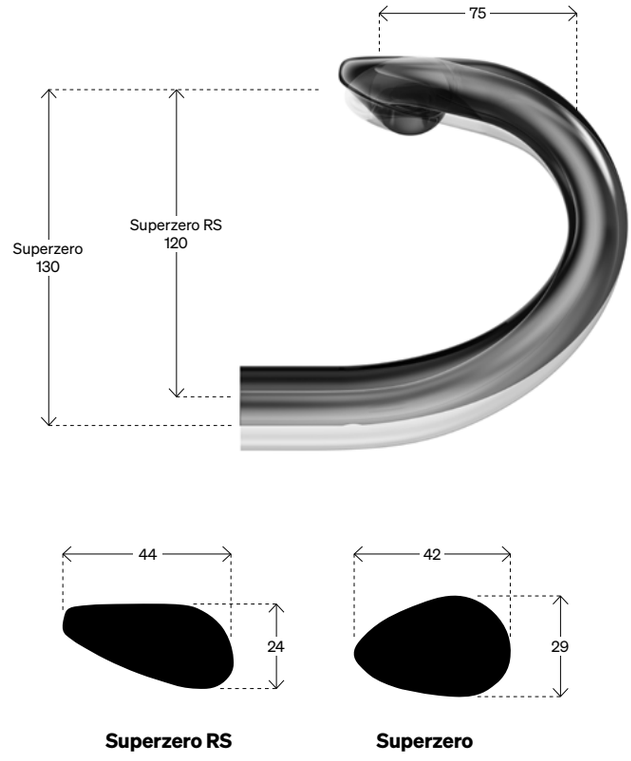

Deda
Deda
Deda
Deda

SUPERZERO RS

Road Gravel

Computer mount per gli attacchi Superzero RS e Superzero.
New Superbox computer mount for Superzero RS and Superzero stems.

IT • L'attacco Superzero nell'esclusiva finitura RS. La finitura dell'attacco ricalca quella del nuovo manubrio RS. Superzero è realizzato in alluminio 2014 con un innovativo processo di forgiatura 3D per ottenere un design completamente piatto. Rispetto alla versione standard l'attacco monta di serie speciali viti titanio con finitura nera PVD. In combinazione con il manubrio lo rende il kit aero più leggero sul mercato. Il porta computer è disponibile come accessorio e include 3 diversi inserti per Garmin (serie 500, 800, 1000), Bryton, Wahoo oltre all'aggancio GoPro. Il porta computer richiede l'utilizzo del nuovo frontalino disponibile come ricambio (codice FCSZ-MOUNT) per gli attacchi Superzero RS e Superzero.

EN • The Superzero stem in the exclusive RS finish. The stem finish perfectly matches the new Superzero RS handlebar. Superzero is made of 2014 aluminium series using an innovative 3D forging process to get a completely flat design. Compared to the standard version, the stem features special titanium screws with black PVD finish. The combination with the handlebar delivers the lightest aero kit on the market. The computer mount is available as accessory and includes 3 different inserts to fit Garmin (500, 800, 1000 series), Bryton, Wahoo and a specific GoPro mount. The mount requires the new Superzero RS and Superzero stem faceplate available as spare part (part code FCSZ-MOUNT).

Materiale:
Alluminio 2014
Viti:
Titanio, finitura PVD nera
Angolo:
82°
Ø manubrio:
31,7 mm
Cannotto forcella:
1 1/8" (28,6mm)
Altezza attacco:
36 mm
Misure:
90 • 100 • 110 • 120 • 130 mm
Peso:
140 g (110 mm)
Finitura:
POB (Polish on black)
Accessori inclusi:
Topcap con vite alluminio

Material:
Alloy 2014
Screws:
Titanium, black pvd finish
Angle:
82°
Ø handlebar:
31,7 mm
Fork steerer:
1 1/8" (28,6mm)
Clamp height:
36 mm
Sizes:
90 • 100 • 110 • 120 • 130 mm
Weight:
140 g (110 mm)
Finish:
POB (Polish on black)
Included accessories:
Aero topcap with alloy screw

↓ Description	↓ Deda Part Code	↓ EAN13 Code
SUPERZERO RS, stem, aluminium 2014, 90 mm, 82°, POB, bolts titanium PVD	SZRSST090	8055774360517
SUPERZERO RS, stem, aluminium 2014, 100 mm, 82°, POB, bolts titanium PVD	SZRSST100	8055774360524
SUPERZERO RS, stem, aluminium 2014, 110 mm, 82°, POB, bolts titanium PVD	SZRSST110	8055774360531
SUPERZERO RS, stem, aluminium 2014, 120 mm, 82°, POB, bolts titanium PVD	SZRSST120	8055774360548
SUPERZERO RS, stem, aluminium 2014, 130 mm, 82°, POB, bolts titanium PVD	SZRSST130	8055774360555

SUPERZERO RS Alloy

Road Gravel

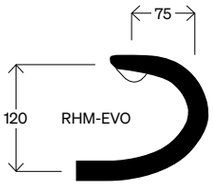

IT • Il manubrio Superzero RS Alloy rappresenta una soluzione performante per i ciclisti che cercano comfort, aerodinamica e un design all'avanguardia. L'angolo di apertura di 6° garantisce maggiore stabilità, anche su terreni più difficili. La forma RHM-EVO (Reach: 75 mm; Drop: 120 mm) offre una posizione comoda e una transizione rapida tra le leve dei freni e la presa bassa. Il sistema DCR (Deda Internal Cable Routing) consente la completa integrazione dei cavi all'interno del manubrio, compatibile con telai predisposti. Disponibile in cinque larghezze (36, 38, 40, 42, 44 cm), in finitura POB (Polish on black).

EN • The Superzero RS Alloy is an ideal choice for road cyclists seeking a balance of performance, style, and precision engineering. The 6° flare delivers improved stability, even on challenging terrain. The RHM-EVO Shape (Reach: 75 mm; Drop: 120 mm) ensures a comfortable riding position and seamless transitions between brake levers and the lower grip. The DCR system (Deda Internal Cable Routing) enables full cable integration within the handlebar, provided the frame supports this feature. Available in five widths (36, 38, 40, 42, 44 cm), in Polish on Black (POB) finish.

Forma curva:
RHM-EVO
Materiale:
Alluminio 7050
Ø Manubrio:
31,7 mm
Profondità:
75 mm
Altezza:
120 mm
Angolo Apertura:
6° (+ 2,5 cm)
Angolo esterno:
0°
Larghezza:
36 • 38 • 40 • 42 • 44 cm
(esterno-esterno)
Larghezza totale:
38,5 • 40,5 • 42,5 • 44,5 • 46,5 cm
(esterno-esterno)
Peso:
285 g (42 cm)
Finitura:
POB (Polish on black)
Note:
Compatibile DCR fino a 4 cavi; area centrale di 100 mm per il montaggio di accessori e prolunghe Deda (JET, Fast Pro e Parabolica Pro)

Shape:
RHM-EVO
Material:
Alloy 7050
Ø Handlebar:
31,7 mm
Reach:
75 mm
Drop:
120 mm
Flare:
6° (+ 2,5 cm)
Outsweep:
0°
Width:
36 • 38 • 40 • 42 • 44 cm
(outside - outside)
Full width:
38,5 • 40,5 • 42,5 • 44,5 • 46,5 cm
(outside - outside)
Weight:
285 g (42 cm)
Finish:
POB (Polish on black)
Notes:
DCR compatible up to 4 cables; 100mm clamp area for mounting accessories and Deda clip-on bars (JET, Fast Pro and Parabolica Pro)

↓ Description	↓ Part Code	↓ EAN13 Code	↓ OEM Part Code	↓ EAN13 OEM Code
SUPERZERO RS Alloy Handlebar, RHM-EVO, 36 cm, AL7050, POB finish, 6° flare	SZRSHBAL-36	8055774367967	SZRSHBAL-36X	8055774367974
SUPERZERO RS Alloy Handlebar, RHM-EVO, 38 cm, AL7050, POB finish, 6° flare	SZRSHBAL-38	8055774367981	SZRSHBAL-38X	8055774367998
SUPERZERO RS Alloy Handlebar, RHM-EVO, 40 cm, AL7050, POB finish, 6° flare	SZRSHBAL-40	8055774367943	SZRSHBAL-40X	8055774367950
SUPERZERO RS Alloy Handlebar, RHM-EVO, 42 cm, AL7050, POB finish, 6° flare	SZRSHBAL-42	8055774368001	SZRSHBAL-42X	8055774368018
SUPERZERO RS Alloy Handlebar, RHM-EVO, 44 cm, AL7050, POB finish, 6° flare	SZRSHBAL-44	8055774368025	SZRSHBAL-44X	8055774368032

Confronto Superzero RS Alloy/Superzero Alloy
Superzero RS Alloy/Superzero Alloy comparison

Superzero RS Alloy

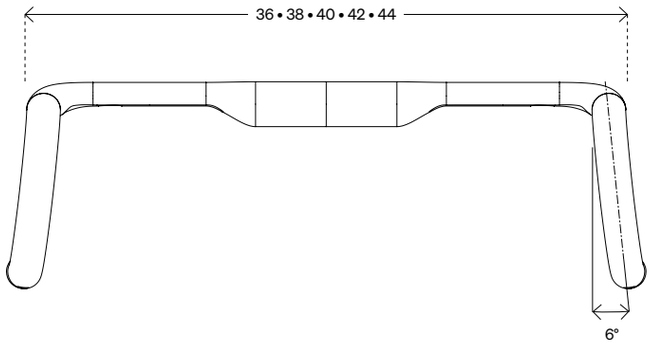

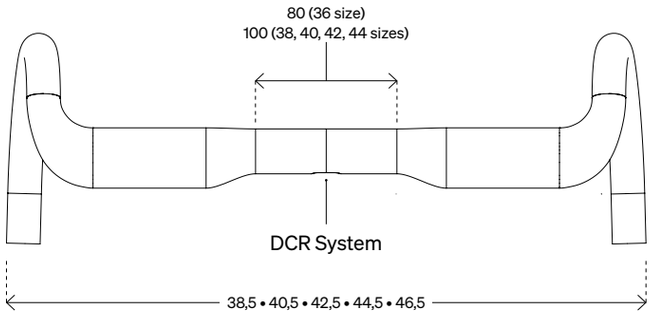

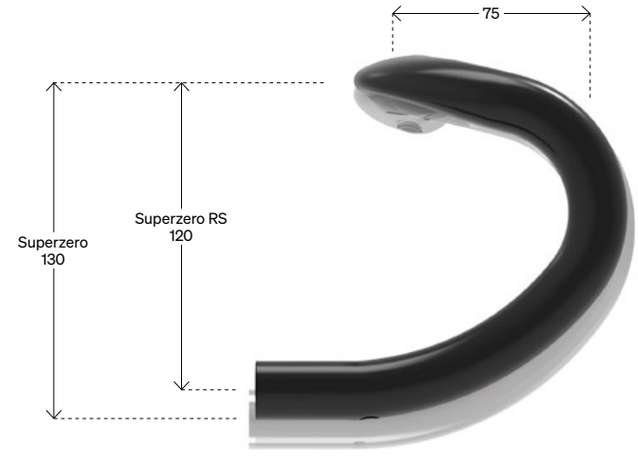

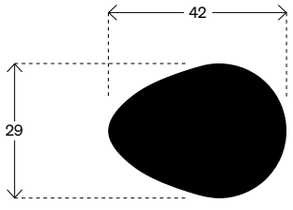

Superzero Alloy

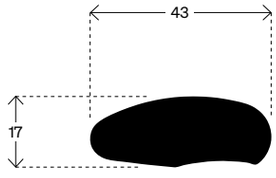

Superzero RS Alloy

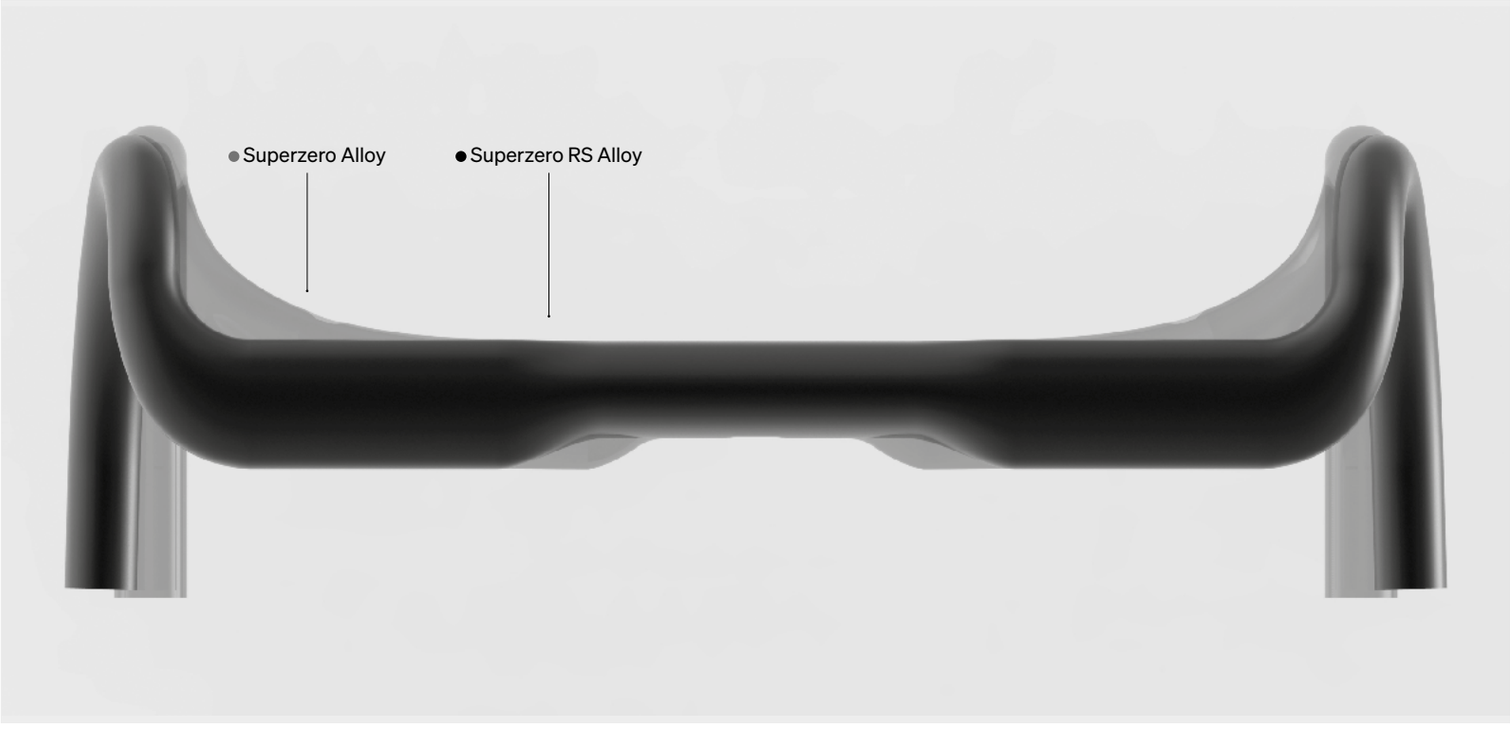

SUPERZERO Alloy DCR

Road Gravel

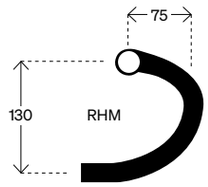

IT • La versione in alluminio del manubrio Superzero è prodotta con la lega 7050 di altissima gamma utilizzando un processo innovativo di formatura meccanica che permette di ottenere l'esatta forma della versione in carbonio. Il profilo aero e la sezione trasversale sono state disegnate per minimizzare la resistenza all'aria e per offrire allo stesso tempo una presa ergonomica per ogni stile di guida. Compatibile con passaggio cavi interno (sistema DCR) e montaggio cavi esterni. Il manubrio è caratterizzato dalla forma RHM per una presa ineguagliabile.

EN • Aluminum version of the Superzero handlebar. Made in high-end 7050 aluminum series using an innovative mechanical forming process that allows to obtain the exact aero shape of the carbon version. The bar aero profile and cross section have been designed to minimize the drag and provide an ergonomic grip for any riding style at the same time. Superzero alloy handlebar features also the modern RHM shape for an incomparable grip on the drops. Compatible with full internal cables routing (DCR system) and external cable routing. The handlebar features also the RHM shape for an incomparable grip on the drops.

Forma curva:
RHM Rapid Hand Movement
Materiale:
Alluminio 7050
Ø Manubrio:
31,7 mm
Profondità:
75 mm
Altezza:
130 mm
Misure:
40 • 42 • 44 • 46 cm (esterno - esterno)
Peso:
305 g (42 cm)
Finitura:
POB (Polish on Black)
Note:
Compatibile con passaggio cavi interno (fino a 4 cavi) e montaggio cavi esterni

Shape:
RHM Rapid Hand movement
Material:
7050 Aluminum Series
Ø Handlebar:
31,7 mm
Reach:
75 mm
Drop:
130 mm
Sizes:
40 • 42 • 44 • 46 cm (outside to outside)
Weight:
305 g (42 cm)
Finish:
POB (Polish on black)
Notes:
Compatible with full internal cables routing (up to 4 cables) and external cable routing

↓ Description	↓ Part Code	↓ EAN13 Code	↓ OEM Part Code	↓ EAN13 OEM Code
SUPERZERO DCR, handlebar, aluminium 7050, Ø 31.7, 40 cm, RHM, POB	ASZPOBN40V1	8052783484425	ASZPOBN40V1X	8052783484432
SUPERZERO DCR, handlebar, aluminium 7050, Ø 31.7, 42 cm, RHM, POB	ASZPOBN42V1	8052783484449	ASZPOBN42V1X	8052783484456
SUPERZERO DCR, handlebar, aluminium 7050, Ø 31.7, 44 cm, RHM, POB	ASZPOBN44V1	8052783484463	ASZPOBN44V1X	8052783484470
SUPERZERO DCR, handlebar, aluminium 7050, Ø 31.7, 46 cm, RHM, POB	ASZPOBN46V1	8052783484487	ASZPOBN46V1X	8052783484494

SUPERZERO

Road Gravel

Finitura POB
POB Finish

Nuovo computer mount per gli attacchi Superzero RS e Superzero
Il porta computer è disponibile come accessorio e include 3 diversi inserti per Garmin (serie 500, 800, 1000), Bryton, Wahoo oltre all'aggancio GoPro. Il porta computer richiede l'utilizzo del nuovo frontalino disponibile come ricambio (codice FCSZ-MOUNT) per gli attacchi Superzero RS e Superzero.

New Superbox computer mount for Superzero RS and Superzero stems.
The computer mount is available as accessory and includes 3 different inserts to fit Garmin (500, 800, 1000 series), Bryton, Wahoo and a specific GoPro mount. The mount requires the new Superzero RS and Superzero stem faceplate available as spare part (part code FCSZ-MOUNT).

IT • L'attacco Superzero è la perfetta combinazione di rigidità, leggerezza e forma aerodinamica. La sezione superiore piatta garantisce un migliore rendimento aerodinamico e allo stesso tempo valori superiori di rigidità. Progettato per i corridori più esigenti, Superzero è realizzato in alluminio 2014 con un innovativo processo di forgiatura 3D. Il design è completato da un coperchietto aero dedicato per l'attacco.

EN • The Superzero stem is the perfect combination of stiffness, lightness and aero shape. The flat top section of the stem results in a better aero performance and guarantees at the same time higher stiffness values. Designed for the most exigent riders, Superzero is made in 2014 aluminum series using an innovative 3D forging process. The stem design features a dedicated aero top cap.

Materiale:
Alluminio 2014
Viteria:
Acciaio, nera
Angolo:
82°
Ø Manubrio:
31,7 mm
Cannotto Forcella:
1 1/8" (28,6mm)
Altezza attacco:
36 mm
Misure:
90 • 100 • 110 • 120 • 130 • 140 mm
Peso:
145 g (110 mm)
Finitura:
POB (Polish on Black)
Note:
Raccomandato solo per montaggio con curve manubrio Deda

Material:
Alloy 2014
Screws:
Steel, black
Angle:
82°
Ø Handlebar:
31,7 mm
Fork Steerer:
1 1/8" (28,6mm)
Clamp Height:
36 mm
Sizes:
90 • 100 • 110 • 120 • 130 • 140 mm
Weight:
145 g (110 mm)
Finish:
POB (Polish on Black)
Notes:
Recommended mounting with Deda handlebars only

Superzero Aero Topcap
Incluso solo nella versione After-Market.
Included in the After-Market version only.
(Deda Part code HDSZTP)

↓ Description	↓ Part Code	↓ EAN13 Code	↓ OEM Part Code	↓ EAN13 OEM Code
SUPERZERO, stem, aluminium 2014, 90 mm, 82°, POB, bolts titanium PVD	ASZPOBN090	8052783480359	/	/
SUPERZERO, stem, aluminium 2014, 100 mm, 82°, POB, bolts titanium PVD	ASZPOBN100	8052783480373	/	/
SUPERZERO, stem, aluminium 2014, 110 mm, 82°, POB, bolts titanium PVD	ASZPOBN110	8052783480397	/	/
SUPERZERO, stem, aluminium 2014, 120 mm, 82°, POB, bolts titanium PVD	ASZPOBN120	8052783480410	/	/
SUPERZERO, stem, aluminium 2014, 130 mm, 82°, POB, bolts titanium PVD	ASZPOBN130	8052783480434	/	/
SUPERZERO, stem, aluminium 2014, 140 mm, 82°, POB, bolts titanium PVD	ASZPOBN140	8052783480458	/	/
SUPERZERO, OEM, stem, aluminium 2014, 90 mm, 82°, POB, bolts titanium PVD	/	/	ASZPOBN090X	8052783480366
SUPERZERO, OEM, stem, aluminium 2014, 100 mm, 82°, POB, bolts titanium PVD	/	/	ASZPOBN100X	8052783480380
SUPERZERO, OEM, stem, aluminium 2014, 110 mm, 82°, POB, bolts titanium PVD	/	/	ASZPOBN110X	8052783480403
SUPERZERO, OEM, stem, aluminium 2014, 120 mm, 82°, POB, bolts titanium PVD	/	/	ASZPOBN120X	8052783480427
SUPERZERO, OEM, stem, aluminium 2014, 130 mm, 82°, POB, bolts titanium PVD	/	/	ASZPOBN130X	8052783480441
SUPERZERO, OEM, stem, aluminium 2014, 140 mm, 82°, POB, bolts titanium PVD	/	/	ASZPOBN140X	8052783480465

good hand movement
Deda
ZERO100

ZERO100

ZERO100 RHM

Road Gravel

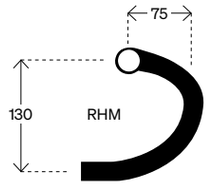

IT • Dalla sua introduzione nel 2006, la serie Zero100 è stata per lungo tempo sinonimo del più alto livello di performance. Abbiamo visto campioni vincere le più prestigiose corse ma più di tutto, la scelta di tantissimi ciclisti entusiasti. Oggi è ancora una delle serie Deda più apprezzata e venduta. Il manubrio Zero100 RHM è realizzato con la prestigiosa serie alluminio 7075 per un peso leggerissimo di 248 grammi nella taglia 42. Disponibile in molte larghezze da 38 al 46 cm misurate esterno-esterno.

EN • Since the introduction in 2006, Zero100 series has long been synonymous with the highest level of performance. We have seen champions winning the most prestigious races but above all, the choice of many enthusiastic cyclists. Today this is still one of Deda's best seller series. The Zero100 RHM handlebar is made up of the premium 7075 aluminium for an incredible light weight of 248 grams in size 42. Available in many widths from 38 to 46 cm measured outside to outside.

Forma curva:
RHM Rapid Hand Movement
Materiale:
Alluminio 7050 a triplo spessore
Ø Manubrio:
31,7 mm
Profondità:
75 mm
Altezza:
130 mm
Misure:
38 • 40 • 42 • 44 • 46 cm
(esterno - esterno)
Peso:
248 g (42 cm)
Finitura:
BOB (Black on Black)

Shape:
RHM Rapid Hand Movement
Material:
Triple butted Alloy 7050
Ø Handlebar:
31,7 mm
Reach:
75 mm
Drop:
130 mm
Sizes:
38 • 40 • 42 • 44 • 46 cm
(outside - outside)
Weight:
248 g (42 cm)
Finish:
BOB (Black on Black)

↓ Description	↓ Part Code	↓ EAN13 Code	↓ OEM Part Code	↓ EAN13 OEM Code
ZERO100, handlebar, aluminium 7075, Ø 31.7, 38 cm, RHM, BOB	D100BOB38	8059265687701	D100BOB38X	8059265687756
ZERO100, handlebar, aluminium 7075, Ø 31.7, 40 cm, RHM, BOB	D100BOB40	8059265687718	D100BOB40X	8059265687763
ZERO100, handlebar, aluminium 7075, Ø 31.7, 42 cm, RHM, BOB	D100BOB42	8059265687725	D100BOB42X	8059265687770
ZERO100, handlebar, aluminium 7075, Ø 31.7, 44 cm, RHM, BOB	D100BOB44	8059265687732	D100BOB44X	8059265687787
ZERO100, handlebar, aluminium 7075, Ø 31.7, 46 cm, RHM, BOB	D100BOB46	8059265687749	D100BOB46X	8059265687794

ZERO100 Shallow

Road

Finitura BOB
BOB Finish

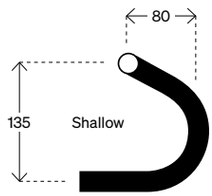

IT • Il manubrio classico per definizione, la forma Shallow o rotonda all'italiana ha scritto la storia di questo fantastico sport. Utilizzata dai campioni di ieri e da alcuni degli attuali leader di Giro e Tour, questa curva da manubrio continua a funzionare perché i ciclisti la conoscono e la trovano comoda. Lo Shallow ha una classica curva rotonda con una profondità di 80 mm e un'altezza di 135 mm. Realizzato in leggero alluminio 7075 il manubrio pesa solo 250 g. Disponibile nelle taglie 42 e 44 misurate da esterno a esterno.

EN • The classic handlebar by definition, the Shallow or Italian shape has written the story of this fantastic sport. Used by the yesterday's champions and some of current leaders of Giro and Tour, this handlebar bend continue to work because cyclists know and find it comfortable. The Shallow has a classic round bend featuring a 80 mm reach and 135 mm drop. Made in light 7075 aluminium the handlebar weights only 250 g. Available in size 42 and 44 measured outside to outside.

Forma curva:
Shallow. Rotonda all'Italiana
Materiale:
Alluminio 7075 a triplo spessore
Ø Manubrio:
31,7 mm
Profondità:
80 mm
Altezza:
135 mm
Misure:
42 • 44 cm (esterno - esterno)
Peso:
252 g (42 cm)
Finitura:
BOB (Black on Black)

Shape:
Shallow
Material:
Triple butted Alloy 7075
Ø Handlebar:
31,7 mm
Reach:
80 mm
Drop:
135 mm
Sizes:
42 • 44 cm (outside - outside)
Weight:
252 g (42 cm)
Finish:
BOB (Black on Black)

↓ Description	↓ Deda Part Code	↓ EAN13 Code
ZERO100 SHALLOW, handlebar, aluminium 7075, Ø 31.7, 42 cm, BOB	D100SBOB42	8055774364669
ZERO100 SHALLOW, handlebar, aluminium 7075, Ø 31.7, 44 cm, BOB	D100SBOB44	8055774364676

ZERO100 Deep

Road

Finitura BOB
BOB Finish

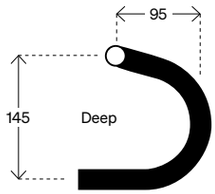

IT • La Zero100 Deep è una curva rotonda tradizionale in stile belga che offre più spazio per le braccia quando si scatta fuori dalla sella rispetto a qualsiasi altra forma di manubrio da strada. La forma Deep è per chi ama essere basso e aerodinamico, per questo motivo era molto popolare in pista. Ha una profondità di 95 mm e un'altezza di 145 mm. Realizzato in alluminio 7075 il manubrio pesa solo 250 g. Disponibile nelle taglie 42 e 44 misurate da esterno a esterno.

EN • The Zero100 Deep is a traditional Belgian-style round bend that provides more clearance for the arms when sprinting out of the saddle than any other road bar shape. The Deep bend is for riders who like to get low and aero, for this reason was very popular in track. Features a 95 mm reach and 145 mm drop. Made in 7075 aluminium the handlebar weights only 250 g. Available in size 42 and 44 measured outside to outside.

Forma curva:
Deep. Rotonda alla belga
Materiale:
Alluminio 7075 a triplo spessore
Ø Manubrio:
31,7 mm
Profondità:
95 mm
Altezza:
145 mm
Misure:
42 • 44 cm (esterno - esterno)
Peso:
254 g (42 cm)
Finitura:
BOB (Black on Black)

Shape:
Deep
Material:
Triple butted Alloy 7075
Ø Handlebar:
31,7 mm
Reach:
75 mm
Drop:
130 mm
Sizes:
42 • 44 cm (outside - outside)
Weight:
254 g (42 cm)
Finish:
BOB (Black on Black)

↓ Description	↓ Deda Part Code	↓ EAN13 Code
ZERO100 DEEP, handlebar, aluminium 7075, Ø 31.7, 42 cm, BOB	D100DBOB42	8055774364690
ZERO100 DEEP, handlebar, aluminium 7075, Ø 31.7, 44 cm, BOB	D100DBOB44	8055774364706

ZERO100 Anatomic

Road

Finitura BOB
BOB Finish

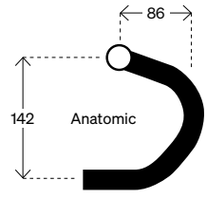

IT • La Zero100 Anatomica è un curva con raggio variabile per chi ama l'ergonomia impugnando il manubrio in posizioni fisse. Ha una profondità di 86 mm e un'altezza di 142 mm. Realizzato in alluminio 7075 il manubrio pesa solo 250 g. Disponibile nelle taglie 42 e 44 misurate da esterno a esterno.

EN • The Zero100 Anatomic handlebar is a bend with variable radius for people who like ergonomic drops holding the handlebar in fixed positions. Features a 86 mm reach and 142 mm drop. Made in 7075 aluminium the handlebar weights only 250 g. Available in size 42 and 44 measured outside to outside.

Forma curva:
Anatomica
Materiale:
Alluminio 7075 a triplo spessore
Ø Manubrio:
31,7 mm
Profondità:
86 mm
Altezza:
142 mm
Misure:
42 • 44 cm (esterno - esterno)
Peso:
258 g (42 cm)
Finitura:
BOB (Black on Black)

Shape:
Anatomic
Material:
Triple butted Alloy 7075
Ø Handlebar:
31,7 mm
Reach:
86 mm
Drop:
142 mm
Sizes:
42 • 44 cm (outside - outside)
Weight:
258 g (42 cm)
Finish:
BOB (Black on Black)

↓ Description	↓ Deda Part Code	↓ EAN13 Code
ZERO100 ANATOMIC, handlebar, aluminium 7075, Ø 31.7, 42 cm, BOB	D100ABOB42	8055774364720
ZERO100 ANATOMIC, handlebar, aluminium 7075, Ø 31.7, 44 cm, BOB	D100DBOB44	8055774364737

ZERO100

Road Gravel

Finitura BOB
BOB Finish

Compatibile con S-DCR Cover Kit. Vedi pagina 13.
Compatible with S-DCR Cover kit. See page 13.

IT • L'attacco Zero100 è estremamente versatile perché unisce leggerezza, resistenza e affidabilità. È la scelta perfetta per bici sportive o endurance, ma anche una delle scelte preferite dai ciclisti Professionisti. Progettato e prodotto in alluminio 2014, l'attacco ha un angolo da 82 gradi con misure disponibili da 80 a 140 mm per adattarsi a qualsiasi posizione. Disponibile in finitura BOB (Black on Black).

EN • Zero100 stem is extremely versatile because combines lightweight, strength and reliability. It is the perfect choice for sportive or endurance bikes but also one of the preferred choices of Pro riders. Designed and manufactured in 2014 alloy series, the stem features a 82 degrees angle with a wide size options from 80 to 140mm to suit any position.
Available in BOB (Black on Black) finish.

Materiale:
Alluminio 2014, forgiato 3D
Viteria:
CrMo
Angolo:
82°
Ø Manubrio:
31,7 mm
Cannotto Forcella:
1 1/8" (28,6 mm)
Altezza attacco:
40 mm
Misure:
80 • 90 • 100 • 110 • 120 • 130 • 140 mm
Peso:
126 g (110 mm)
Finitura:
BOB (Black on Black)

Material:
3D forged, alloy 2014
Screws:
CrMo
Angle:
82°
Ø Handlebar:
31,7 mm
Fork Steerer:
1 1/8" (28,6 mm)
Clamp Height:
40 mm
Sizes:
80 • 90 • 100 • 110 • 120 • 130 • 140 mm
Weight:
126 g (110 mm)
Finish:
BOB (Black on Black)

↓ Description	↓ Part Code	↓ EAN13 Code	↓ OEM Part Code	↓ EAN13 OEM Code
ZERO100, stem, aluminium 2014, 80 mm, 82°, BOB, bolts steel	D100BOB080	8059265687466	D100BOB080X	8059265687534
ZERO100, stem, aluminium 2014, 90 mm, 82°, BOB, bolts steel	D100BOB090	8059265687473	D100BOB090X	8059265687541
ZERO100, stem, aluminium 2014, 100 mm, 82°, BOB, bolts steel	D100BOB100	8059265687480	D100BOB100X	8059265687558
ZERO100, stem, aluminium 2014, 110 mm, 82°, BOB, bolts steel	D100BOB110	8059265687497	D100BOB110X	8059265687565
ZERO100, stem, aluminium 2014, 120 mm, 82°, BOB, bolts steel	D100BOB120	8059265687503	D100BOB120X	8059265687572
ZERO100, stem, aluminium 2014, 130 mm, 82°, BOB, bolts steel	D100BOB130	8059265687510	D100BOB130X	8059265687589
ZERO100, stem, aluminium 2014, 140 mm, 82°, BOB, bolts steel	D100BOB140	8059265687527	D100BOB140X	8059265687596

ZERO100 Team 70°

Road Gravel

Finitura BOB
BOB Finish

IT • Versione Team del classico attacco Zero100 con angolo 70 gradi (-20°) per i corridori più esigenti alla ricerca di una posizione perfetta in bici. Misure disponibili da 90 a 140 mm per adattarsi a qualsiasi posizione. Disponibile in finitura BOB (Black on Black).

EN •Team version of the classic Zero100 stem with 70 degree angle (-20°) for the most demanding riders looking for a perfect position on the bike. Sizes available from 90 to 140 mm to adapt to any position. Available in BOB (Black on Black) finish.

Materiale:
Alluminio 2014, forgiato 3D
Viteria:
CrMo
Angolo:
70°
Ø Manubrio:
31,7 mm
Cannotto Forcella:
1 1/8" (28,6 mm)
Altezza attacco:
40 mm
Misure:
90 • 100 • 110 • 120 • 130 • 140 mm
Peso:
126 g (110 mm)
Finitura:
BOB (Black on Black)

Material:
3D forged, alloy 2014
Screws:
CrMo
Angle:
70°
Ø Handlebar:
31,7 mm
Fork Steerer:
1 1/8" (28,6 mm)
Clamp Height:
40 mm
Sizes:
90 • 100 • 110 • 120 • 130 • 140 mm
Weight:
126 g (110 mm)
Finish:
BOB (Black on Black)

↓ Description	↓ Deda Part Code	↓ EAN13 Code
ZERO100 TEAM, stem, aluminium 2014, 90 mm, 70°, BOB, bolts steel	D100T090-BOB	8055774366335
ZERO100 TEAM, stem, aluminium 2014, 100 mm, 70°, BOB, bolts steel	D100T100-BOB	8055774366342
ZERO100 TEAM, stem, aluminium 2014, 110 mm, 70°, BOB, bolts steel	D100T110-BOB	8055774366359
ZERO100 TEAM, stem, aluminium 2014, 120 mm, 70°, BOB, bolts steel	D100T120-BOB	8055774366366
ZERO100 TEAM, stem, aluminium 2014, 130 mm, 70°, BOB, bolts steel	D100T130-BOB	8055774366373
ZERO100 TEAM, stem, aluminium 2014, 140 mm, 70°, BOB, bolts steel	D100T140-BOB	8055774366380

ZERO100 12 mm

Road Gravel

Finitura BOB
BOB Finish

Compatibile col kit montaggio luci al reggisella, *Staffa*. Vedi pagina 216.
Compatible with *Staffa* seatpost lights mount kit. See page 216.

DBA (For Shimano Di2)

Ø 27,2 mm | Ø 31,6 mm

IT • ZERO100 è un reggisella superleggero di soli 250 grammi che fornisce allo stesso tempo il massimo livello di rigidità e affidabilità. Il reggisella è realizzato in un unico pezzo utilizzando un processo di forgiatura 3D e presenta lo stesso innovativo sistema di bloccaggio a 1 bullone del modello Superleggero per consentire un montaggio facile e veloce. Regolazione micrometrica dell'inclinazione della sella attraverso une vite posizionata sulla testa del reggisella. Il reggisella presenta un arretramento di 12 mm e è disponibile in due diametri, 27.2 e 31.6 mm.

EN • ZERO100 is a superlight seatpost of 250 grams only providing at the same time the highest level of stiffness and reliability. The seatpost is manufactured in one piece using a 3D forging process and features the same innovative 1-bolt clamp system of Superleggero model to allow an easy and fast assembly. A fine adjustment of the saddle inclination is possible through the adjusting screw on the seatpost head. The seatpost features a 12 mm setback and is available in two diameters, 27.2 and 31.6 mm.

Materiale:
Alluminio 7050 forgiato 3D
Lunghezza:
350 mm
Diametro:
Ø 27,2 • 31,6 mm
Arretramento:
12 mm
Peso:
259 g (Ø 31,6 mm)
Finitura:
BOB (Black on Black)
Note:
Compatibile con adattatori Deda per batteria interna DI2

Material:
Alloy 7050 3D forged
Length:
350 mm
Diameter:
Ø 27,2 • 31,6 mm
Setback:
12 mm
Weight:
259 g (Ø 31,6 mm)
Finish:
BOB (Black on Black)
Notes:
Compatible with deda adapter for DI2 internal battery

↓ Description	↓ Part Code	↓ EAN13 Code	↓ OEM Part Code	↓ EAN13 OEM Code
ZERO100, seatpost, aluminium 7050, Ø 27.2×350 mm, setback 12 mm, BOB, bolts steel	D100BOB27	8059265687930	D100BOB27X	8059265687947
ZERO100, seatpost, aluminium 7050, Ø 31.6×350 mm, setback 12 mm, BOB, bolts steel	D100BOB31	8059265687954	D100BOB31X	8059265687961

ZERO100 0 mm

Road Gravel

Finitura BOB
BOB Finish

Compatibile col kit montaggio luci al reggisella, *Staffa*. Vedi pagina 216.
Compatible with *Staffa* seatpost lights mount kit. See page 216.

DBA (For Shimano Di2)

Ø 27,2 mm | Ø 31,6 mm

IT • ZERO100 è un reggisella superleggero di soli 250 grammi che fornisce allo stesso tempo il massimo livello di rigidità e affidabilità. Il reggisella è realizzato in un unico pezzo utilizzando un processo di forgiatura 3D e presenta lo stesso innovativo sistema di bloccaggio a 1 bullone del modello Superleggero per consentire un montaggio facile e veloce. Regolazione micrometrica dell'inclinazione della sella attraverso une vite posizionata sulla testa del reggisella. Il reggisella presenta un arretramento di 0 mm e è disponibile in due diametri, 27.2 e 31.6 mm.

EN • ZERO100 is a superlight seatpost of 250 grams only providing at the same time the highest level of stiffness and reliability. The seatpost is manufactured in one piece using a 3D forging process and features the same innovative 1-bolt clamp system of Superleggero model to allow an easy and fast assembly. A fine adjustment of the saddle inclination is possible through the adjusting screw on the seatpost head. The seatpost features a 0 mm setback and is available in two diameters, 27.2 and 31.6 mm.

Materiale:
Alluminio 2014 forgiato 3D
Lunghezza:
350 mm
Diametro:
Ø 27,2 • 31,6 mm
Arretramento:
0 mm
Peso:
259 g (Ø 31,6 mm)
Finitura:
BOB (Black on Black)
Note:
Compatibile con adattatori Deda per batteria interna DI2

Material:
Alloy 2014 3D forged
Length:
350 mm
Diameter:
Ø 27,2 • 31,6 mm
Setback:
0 mm
Weight:
259 g (Ø 31,6 mm)
Finish:
BOB (Black on Black)
Notes:
Compatible with Deda adapter for DI2 internal battery

↓ Description	↓ Deda Part Code	↓ EAN13 Code
ZERO100, seatpost, aluminium 7050, Ø 27.2×350 mm, setback 0 mm, BOB, bolts steel	D100ZBOB27	8052783482513
ZERO100, seatpost, aluminium 7050, Ø 31.6×350 mm, setback 0 mm, BOB, bolts steel	D100ZBOB31	8052783482520

ZERO

ZERO2

ZERO2 DCR

Road Gravel

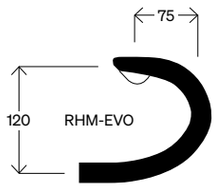

IT • Manubrio Zero 2 con sistema DCR (Deda internal cable routing) caratterizzato dalla curva RHM-EVO per un confort ineguagliabile nella presa bassa. Garantisce un'integrazione completa dei cavi all'interno del manubrio. Il manubrio ha una sezione aero nella parte superiore. Realizzato in lega di alluminio 6061, trafilata a doppio spessore. Disponibile in finitura POB (polish on black). Ora disponibile anche in misura 36.

EN • Zero 2 handlebar with DCR system (Deda Internal Cable Routing) features the RHM-EVO shape for an incomparable grip on the drops. The handlebar allows the full integration of the cables and features an aero top cross section. Made in light alloy 6061, double butted cold drawn. Available in POB (Polish on black) finish. Now available in size 36.

Forma curva:
RHM-EVO
Materiale:
Alluminio 6061 a doppio spessore
Ø Manubrio:
31,7 mm
Profondità:
75 mm
Altezza:
120 mm
Misure:
36 • 38 • 40 • 42 • 44 • 46 cm
(esterno - esterno)
Peso:
330 g (42 cm)
Finitura:
POB (Polish on black)
Note: Compatibile con passaggio cavi interno (fino a 4 cavi)

Shape:
RHM-EVO
Material:
Double butted Alloy 6061
Ø Handlebar:
31,7 mm
Reach:
75 mm
Drop:
120 mm
Sizes:
36 • 38 • 40 • 42 • 44 • 46 cm
(outside - outside)
Weight:
330 g (42 cm)
Finish:
POB (Polish on black)
Notes: Compatible with full internal cables routing (up to 4 cables)

↓ Description	↓ Part Code	↓ EAN13 Code
NEW ZERO2 DCR, handlebar, aluminium 6061, 36 cm, RHM-EVO, POB	Z2HBDCR36X	8055774367745
ZERO2 DCR, handlebar, aluminium 6061, 38 cm, RHM-EVO, POB	Z2HBDCR38X	8055774365901
ZERO2 DCR, handlebar, aluminium 6061, 40 cm, RHM-EVO, POB	Z2HBDCR40X	8052783489772
ZERO2 DCR, handlebar, aluminium 6061, 42 cm, RHM-EVO, POB	Z2HBDCR42X	8052783489789
ZERO2 DCR, handlebar, aluminium 6061, 44 cm, RHM-EVO, POB	Z2HBDCR44X	8052783489796
ZERO2 DCR, handlebar, aluminium 6061, 46 cm, RHM-EVO, POB	Z2HBDCR46X	8052783489802

ZERO2

Road Gravel

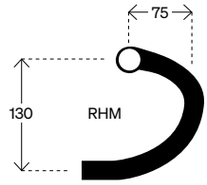

IT • Il manubrio Zero 2 ha una sezione leggermente aerodinamica, creando una piacevole presa quando non si è sulle leve. Presenta la famosa forma RHM (Rapid Hand Movement) ed è per i ciclisti che vogliono passare dalla presa alta a quella bassa regolarmente e comodamente. Realizzato in alluminio 6061 a doppio spessore con passacavi standard anteriore e posteriore. La finitura lucida aggiunge un tocco di classe per un manubrio di alta gamma a un prezzo competitivo. Disponibile in tre misure da 42 cm a 46 cm con finitura POB (Polish on black).

EN • The Zero 2 handlebar bar has a slightly aero cross-section, creating a pleasant grip when not on the hoods. It features the famous RHM shape (Rapid Hand Movement) and is for riders who want to switch from the tops to the drops, regularly and comfortably. Made in double butted 6061 aluminium with standard cable groves front and rear. The gloss finish adds a touch of class for a high-end handlebar at competitive price. Available in three sizes from 42 cm to 46 cm, the handlebar comes with POB (Polish on black) finish.

Forma curva:
RHM Rapid Hand Movement
Materiale:
Alluminio 6061 a doppio spessore
Ø Manubrio:
31,7 mm
Profondità:
75 mm
Altezza:
130 mm
Misure:
42 • 44 • 46 cm (esterno - esterno)
Peso:
295 g (42 cm)
Finitura:
POB (Polish on black)

Shape:
RHM Rapid Hand Movement
Material:
Double butted Alloy 6061
Ø Handlebar:
31,7 mm
Reach:
75 mm
Drop:
130 mm
Sizes:
42 • 44 • 46 cm (outside - outside)
Weight:
295 g (42 cm)
Finish:
POB (Polish on black)

↓ Description	↓ Part Code	↓ EAN13 Code	↓ OEM Part Code	↓ EAN13 OEM Code
ZERO2, handlebar, aluminium 6061, 42 cm, RHM, POB	Z2POB42	8052783481172	Z2POB42X	8052783481189
ZERO2, handlebar, aluminium 6061, 44 cm, RHM, POB	Z2POB44	8052783481196	Z2POB44X	8052783481202
ZERO2, handlebar, aluminium 6061, 46 cm, RHM, POB	Z2POB46	8052783481219	Z2POB46X	8052783481226

ZERO2

Road Gravel

Finitura POB
POB Finish

Compatibile con S-DCR Cover Kit. Vedi pagina 13.
Compatible with S-DCR Cover kit. See page 13.

IT • L'attacco Zero2 è un perfetto compromesso tra design e ingegnerizzazione. L'attacco è disponibile in una gamma ampia di misure da 50 a 130 mm. Questo rende lo Zero2 la scelta perfetta anche per bike fitters che aiutano i ciclisti a trovare la migliore posizione sulla bicicletta. L'attacco manubrio Zero2 è perfetto per le bici da corsa endurance o da competizione ad un prezzo accessibile. Disponibile nella finitura POB (Polish on black).

EN • The Zero2 stem is a perfect balance between engineering and design. The stem is available in a wide range of sizes from 50 to 130 mm. This makes the Zero2 stem the perfect choice also for bike fitters helping cyclists to find the best position on the bike. The Zero2 stem is suitable for high performance bikes at an affordable price. Available in POB (Polish on black) finish.

Materiale:
Alluminio 6061, forgiato 3D
Viteria:
Acciaio, Nera
Angolo:
83°
Ø Manubrio:
31,7 mm
Cannotto Forcella:
1 1/8" (28,6mm)
Altezza attacco:
38 mm
Misure:
50 • 60 • 70 • 80 • 90 •
100 • 110 • 120 • 130 mm
Peso:
140 g (110 mm)
Finitura:
POB (Polish on black)

Material:
6061 alloy, 3D forged
Screws:
Steel, Black
Angle:
83°
Ø Handlebar:
31,7 mm
Fork Steerer:
1 1/8" (28,6mm)
Clamp Height:
38 mm
Sizes:
50 • 60 • 70 • 80 • 90 •
100 • 110 • 120 • 130 mm
Weight:
140 g (110 mm)
Finish:
POB (Polish on black)

↓ Description	↓ Part Code	↓ EAN13 Code	↓ OEM Part Code	↓ EAN13 OEM Code
ZERO2, stem, aluminium 6061, 50 mm, 83°, POB, bolts steel	Z2POB050	8052783480953	Z2POB050X	8052783480960
ZERO2, stem, aluminium 6061, 60 mm, 83°, POB, bolts steel	Z2POB060	8052783480977	Z2POB060X	8052783480984
ZERO2, stem, aluminium 6061, 70 mm, 83°, POB, bolts steel	Z2POB070	8052783480991	Z2POB070X	8052783481004
ZERO2, stem, aluminium 6061, 80 mm, 83°, POB, bolts steel	Z2POB080	8052783481011	Z2POB080X	8052783481028
ZERO2, stem, aluminium 6061, 90 mm, 83°, POB, bolts steel	Z2POB090	8052783481035	Z2POB090X	8052783481042
ZERO2, stem, aluminium 6061, 100 mm, 83°, POB, bolts steel	Z2POB100	8052783481059	Z2POB100X	8052783481066
ZERO2, stem, aluminium 6061, 110 mm, 83°, POB, bolts steel	Z2POB110	8052783481073	Z2POB110X	8052783481080
ZERO2, stem, aluminium 6061, 120 mm, 83°, POB, bolts steel	Z2POB120	8052783481097	Z2POB120X	8052783481103
ZERO2, stem, aluminium 6061, 130 mm, 83°, POB, bolts steel	Z2POB130	8052783481110	Z2POB130X	8052783481127

ZERO2

Road Gravel

Compatibile col kit montaggio luci al reggisella, *Staffa*. Vedi pagina 216.
Compatible with *Staffa* seatpost lights mount kit. See page 216.

DBA (For Shimano Di2)

Ø 27,2 mm | Ø 31,6 mm

IT • Il reggisella Zero2 è un componente perfetto per qualsiasi livello di bicicletta da stradao gravel. Rigido e leggero, il reggisella è realizzato in alluminio 2014 utilizzando un processo di forgiatura 3D. Il reggisella ha un arretramento di 21 mm in due diversi diametri 27.2 mm e 31.6 mm. Il reggisella presenta un sistema di chiusura a doppia-vite per una facile regolazione. Disponibile nella finitura POB (Polish on black).

EN • The Zero2 seatpost is a perfect component for any road bicycle level or gravel. Stiff and light, the seatpost is made in 2014 aluminium using 3D forging process. The seatpost comes with 21 mm setback and two different diameters 27.2 mm and 31.6 mm. The seatpost features a twin-bolt clamp for easy adjustment. Available in POB (Polish on black) finish.

Materiale:
Alluminio 2014 forgiato 3D
Lunghezza:
350 mm
Diametro:
Ø 27,2 • 31,6 mm
Arretramento:
21 mm
Peso:
285 g (Ø 31,6 mm)
Finitura:
POB (Polish on black)
Note:
Compatibile con adattatori Deda per batteria interna DI2

Material:
Alloy 2014 3D forged
Length:
350 mm
Diameter:
Ø 27,2 • 31,6 mm
Setback:
21 mm
Weight:
285 g (Ø 31,6 mm)
Finish:
POB (Polish on black)
Notes:
Compatible with Deda adapter for DI2 internal battery

↓ Description	↓ Part Code	↓ EAN13 Code	↓ OEM Part Code	↓ EAN13 OEM Code
ZERO2, seatpost, aluminium 2014, Ø 27.2×350 mm, setback 21 mm, POB, bolts steel	Z2POB27	8052783481134	Z2POB27X	8052783481141
ZERO2, seatpost, aluminium 2014, Ø 31.6×350 mm, setback 21 mm, POB, bolts steel	Z2POB31	8052783481158	Z2POB31X	8052783481165

ZERO1
Deda
ZERO1

ZERO1

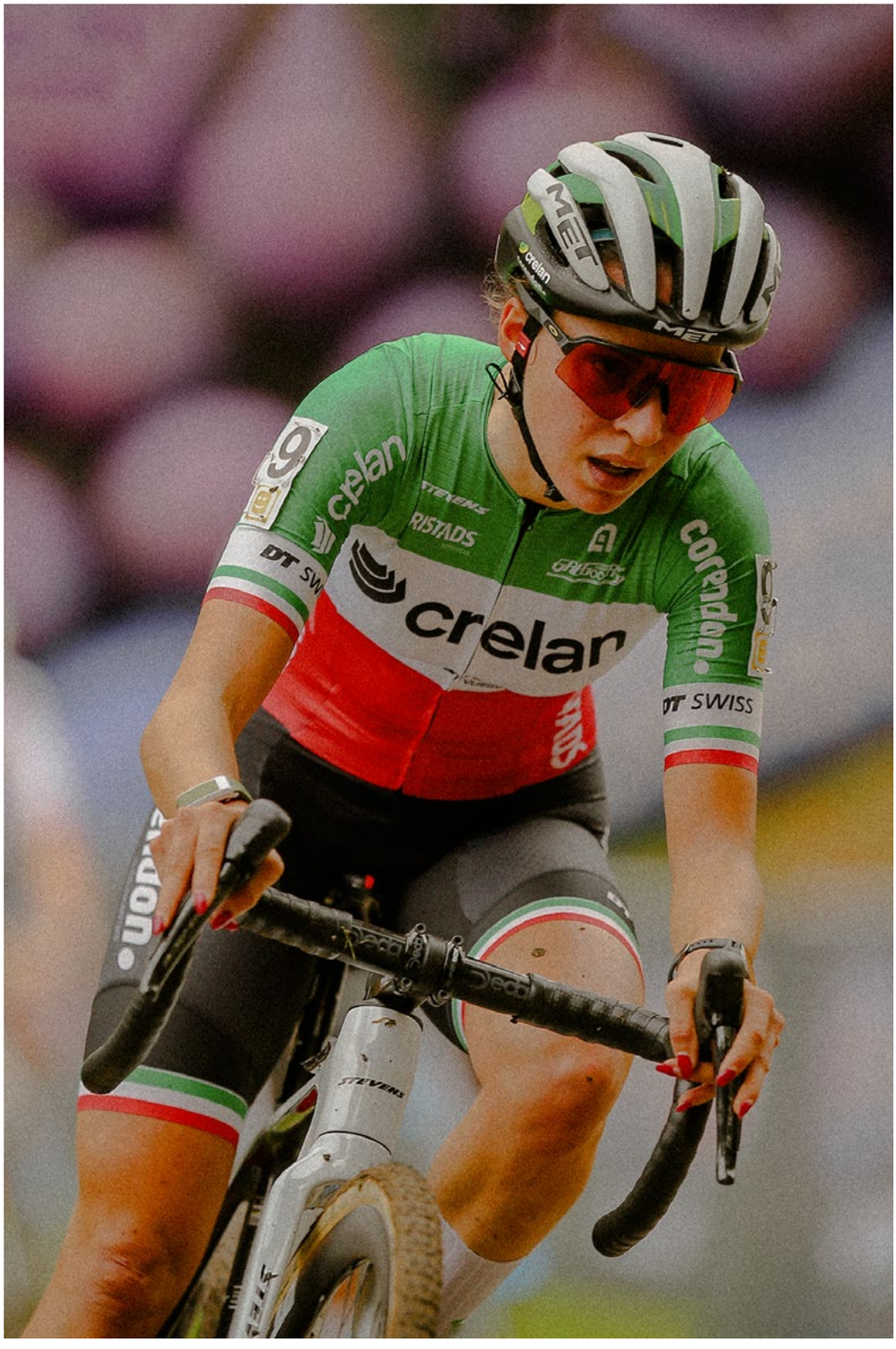
MET
crelan
STEVENS
RISTADS
crelan
DT SWISS
crelan
DT SWISS
crelan
STEVENS

ZERO1

Road Gravel

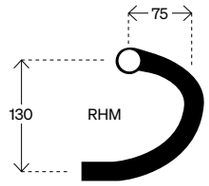

IT • Il manubrio Zero1 è il manubrio classico per definizione, una moderna geometria RHM abbinata a una sezione superiore tonda. Il manubrio è realizzato in lega leggera 6061, trafilato a freddo a doppio spessore. Il manubrio è disponibile nelle misure da 38 a 46 cm, misurato da esterno a esterno come tutti i manubri Deda. La combinazione perfetta con l'attacco Zero1. Disponibile in finitura BOB (black on black).

EN •The Zero1 handlebar is the classic handlebar by definition, a modern RHM geometry combined with round top section. The handlebar is manufactured in light alloy 6061, double butted cold drawn. The handlebar comes in sizes from 38 to 46cm, measured from outside-to-outside as all Deda handlebars. The perfect combination with Zero1 stem. Available in BOB (black on black) finish.

Forma curva:
RHM Rapid Hand Movement
Materiale:
Alluminio 6061 a doppio spessore
Ø Manubrio:
31,7 mm
Profondità:
75 mm
Altezza:
130 mm
Misure:
38 • 40 • 42 • 44 • 46 cm
(esterno - esterno)
Peso:
304 g (42 cm)
Finitura:
Black on Black (BOB)

Shape:
RHM Rapid Hand Movement
Material:
Double butted Alloy 6061
Ø Handlebar:
31,7 mm
Reach:
75 mm
Drop:
130 mm
Sizes:
38 • 40 • 42 • 44 • 46 cm
(outside - outside)
Weight:
304 g (42 cm)
Finish:
Black on Black (BOB)

↓ Description	↓ Part Code	↓ EAN13 Code	↓ OEM Part Code	↓ EAN13 OEM Code
ZERO1, handlebar, aluminium 6061, Ø 31.7, 38 cm, RHM, BOB	DZ1BOB38	8059265683635	DZ1BOB38X	8059265685677
ZERO1, handlebar, aluminium 6061, Ø 31.7, 40 cm, RHM, BOB	DZ1BOB40	8059265683642	DZ1BOB40X	8059265685639
ZERO1, handlebar, aluminium 6061, Ø 31.7, 42 cm, RHM, BOB	DZ1BOB42	8059265683659	DZ1BOB42X	8059265682683
ZERO1, handlebar, aluminium 6061, Ø 31.7, 44 cm, RHM, BOB	DZ1BOB44	8059265683666	DZ1BOB44X	8059265685646
ZERO1, handlebar, aluminium 6061, Ø 31.7, 46 cm, RHM, BOB	DZ1BOB46	8059265683673	DZ1BOB46X	8059265685653

ZERO1

Road Gravel

Finitura BOB
BOB Finish

Compatibile con S-DCR Cover Kit. Vedi pagina 13.
Compatible with S-DCR Cover kit. See page 13.

IT • L'attacco Zero1 è un prodotto unico, funzionale e rigido. Leggero e ideale per le bici da corsa, l'attacco Zero1 è realizzato in alluminio 6061 che garantisce rigidità e leggerezza. La parte superiore piatta dell'attacco si abbina perfettamente al design delle moderne bici da corsa. Progettato per i corridori più esigenti con un rapporto qualità prezzo imbattibile. Disponibile dalla misura 70 mm a 130 mm e in finitura BOB (black on black).

EN • The Zero1 stem is the perfect combination of stiffness, lightness and aero shape. The Zero1 stem is made of 6061 aluminum series and is manufactured using an innovative 3D forging process. The flat top section of the stem perfectly matches the modern road bikes design. Designed for the most exigent riders at an unbeatable quality to price ratio. Available from size 70 mm to 130 mm and BOB (black on black) finish.

Materiale:
Alluminio 6061, forgiato 3D
Viteria:
Acciaio, Nera
Angolo:
82°
Ø Manubrio:
31,7 mm
Cannotto Forcella:
1 1/8" (28,6mm)
Altezza attacco:
36 mm
Misure:
70 • 80 • 90 • 100 • 110 • 120 • 130 mm
Peso:
145 g (110 mm)
Finitura:
BOB (Black on Black)

Material:
3D forged, alloy 6061
Screws:
Steel, Black
Angle:
82°
Ø Handlebar:
31,7 mm
Fork Steerer:
1 1/8" (28,6mm)
Clamp Height:
36 mm
Sizes:
70 • 80 • 90 • 100 • 110 • 120 • 130 mm
Weight:
145 g (110 mm)
Finish:
BOB (Black on Black)

↓ Description	↓ Part Code	↓ EAN13 Code	↓ OEM Part Code	↓ EAN13 OEM Code
ZERO1, stem, aluminium 6061, 70 mm, 82°, BOB, bolts steel	DZ1BOB070	8059265683444	DZ1BOB070X	8059265685233
ZERO1, stem, aluminium 6061, 80 mm, 82°, BOB, bolts steel	DZ1B0B080	8059265683451	DZ1BOB080X	8059265685042
ZERO1, stem, aluminium 6061, 90 mm, 82°, BOB, bolts steel	DZ1BOB090	8059265683468	DZ1BOB090X	8059265685059
ZERO1, stem, aluminium 6061, 100 mm, 82°, BOB, bolts steel	DZ1BOB100	8059265683475	DZ1BOB100X	8059265685066
ZERO1, stem, aluminium 6061, 110 mm, 82°, BOB, bolts steel	DZ1BOB110	8059265683482	DZ1BOB110X	8059265685073
ZERO1, stem, aluminium 6061, 120 mm, 82°, BOB, bolts steel	DZ1BOB120	8059265683499	DZ1BOB120X	8059265685080
ZERO1, stem, aluminium 6061, 130 mm, 82°, BOB, bolts steel	DZ1BOB130	8059265683505	DZ1BOB130X	8059265685097

ZERO1

Road Gravel

Finitura BOB
BOB Finish

Compatibile col kit montaggio luci al reggisella, *Staffa*. Vedi pagina 216.
Compatible with *Staffa* seatpost lights mount kit. See page 216.

DBA (For Shimano Di2)

Ø 27,2 mm | Ø 31,6 mm

IT • Lo Zero1 è un eccellente reggisella con regolazione a doppia vite, lo stesso sistema presente sul modello Zero2. Il reggisella Zero1 insieme a attacco e manubrio è un ottimo kit di finitura per qualsiasi bicicletta da strada. Il reggisella è realizzato in alluminio 6061 e garantisce leggerezza e resistenza ad un prezzo molto competitivo. Disponibile in due diametri 27.2 mm e 31.6 mm e finitura BOB (Black on Black).

EN • The Zero1 is an excellent seatpost with twin-bolt screw adjustment, the same system of Zero2 model. The Zero1 seatpost along with stem and handlebar is a great finishing kit for any road bike. The seatpost is made of 6061 aluminium and guarantees lightness and strength at a very competitive price. Available in two diameters 27.2 mm and 31.6 mm and BOB (Black on Black) finish.

Materiale:
Alluminio 2014 forgiato 3D
Lunghezza:
350 mm
Diametro:
Ø 27,2 • 31,6 mm
Arretramento:
20 mm
Peso:
295 g (Ø 31,6 mm)
Finitura:
BOB (Black on Black)
Note:
Compatibile con adattatori Deda per batteria interna DI2.

Material:
Alloy 2014 3D forged
Length:
350 mm
Diameter:
Ø 27,2 • 31,6 mm
Setback:
20 mm
Weight:
295 g (Ø 31,6 mm)
Finish:
BOB (Black on Black)
Notes:
Compatible with Deda adapter for DI2 internal battery.

↓ Description	↓ Part Code	↓ EAN13 Code	↓ OEM Part Code	↓ EAN13 OEM Code
ZERO1, seatpost, aluminium 6061, Ø 27.2×350 mm, setback 20 mm, BOB, bolts steel	DZ1BOB272	8059265683703	DZ1BOB272X	8059265685172
ZERO1, seatpost, aluminium 6061, Ø 31.6×350 mm, setback 20 mm, BOB, bolts steel	DZ1BOB316	8059265683710	DZ1BOB316X	8059265685189

ANGONIS
ANGONIS

ZERO

OEM Only

Road Gravel

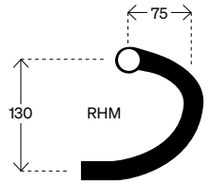

IT • Prodotto disponibile solo per costruttori OEM. Il manubrio Zero presenta la geometria RHM abbinata a una sezione superiore tonda. Realizzato in alluminio 6061 a doppio spessore. Anodizzato nero con finitura BOB (black on black). Disponibile nelle misure 42, 44 e 46 (esterno-esterno).

EN • Product available to OEM manufacturers only. The Zero handlebar features the RHM geometry combined with round top section. The handlebar is manufactured in light alloy 6061 double butted. Available in BOB (black on black) finish. The handlebar comes in sizes 42, 44 and 46cm, measured from outside-to-outside.

Forma curva:
RHM Rapid Hand Movement
Materiale:
Alluminio 6061
Ø Manubrio:
31,7 mm
Profondità:
75 mm
Altezza:
130 mm
Misure:
42 • 44 • 46 cm (esterno - esterno)
Peso:
312 g (42 cm)
Finitura:
BOB (Black on Black)

Shape:
RHM Rapid Hand Movement
Material:
6061 aluminum series
Ø Handlebar:
31,7 mm
Reach:
75 mm
Drop:
130 mm
Sizes:
42 • 44 • 46 cm (outside to outside)
Weight:
312 g (42 cm)
Finish:
BOB (black on black)

↓ Description	↓ Deda OEM Part Code	↓ EAN13 OEM Code
ZERO, handlebar, aluminium 6061, Ø 31.7, 42 cm, RHM, BOB	DZERO42	8059265683789
ZERO, handlebar, aluminium 6061, Ø 31.7, 44 cm, RHM, BOB	DZERO44	8059265683796
ZERO, handlebar, aluminium 6061, Ø 31.7, 46 cm, RHM, BOB	DZERO46	8059265683802

ZERO

OEM Only

Road Gravel

Finitura BOB
BOB Finish

Compatibile con S-DCR Cover Kit. Vedi pagina 13.
Compatible with S-DCR Cover kit. See page 13.

IT • Prodotto disponibile solo per costruttori OEM. L'attacco Zero è forgiato 3D in lega di alluminio 6061. Attacco con un frontalino a 4 viti, anodizzato nero con finitura BOB (black on black). Disponibile dalla misura 70 alla 120 mm.

EN • Product available to OEM manufacturers only. Zero stem is 3D forged in 6061 aluminum series. The stem features a 4-bolt faceplate, black anodized with BOB (black on black) finish. Available from 70 to 120 mm size.

Materiale:
Alluminio 6061, forgiato 3D
Viteria:
Acciaio, nera
Angolo:
83°
Ø Manubrio:
31,7 mm
Cannotto Forcella:
1 1/8" (28,6mm)
Altezza attacco:
40 mm
Misure:
70 • 80 • 90 • 100 • 110 • 120 mm
Peso:
145 g (110 mm)
Finitura:
BOB (Black on Black)

Material:
3D forged, alloy 6061
Screws:
Steel, black
Angle:
83°
Ø Handlebar:
31,7 mm
Fork Steerer:
1 1/8" (28,6mm)
Clamp Height:
40 mm
Sizes:
70 • 80 • 90 • 100 • 110 • 120 mm
Weight:
145 g (110 mm)
Finish:
BOB (Black on Black)

↓ Description	↓ Deda OEM Part Code	↓ EAN13 OEM Code
ZERO, stem, aluminium 6061, 70 mm, 83°, BOB, bolts steel	DZERO070	8059265683727
ZERO, stem, aluminium 6061, 80 mm, 83°, BOB, bolts steel	DZERO080	8059265683734
ZERO, stem, aluminium 6061, 90 mm, 83°, BOB, bolts steel	DZERO090	8059265683741
ZERO, stem, aluminium 6061, 100 mm, 83°, BOB, bolts steel	DZERO100	8059265683758
ZERO, stem, aluminium 6061, 110 mm, 83°, BOB, bolts steel	DZERO110	8059265683765
ZERO, stem, aluminium 6061, 120 mm, 83°, BOB, bolts steel	DZERO120	8059265683772

ZERO 17°

OEM Only

Road Gravel

IT • Versione dell'attacco Zero con angolo +17° per una posizione più rialzata e confortevole. Disponibile con finitura BOB (black on black) dalla misura 70 a 120 mm.

EN • Zero stem option with 17° positive angle for more riser and comfortable position. Black anodized with BOB (black on black) finish and available from 70 to 120 mm size.

Materiale:
Alluminio 6061
Viteria:
Acciaio, nera
Angolo:
+17°
Ø Manubrio:
31,7 mm
Cannotto Forcella:
1 1/8" (28,6mm)
Altezza attacco:
40 mm
Misure:
70 • 80 • 90 • 100 • 110 mm
Peso:
145 g (110 mm)
Finitura:
BOB (Black on Black)
Note:
Disponibile solo per costruttori OEM

Material:
Alloy 6061
Screws:
Steel, black
Angle:
+17°
Ø Handlebar:
31,7 mm
Fork Steerer:
1 1/8" (28,6mm)
Clamp Height:
40 mm
Sizes:
70 • 80 • 90 • 100 • 110 mm
Weight:
145 g (110 mm)
Finish:
BOB (Black on Black)
Notes:
Available for OEm manufacturers only

↓ Description	↓ Deda OEM Part Code	↓ EAN13 OEM Code
ZERO 17°, stem, aluminium 6061, 70 mm, + 17°, BOB, bolts steel	DZERO17-070	8052783487976
ZERO 17°, stem, aluminium 6061, 80 mm, + 17°, BOB, bolts steel	DZERO17-080	8052783487983
ZERO 17°, stem, aluminium 6061, 90 mm, + 17°, BOB, bolts steel	DZERO17-090	8052783487990
ZERO 17°, stem, aluminium 6061, 100 mm, + 17°, BOB, bolts steel	DZERO17-100	8052783488003
ZERO 17°, stem, aluminium 6061, 110 mm, + 17°, BOB, bolts steel	DZERO17-110	8052783488010

ZERO

OEM Only

Road Gravel

DBA (For Shimano Di2)

Ø 27,2 mm | Ø 31,6 mm

IT • Prodotto disponibile solo per costruttori OEM.
Lo Zero è un reggisella entry-level realizzato in alluminio 6061 con un arretramento di 18 mm. Disponibile in due diametri 27.2 mm e 31.6 mm e finitura BOB (Black on Black).

EN • Product available to OEM manufacturers only.
The Zero is an entry-level seatpost made of 6061 aluminium with an 18 mm setback. Available in two diameters 27.2 mm and 31.6 mm and BOB (Black on Black) finish.

Materiale:
Alluminio 6061
Lunghezza:
350 mm
Diametro:
Ø 27,2 • 31,6 mm
Arretramento:
18 mm
Peso:
277 g (Ø 31,6 mm)
Finitura:
BOB (Black on Black)

Material:
Alloy 6061 T6
Length:
350 mm
Diameter:
Ø 27,2 • 31,6 mm
Setback:
18 mm
Weight:
277 g (Ø 31,6 mm)
Finish:
BOB (Black on Black)

↓ Description	↓ Deda OEM Part Code	↓ EAN13 OEM Code
ZERO, seatpost, aluminium 6061, Ø 27.2×350 mm, setback 18 mm, BOB, bolts steel	DZERO272	8059265683826
ZERO, seatpost, aluminium 6061, Ø 31.6×350 mm, setback 18 mm, BOB, bolts steel	DZERO316	8059265683833

GRAVEL

Superzero Gravel Carbon → Manubrio/Handlebar 136

Superzero Gravel Alloy → Manubrio/Handlebar 138

Gravel 100 → Manubrio/Handlebar 140

Gravel 100 OEM → Manubrio/Handlebar 141

Manubri Gera/Gera Handlebars 142

Gera Carbon → Manubrio/Handlebar 144

Gera Alloy → Manubrio/Handlebar 145

Gera Carbon → Ruote/Wheels 146

Gera Alloy → Ruote/Wheels 148

Forcelle/Forks 150

Gera Curvy → Forcella/Fork 152

Gera EDG → Forcella/Fork 154

Allroad → Forcella/Fork 156

EDG Road → Forcella/Fork 158

Tecnologie forcelle/Forks tecnology 161

Accessori forcelle/Forks accessories 162

SUPERZERO Gravel Carbon

Gravel Road

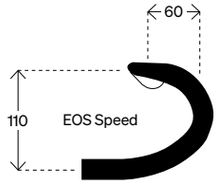

IT • Superzero Gravel è un manubrio gravel del segmento racing per ciclisti che non cercano compromessi e sono esigenti anche quando si trovano sullo sterrato. Il primo motivo per passare da un manubrio da strada tradizionale a uno più specifico gravel è il controllo e la stabilità. Superzero Gravel è tutto in uno. È un manubrio più largo con le estremità che si allargano verso l'esterno, offre un maggiore controllo rispetto a una versione standard da corsa, ma è progettato per la velocità. L'angolo di apertura di 16° della curva offre stabilità anche quando si guida su terreni impegnativi. Reach and drop sono stati ottimizzati nella forma EOS-SPEED (Endurance Optimized Shape) per un'esperienza di guida unica. La profondità di 60mm permette una posizione più ravvicinata delle leve freno mentre l'altezza di 110 mm consente una posizione più confortevole e una veloce transizione dalle leve alla presa bassa. Il sistema DCR (Deda internal cable routing) permette la piena integrazione dei cavi all'interno del manubrio con qualsiasi telaio compatibile, ma puoi anche scegliere un passaggio cavi semi-interno. Il manubrio è disponibile in 3 diverse misure, 42, 44 e 46.

EN • Superzero Gravel is a handlebar in the racing gravel segment for cyclists who do not seek compromises and are demanding even when they are on off-road. The first reason to upgrade from a traditional road handlebar to a more specific gravel model is control and stability. Superzero Gravel is all in one. It is a wider handlebar with drops that flare outward, provides more control when compared to a standard road version, but engineered for speed. The 16° flare angle at the drops offers stability when you ride a challenging terrain. Reach and drop have been optimized in the EOS-SPEED shape (Endurance Optimized Shape) for a unique riding experience. The 60mm reach allows a closer position of brake levers while the 110mm compact drop is for more comfort and fast transition from lever to bar-end. The DCR system (Deda internal cable routing) allows the full integration of the cables inside the handlebar with any compatible frame, but you can also choose a semi-internal cable routing. Handlebar is available in 3 different sizes, 42, 44 and 46.

Forma:
EOS-SPEED
(Endurance Optimized Shape)
Materiale:
Fibra di carbonio unidirezionale
Ø manubrio:
31,7 mm
Profondità:
60 mm
Altezza:
110 mm
Angolo Apertura:
16°
Angolo Esterno:
0°
Larghezza:
42 • 44 • 46 cm (esterno-esterno)
Larghezza totale:
48 • 50 • 52 cm
Peso:
235 g (42 cm)
Finitura:
POB (Polish on black)
Note:
Compatibile DCR; area centrale di 83mm per il montaggio degli accessori e delle prolunghe Deda (Jet, Fast Pro, Parabolica).

Shape:
EOS-SPEED
(Endurance Optimized Shape)
Material:
UD carbon fiber
Ø handlebar:
31,7 mm
Reach:
60 mm
Drop:
110 mm
Flare:
16°
Outsweep:
0°
Width:
42 • 44 • 46 cm (outside-outside)
Full width:
48 • 50 • 52 cm
Weight:
235 g (42 cm)
Finish:
POB (Polish on black)
Note:
DCR compatible; 83mm clamp area for mounting accessories and Deda clip-on bar (Jet, Fast Pro, Parabolica).

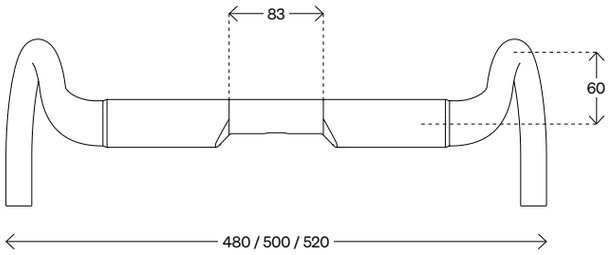

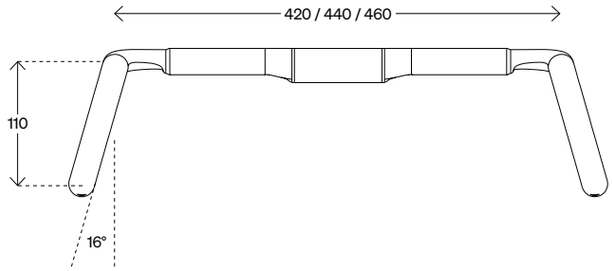

↓ Description	↓ Part Code	↓ EAN13 Code	↓ OEM Part Code	↓ EAN13 OEM Code
SUPERZERO GRAVEL CARBON, handlebar, carbon, Ø 31.7, 42 cm, EOS, POB, 16° flare	SZGRHBPOB42	8055774360456	SZGRHBPOB42X	8055774360463
SUPERZERO GRAVEL CARBON, handlebar, carbon, Ø 31.7, 44 cm, EOS, POB, 16° flare	SZGRHBPOB44	8055774360470	SZGRHBPOB44X	8055774360487
SUPERZERO GRAVEL CARBON, handlebar, carbon, Ø 31.7, 46 cm, EOS, POB, 16° flare	SZGRHBPOB46	8055774360494	SZGRHBPOB46X	8055774360500

SUPERZERO Gravel Alloy

Gravel Road

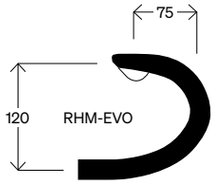

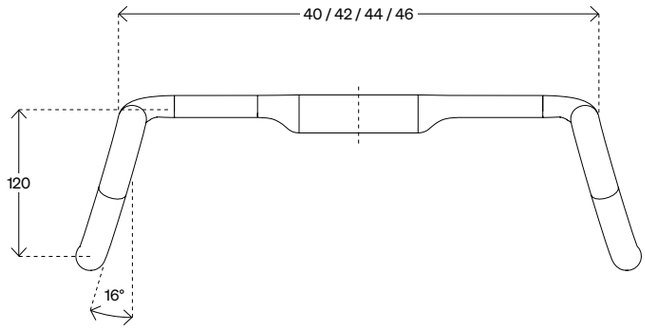

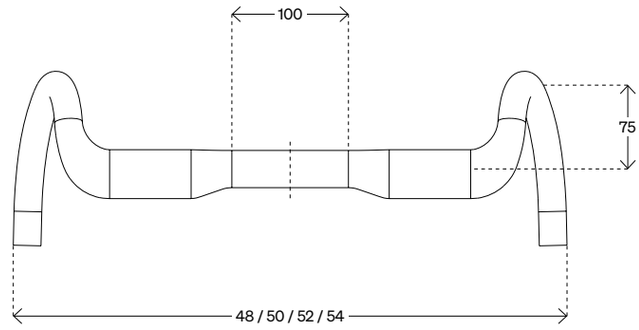

IT • Superzero Gravel Alloy è il manubrio gravel in alluminio per il segmento racing. Il primo motivo per passare da un manubrio da strada tradizionale a uno più specifico gravel è il controllo e la stabilità. Superzero Gravel è tutto in uno. È un manubrio più largo con le estremità che si allargano verso l'esterno, offre un maggiore controllo rispetto a una versione standard da corsa, ma è progettato per la velocità. L'angolo di apertura di 16° della curva offre stabilità anche quando si guida su terreni impegnativi. Reach and drop sono stati ottimizzati nella forma RHM-EVO. Stessa profondità di 75 mm di un manubrio road con l'altezza di 120 mm che consente una posizione più confortevole e una veloce transizione dalle leve alla presa bassa. Il sistema DCR (Deda internal cable routing) permette la piena integrazione dei cavi all'interno del manubrio con qualsiasi telaio compatibile, ma puoi anche scegliere un passaggio cavi esterno. Il manubrio è disponibile in 4 diverse misure, 40, 42, 44 e 46.

EN • Superzero Gravel Alloy is the aluminum handlebar for the racing gravel segment. The first reason to upgrade from a traditional road handlebar to a more specific gravel model is control and stability. Superzero Gravel is all in one. It is a wider handlebar with drops that flare outward, provides more control when compared to a standard road version, but engineered for speed. The 16° flare angle at the drops offers stability when you ride a challenging terrain. Reach and drop have been optimized in the RHM-EVO shape. The handlebar features a 75 mm reach, same as the road version, with a 120 mm compact drop for more comfort and fast transition from lever to bar-end. The DCR system (Deda internal cable routing) allows the full integration of the cables inside the handlebar with any compatible frame, but you can also choose an external cable routing. Handlebar is available in 4 different sizes, 40, 42, 44 and 46.

Forma curva:
RHM-EVO
Materiale:
Alluminio 6061
Ø Manubrio:
31,7 mm
Profondità:
75 mm
Altezza:
120 mm
Angolo Apertura:
16°
Angolo Esterno:
0°
Larghezza:
40 • 42 • 44 • 46 cm (esterno-esterno)
Larghezza totale:
48 • 50 • 52 • 54 cm
Peso:
320 g (42 cm)
Finitura:
POB (Polish on black)
Note: Compatibile DCR; area centrale di 100 mm per il montaggio di accessori e prolunghe Deda (Jet, Fast Pro, Parabolica).

Shape:
RHM-EVO
Material:
Alloy 6061
Ø Handlebar:
31,7 mm
Reach:
75 mm
Drop:
120 mm
Flare:
16°
Outsweep:
0°
Width:
40 • 42 • 44 • 46 cm (outside - outside)
Full width:
48 • 50 • 52 • 54 cm
Weight:
320 g (42 cm)
Finish:
POB (Polish on black)
Notes: DCR compatible; 100 mm clamp area for mounting accessories and Deda clip-on bars (Jet, Fast Pro, Parabolica).

↓ Description	↓ Part Code	↓ EAN13 Code	↓ OEM Part Code	↓ EAN13 OEM Code
SUPERZERO GRAVEL, handlebar, aluminium 6061, Ø 31.7, 40 cm, RHM-EVO, 16° flare	SZGRHBAL40	8055774363990	SZGRHBAL40X	8055774364003
SUPERZERO GRAVEL, handlebar, aluminium 6061, Ø 31.7, 42 cm, RHM-EVO, 16° flare	SZGRHBAL42	8055774364010	SZGRHBAL42X	8055774364027
SUPERZERO GRAVEL, handlebar, aluminium 6061, Ø 31.7, 44 cm, RHM-EVO, 16° flare	SZGRHBAL44	8055774364034	SZGRHBAL44X	8055774364041
SUPERZERO GRAVEL, handlebar, aluminium 6061, Ø 31.7, 46 cm, RHM-EVO, 16° flare	SZGRHBAL46	8055774364058	SZGRHBAL46X	8055774364065

GRAVEL 100

Gravel Road

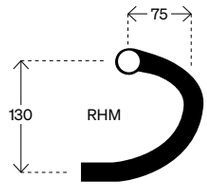

Vedi sezione "Deda bike fit" (Pag. 14) per le specifiche tecniche.
See section "Deda bike fit" (Pag. 14) for technical specifications.

IT • Gravel 100 è un manubrio gravel di altissima gamma in lega 7075 estremamente leggero (260 g). È basato sulla forma RHM della serie Zero 100 per mantenere la tipica impugnatura corsa a cui è stato aggiunto un angolo di apertura di 12 gradi che garantisce una maggiore stabilità. Alle leve la larghezza è la stessa del manubrio standard da strada, da 40 a 46 mm esterno-esterno, ma i 12 gradi di apertura estendono la larghezza dell'impugnatura bassa di ulteriori 60 mm per ogni taglia. La sezione superiore leggermente aero è progettata per essere ergonomica e consentire una posizione confortevole delle mani. Il manubrio presenta un'area centrale da 31.7 mm che si estende per una buona distanza su entrambi i lati dell'attacco per montare tutta una serie di accessori come GPS, luci e prolunghe aero. Questo rende il manubrio Gravel 100 la scelta migliore per iniziare le tue avventure in gravel.

EN • Gravel 100 is a high-end gravel handlebar made in 7075 aluminum and extremely light (260 g). Based on the RHM shape of the Zero 100 series to maintain the typical road drop design to which a 12 degrees flare angle has been added to guarantee greater stability. At the hoods the widths are the standard road size options, 40 cm to 46 cm outside to outside, but the 12-degree flare each side kicks the bottom width by an extra 60mm for each size. The slightly aero top section is design to be ergonomic and to allow comfortable hand positions. The handlebar features a 31.7 mm clamping area that extends a good distance either side of the stem to mount a lot of accessories such as GPS, lights and aero extensions. This makes Gravel 100 handlebar the best choice to start your gravel adventures.

Forma curva:
RHM Rapid Hand Movement
Materiale:
Alluminio 7050 a triplo spessore
Ø Manubrio:
31,7 mm
Profondità:
75 mm
Altezza:
130 mm
Flare A°:
12°
Angolo esterno:
2°
Larghezza:
40 • 42 • 44 • 46 cm
(larghezza misurata esterno-esterno in posizione delle leve)
Larghezza totale:
46 • 48 • 50 • 52 cm
Peso:
260 g (42 cm)
Finitura
BOB (Black on Black)
Note:
Ampia area centrale per il montaggio degli accessori e delle prolunghe Deda (Jet, Fast Pro, Parabolica).

Shape:
RHM Rapid Hand Movement
Material:
Triple butted Alloy 7050
Ø Handlebar:
31,7 mm
Reach:
75 mm
Drop:
130 mm
Flare A°:
12°
Outsweep:
2°
Width:
40 • 42 • 44 • 46 cm
(width measured outside-to-outside at the lever position)
Full width:
46 • 48 • 50 • 52 cm
Weight:
260 g (42 cm)
Finish:
BOB (Black on Black)
Notes:
Wide center area for mounting accessories and Deda clip-on bar (Jet, Fast Pro, Parabolica).

↓ Description	↓ Deda Part Code	↓ EAN13 Code
GRAVEL100, handlebar, aluminium 7075, Ø 31.7, 40 cm, RHM, BOB, 12° flare	G10040	8052783480595
GRAVEL100, handlebar, aluminium 7075, Ø 31.7, 42 cm, RHM, BOB, 12° flare	G10042	8052783480618
GRAVEL100, handlebar, aluminium 7075, Ø 31.7, 44 cm, RHM, BOB, 12° flare	G10044	8052783480632
GRAVEL100, handlebar, aluminium 7075, Ø 31.7, 46 cm, RHM, BOB, 12° flare	G10046	8052783480656

GRAVEL 100 OEM

OEM Only

Gravel Road

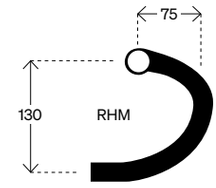

Vedi sezione "Deda bike fit" (Pag. 14) per le specifiche tecniche.
See section "Deda bike fit" (Pag. 14) for technical specifications.

IT • La versione in alluminio 6061 è destinata ai soli produttori OEM. Il manubrio ha la stessa geometria della versione after-market e presenta una finitura opaca.

EN • The 6061 alloy version is available to OEM manufacturers only. The handlebar features the same geometry of the after-market version with a black matt finish.

Forma curva:
RHM Rapid Hand Movement
Materiale:
Alluminio 6061 a doppio spessore
Ø Manubrio:
31,7 mm
Profondità:
75 mm
Altezza:
130 mm
Flare A°:
12°
Angolo esterno:
2°
Larghezza:
40 • 42 • 44 • 46 cm
(larghezza misurata esterno-esterno in posizione delle leve)
Larghezza totale:
46 • 48 • 50 • 52 cm
Peso:
300 g (42 cm)
Finitura
BOB (Black on Black)
Note:
Ampia area centrale per il montaggio degli accessori e delle prolunghe Deda (Jet, Fast Pro, Parabolica).

Shape:
RHM Rapid Hand Movement
Material:
Double butted alloy 6061
Ø Handlebar:
31,7 mm
Reach:
75 mm
Drop:
130 mm
Flare A°:
12°
Outsweep:
2°
Width:
40 • 42 • 44 • 46 cm
(width measured outside-to-outside at the lever position)
Full width:
46 • 48 • 50 • 52 cm
Weight:
300 g (42 cm)
Finish:
BOB (Black on Black)
Notes:
Wide center area for mounting accessories and Deda clip-on bar (Jet, Fast Pro, Parabolica).

↓ Description	↓ OEM Part Code	↓ EAN13 OEM Code
GRAVEL100, OEM, handlebar, aluminium 6061, Ø 31.7, 40 cm, RHM, BOB, 12° flare	G10040OEM	8052783483657
GRAVEL100, OEM, handlebar, aluminium 6061, Ø 31.7, 42 cm, RHM, BOB, 12° flare	G10042OEM	8052783483664
GRAVEL100, OEM, handlebar, aluminium 6061, Ø 31.7, 44 cm, RHM, BOB, 12° flare	G10044OEM	8052783483671
GRAVEL100, OEM, handlebar, aluminium 6061, Ø 31.7, 46 cm, RHM, BOB, 12° flare	G10046OEM	8052783483688

GERA HANDLEBARS

Gera Carbon

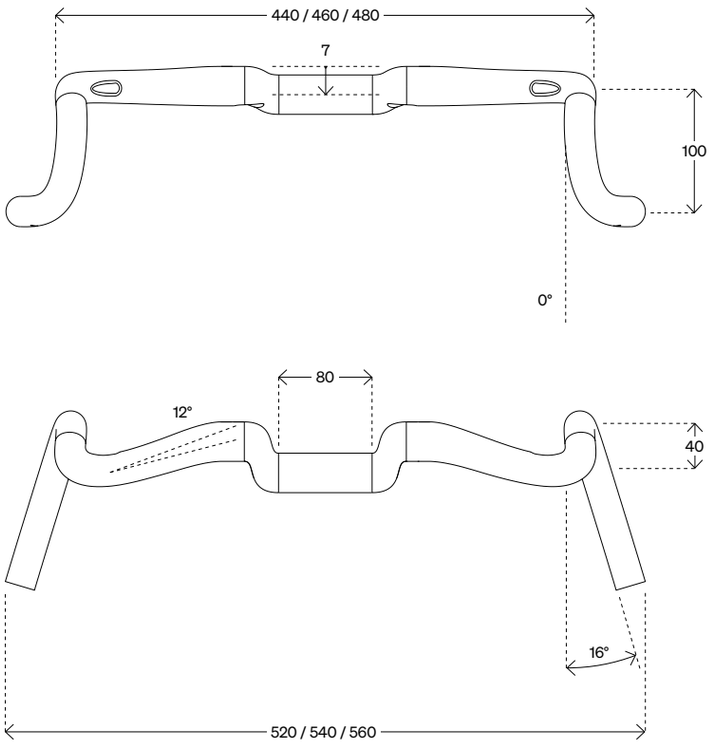

Gera Alloy

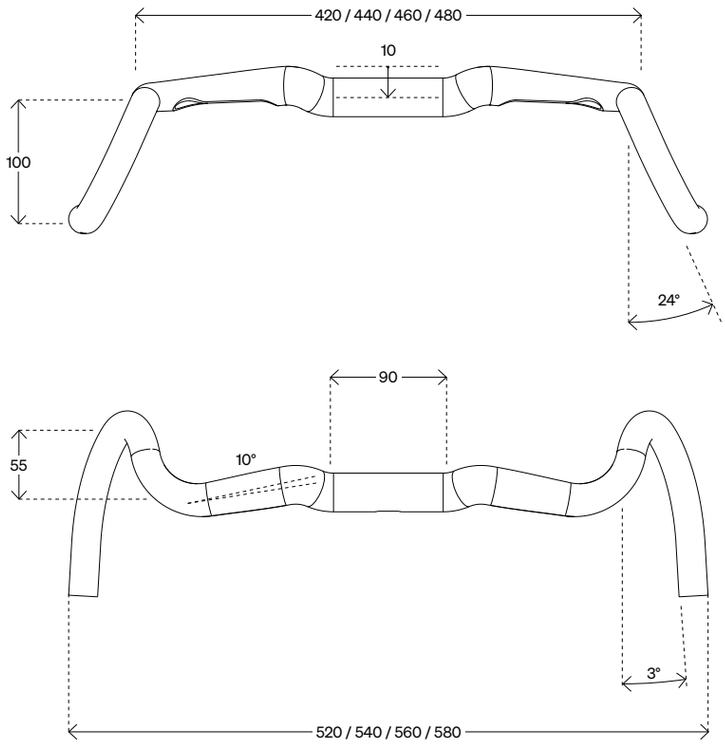

Gèra /'ge:ra/ Ghiaia

IT • Gera identifica una zona della pianura lombarda compresa tra il fiume Adda a ovest, il fiume Serio a est, Bergamo a nord, mentre a sud i confini arrivano fino a Crema. Gera è la linea di prodotti Deda progettata per gravel e adventure bikes, la combinazione di design e funzionalità per chi ricerca un allestimento più confortevole nelle lunghe distanze in bikepacking.
Una gamma completa di manubri e ruote per affrontare condizioni molto varie da normali strade bianche a terreni molto duri e veloci.

Gèra /'ge:ra/ Gravel

EN • Gera identifies an area of the Lombardia plain between the river Adda to the west, the river Serio to the east, Bergamo to the north, while to the south the borders reach as far as Crema. Gera is Deda line of products designed for gravel and adventure bikes, the combination of design and function delivering a more comfortable set-up for long distance bikepacking. A complete range of handlebars and wheels to face a wide range of conditions from regular white roads to hard and fast terrains.

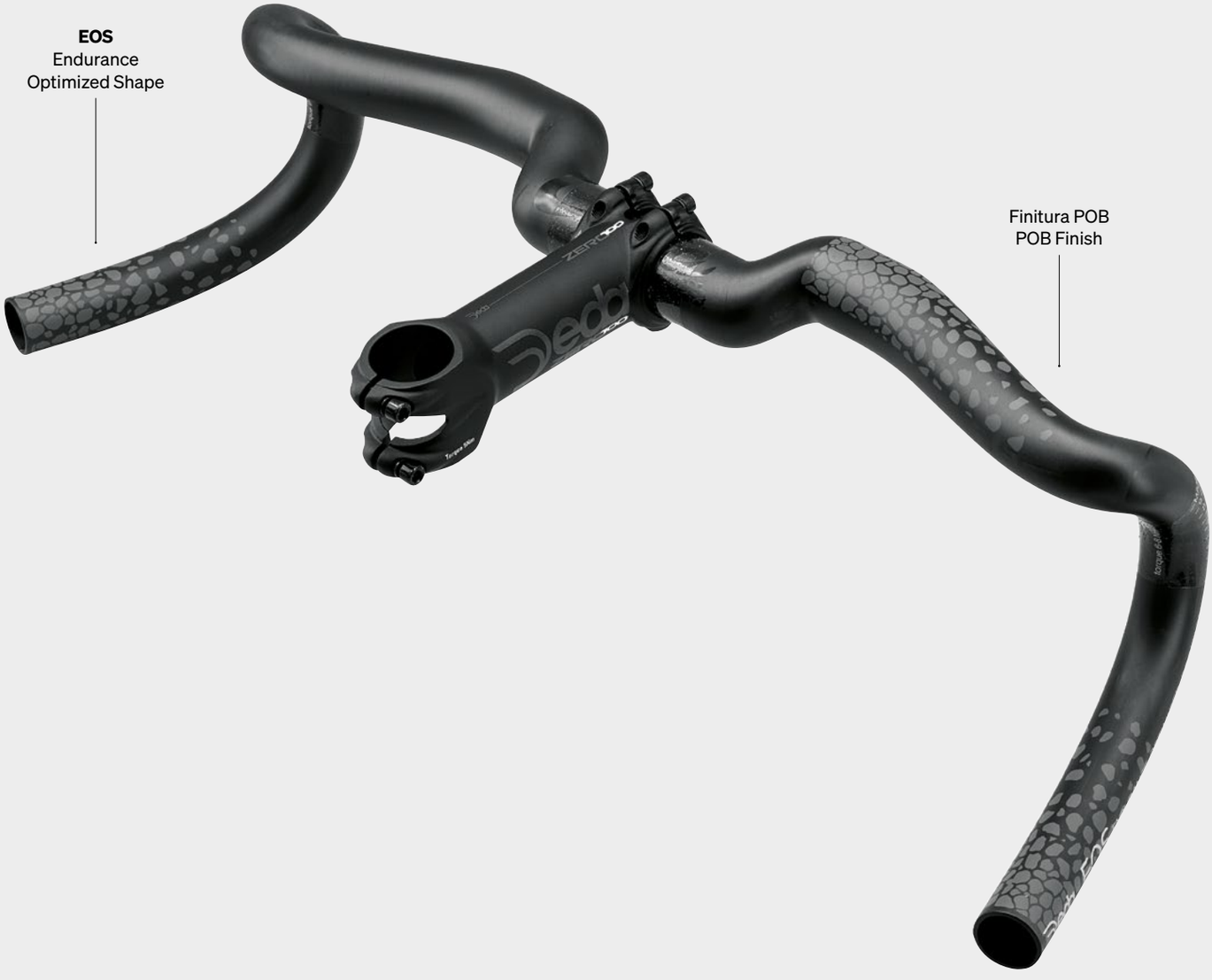

DCR (Deda Internal Cable Routing)
Integrazione completa dei cavi all'interno del manubrio.
System allows the full integration of the cables inside the handlebar.

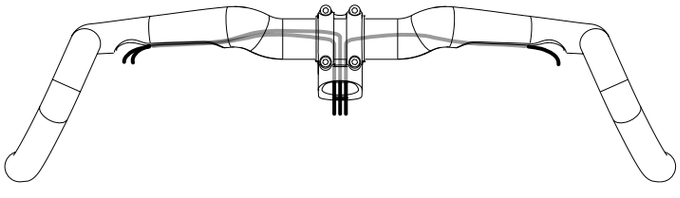

S-DCR (Deda Semi-Internal Cable Routing)
Passaggio cavi semi-interno dei cavi con attacco superbox.
Semi-internal cables routing configuration with Superbox stem.

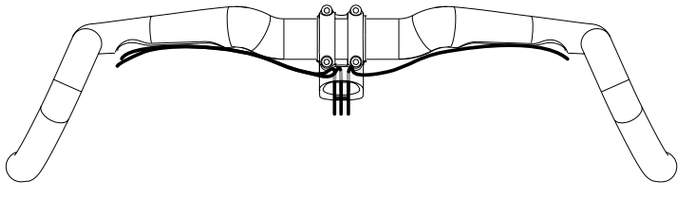

GERA Carbon

Gravel Road

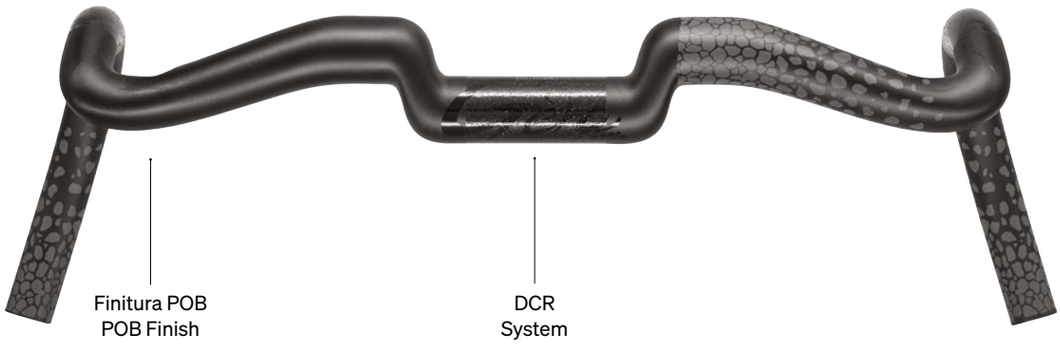

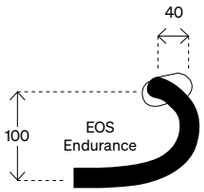

IT • Gera® definisce un nuovo standard per i manubri gravel. È la scelta ideale per qualsiasi gravel e adventure bike. Garantisce multiple opzioni per la posizione delle mani per sentirsi sempre a proprio agio, più aggressiva nei tratti veloci o più confortevole nei lunghi giri su sterrato.
Il manubrio è progettato con un angolo di arretramento di 12° e un rialzo di 7mm. L'angolo esterno della curva di 16° garantisce ancora più stabilità quando sei off-road. Il reach e il drop sono stati ottimizzati nella forma EOS (Endurance Optimized Shape) per un'esperienza di guida unica.
La profondità di 40mm permette una posizione più ravvicinata delle leve freno mentre l'altezza di 100mm consente una posizione più confortevole e una veloce transizione dalle leve alla presa bassa. Con Gera è possibile utilizzare prolunghe in due diverse posizioni sul manubrio, tradizionale nella parte centrale e più larga nella parte rialzata a vantaggio del confort.
Il DCR system (Deda internal cable routing) permette l'integrazione completa dei cavi all'interno del manubrio e della bici nel caso di telai compatibili, prevede anche il montaggio semi-integrato delle guaine.
Manubrio disponibile in 3 misure 44, 46 e 48.

EN • Gera® simply defines a new standard for gravel handlebars.
It is the perfect choice for any gravel & adventure bike set-up.
Multiple hands positions at the rider disposal to always find the best grip, aggressive if you want to run fast or comfortable if you want to enjoy your long ride. The handlebar features a 12° back sweep angle and 7mm rise.
The 16° outsweep at the drops offers more stability when you ride off-road. Reach and drop have been optimized in the EOS shape (Endurance Optimized Shape) for a unique riding experience. The 40mm reach allows a closer position of brake levers while the 100mm compact drop is for more comfort and fast transition from lever to bar-end. With Gera® you can use clip-on bar extensions in two different positions, traditional at the center clamp area or wider and riser to improve your comfort.
The DCR system (Deda internal cable routing) allows the full integration of the cables inside the handlebar with any compatible frame, but you can also choose a semi-internal cable routing. Handlebar is available in 3 different sizes, 44, 46 and 48.

Forma curva:
EOS (Endurance Optimized Shape)
Materiale:
Monoscocca carbonio undirezionale
Ø manubrio:
31,7 mm
Profondità:
40 mm
Altezza:
100 mm
Flare:
0°
Angolo esterno:
16°
Rise:
7 mm
Back sweep:
12 mm / 12°
Misure:
44 (52) • 46 (54) • 48 (56) cm
Larghezza misurata esterno-esterno in posizione delle leve.
Peso:
220 g (44 cm)
Finitura:
POB (Polish on black)
Note:
Compatibile sistema DCR per passaggi cavi interni. Ampia area centrale per il montaggio degli accessori e delle prolunghe Deda (Jet, Fast Pro, Parabolica).

Shape:
EOS (Endurance Optimized Shape)
Material:
Ud carbon construction
Ø Handlebar:
31,7 mm
Reach:
40 mm
Drop:
100 mm
Flare:
0°
Outsweep:
16°
Rise:
7 mm
Back Sweep:
12 mm / 12°
Size:
44 (52) • 46 (54) • 48 (56) cm
Width measured outside-to-outside at the lever position.
Weight:
220 g (44 cm)
Finish:
POB (Polish on black)
Note:
DCR system compatible for internal cable routing.
Wide center area for mounting accessories and Deda clip-on bar (Jet, Fast Pro, Parabolica).

↓ Description	↓ Part Code	↓ EAN13 Code	↓ OEM Part Code	↓ EAN13 OEM Code
GERA CARBON, handlebar, carbon, Ø 31.7, 44 cm, EOS, POB, 7 mm rise, 16° outsweep	GERA44	8052783487730	GERA44X	8052783487723
GERA CARBON, handlebar, carbon, Ø 31.7, 46 cm, EOS, POB, 7 mm rise, 16° outsweep	GERA46	8052783487754	GERA46X	8052783487747
GERA CARBON, handlebar, carbon, Ø 31.7, 48 cm, EOS, POB, 7 mm rise, 16° outsweep	GERA48	8052783487778	GERA48X	8052783487761

GERA Alloy

Gravel Road

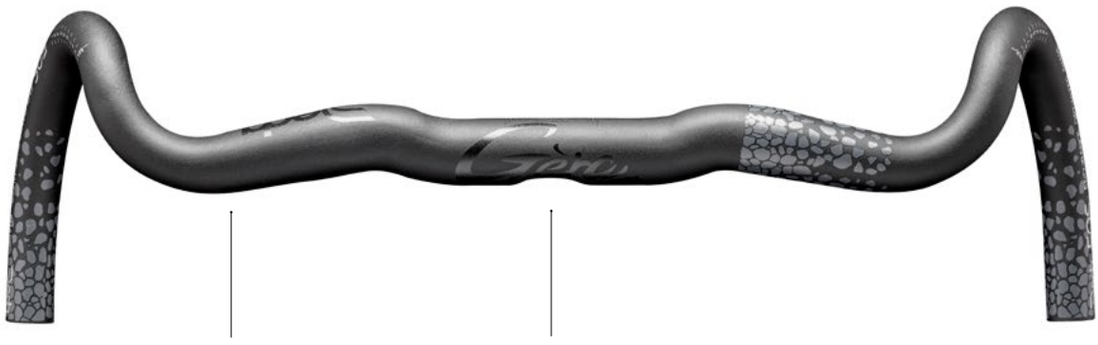

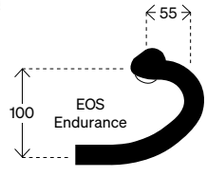

IT • Gera® Alloy è realizzato in alluminio 6061 utilizzando un innovativo processo di formatura meccanica che permette di realizzare un design molto complesso come Gera. È la scelta ideale per qualsiasi gravel e adventure bike. Garantisce multiple opzioni per la posizione delle mani per sentirsi sempre a proprio agio sullo sterrato. Il manubrio ha un arretramento di 10° e un'inclinazione verso il basso di 5° per una configurazione più confortevole durante il bikepacking di lunga distanza. Il rialzo di 10 mm è un ulteriore aiuto per ottenere l'altezza desiderata del manubrio sopra la serie sterzo. L'apertura di 24° della curva e l'angolo esterno di 3° nella parte terminale offrono una stabilità superiore quando si guida su terreni impegnativi. Il reach e il drop sono stati ottimizzati nella forma EOS (Endurance Optimized Shape). La profondità di 55mm permette una posizione più ravvicinata delle leve freno mentre l'altezza di 100mm consente una posizione più confortevole e una veloce transizione dalle leve alla presa bassa. Con Gera Alloy hai a disposizione 90mm di area centrale a diametro costante 31.7 per montare qualsiasi accessorio o prolunghe. Manubrio disponibile in 4 misure 42, 44, 46 e 48.

EN • Gera® Alloy is made from 6061 aluminium using an innovative mechanical forming process that allows manufacturing a complex design such as Gera. It is the perfect choice for any gravel & adventure bike set-up. Multiple hands positions at the rider disposal to always find the best grip and position on gravel roads. The handlebar features a 10° backsweep angle and 5° downsweep for a more comfortable set-up for long distance bikepacking. A 10mm rise is an additional help to get the desired handlebar stack height. The 24° flare and 3° outsweep at the drops offers a superior stability when you are riding a challenging terrain. Reach and drop have been optimized in the EOS shape (Endurance Optimized Shape). The 55mm reach allows a closer position of brake levers while the 100mm compact drop is for more comfort and fast transition from lever to bar-end. With Gera Alloy you have a 90mm wide center area to install any accessory and clip-on bar extensions. Handlebar is available in 4 different sizes, 42, 44, 46 and 48.

Forma:
EOS (Endurance Optimized Shape)
Materiale:
Alluminio 6061, doppio spessore
Ø Manubrio:
31,7 mm
Profondità:
55 mm
Altezza:
100 mm
Flare:
24°
Angolo Esterno:
3°
Rialzo:
10° / 10 mm
Arretramento:
12° / 12mm
Inclinazione:
5°
Larghezza:
42 • 44 • 46 • 48 cm
(esterno-esterno in posizione delle leve)
Larghezza totale:
52 • 54 • 56 • 58 cm
Peso:
310 g (42 cm)
Finitura:
POB (Polish on black)
Note:
Compatibile DCR;
area centrale di 90 mm per il montaggio degli accessori e delle prolunghe Deda (Jet, Fast Pro, Parabolica).

Shape:
EOS (Endurance Optimized Shape)
Material:
6061 aluminium, double butted
Ø handlebar:
31,7 mm
Reach:
55 mm
Drop:
100 mm
Flare:
24°
Outsweep:
3°
Rise:
10° / 10 mm
Backsweep:
12° / 12mm
Downsweep:
5°
Width:
42 • 44 • 46 • 48 cm
(outside-to-outside at the lever position)
Full width:
52 • 54 • 56 • 58 cm
Weight:
310 g (42 cm)
Finish:
POB (Polish on black)
Notes:
DCR Compatible; 90 mm clamp area for mounting accessories and Deda clip-on bar (Jet, Fast Pro, Parabolica).

↓ Description	↓ Part Code	↓ EAN13 Code	↓ OEM Part Code	↓ EAN13 OEM Code
GERA, handlebar, aluminium 6061, Ø 31.7, 42 cm, EOS, POB, 10 mm rise, 24° flare	GERA42AL	8052783489857	GERA42ALX	8052783489840
GERA, handlebar, aluminium 6061, Ø 31.7, 44 cm, EOS, POB, 10 mm rise, 24° flare	GERA44AL	8052783489864	GERA44ALX	8052783489871
GERA, handlebar, aluminium 6061, Ø 31.7, 46 cm, EOS, POB, 10 mm rise, 24° flare	GERA46AL	8052783489871	GERA46ALX	8052783489895
GERA, handlebar, aluminium 6061, Ø 31.7, 48 cm, EOS, POB, 10 mm rise, 24° flare	GERA48AL	8052783489901	GERA48ALX	8052783489918

GERA Carbon

Tubeless Ready

Gravel Road

Le foto delle ruote mostrate con il disco montato sono solo per pura illustrazione. Le ruote sono vendute senza disco.
Wheels photos shown with disc brake rotor are for illustration purpose only. Wheels are sold without disc brake rotor.

IT • Le Gera® Carbon per copertoncino sono tra le ruote più leggere specificatamente progettate per gravel e non solo. Le ruote Gera Carbon associano leggerezza&performance per molteplici utilizzi. Il profilo alto 32 mm e largo 29 mm garantisce un imbattibile combinazione di velocità e comfort nell'off-road. Il cerchio da 29 mm di larghezza offre impareggiabile stabilità e durabilità in qualsiasi condizione se abbinato a gomme strada da 30mm. Il cerchio più largo di nuova generazione fornisce un miglior supporto al pneumatico e riduce la resistenza al rotolamento, aumentando al contempo la resistenza meccanica e l'aerodinamicità della ruota. Il cerchio è costruito con la tecnologia tubeless-ready per essere compatibile con pneumatici tipo copertoncino e tubeless.
Con un canale interno da 23 mm, le ruote gravel Gera Carbon sono progettate per adattarsi a gomme da 28 mm fino a 57 mm di sezione. Tutto ciò rende queste ruote il compagno perfetto per la tua prossima avventura gravel.

Il corpetto ruota libera presenta quattro cricchetti a sezione maggiorata che operano in modo indipendente garantendo un ingaggio più veloce e una più efficace trasmissione della forza di pedalata. Una molla indipendente e più larga aziona ciascuno dei singoli cricchetti garantendo un ingaggio sempre pronto e sicuro.

EN • The Gera® carbon clincher is one of the lightest wheelset specifically designed for gravel routes and beyond. Gera® wheels combine lightweight & performance for use across many disciplines. The 32 mm deep and 29 mm wide rim results in an unbeatable combination of speed and off-road comfort. The 29 wide profile leads to a superior stability and durability for any riding condition when combined to 30 mm road tires. The wider rim provides a better support to the tire and reduce the rolling resistance, increasing at the same time the wheel strength. The rim is also built with the tubeless-ready technology to be compatible with clincher and tubeless tires. With a 23 mm internal width, Gera® gravel disc wheels are designed to fit tire widths from 28 mm up to 57 mm. That make this wheelset the perfect companion for your next gravel adventure.

The freehub body features 4 independently operating pawls (leaf system) for very fast engagement and bigger pedal's force transmitting. An independent wider spring, under each pawl, guarantees solid engagement out of each pawl.

Materiale:
Struttura combinata in fibra di carbonio ad alto modulo ud e 3K
Altezza cerchio:
32 mm
Larghezza cerchio:
• 29 mm esterno
• 23 mm interno (etrto 622 × 23C)
Raggi:
24 raggi anteriore e posteriore, neri
Nippli:
nipplo autobloccante abs®, alluminio, 15 mm, colore nero
Mozzi:
Corpo in alluminio 6061, asse da 17 mm, ruota libera a 4 cricchetti indipendenti (leaf system)
Rotore freno a disco:
Shimano center lock
Thru-axle compatibilità:
• Anteriore 12 × 100 mm
• Posteriore 12 × 142 mm
Compatibilità cassetta:
Shimano, Sram XDR, Campagnolo, Campagnolo EKAR 13 V
Accessori inclusi:
Nastro cerchio tubeless, valvole tubeless, ghiera center-lock
Compatibilità pneumatici:
Per copertoncino o tubeless; min. 28 mm max. 57 mm
Peso:
1.445 g set

Material:
High modulus carbon fiber ud and 3K combined structure
Rim height:
32 mm
Rim width:
• 29 mm external
• 23 mm internal (etrto 622 × 23C)
Spokes:
24 spoke count, front and rear; black
Nipples:
self-locking abs® nipples, aluminum, 15 mm, black
Hub:
6061 alloy hub body, 17mm axle, 4 pawls freehub mechanism (Leaf system)
Disc brake rotor:
Shimano center lock
Thru-axle compatibility:
• Front 12 × 100 mm
• Rear 12 × 142 mm
Freehub:
Shimano, Sram XDR, Campagnolo, Campagnolo EKAR 13 SP
Accessories included:
Tubeless rim tape, tubeless valves, center-lock lockring
Tire compatibility:
Clincher or tubeless tire; min. 28 mm max. 57 mm
Weight:
1.445 g set

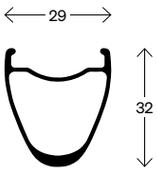

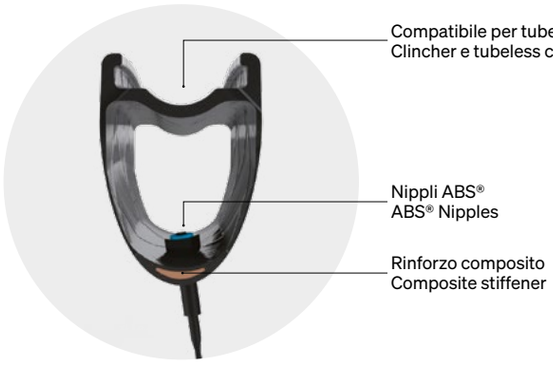

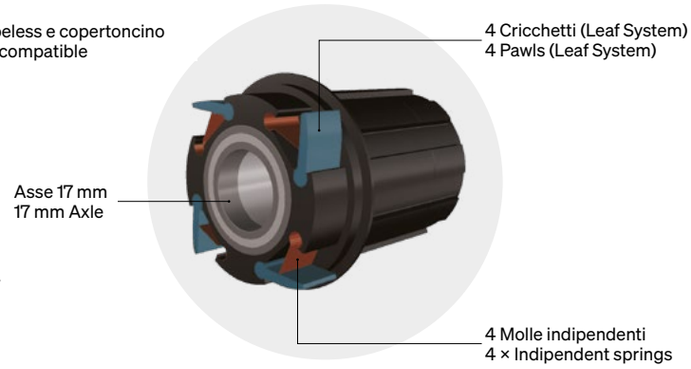

↓ Description	↓ Deda Part Code	↓ EAN13 Code
GERA CARBON, wheels, carbon, Tubeless-ready, 32 mm, 23C, Shimano	WDSL58POB	8052783487426
GERA CARBON, wheels, carbon, Tubeless-ready, 32 mm, 23C, Sram XDR	WDSL58POBXDR	8052783487433
GERA CARBON, wheels, carbon, Tubeless-ready, 32 mm, 23C, Campy	WDSL59POB	8052783487440
GERA CARBON, wheels, carbon, Tubeless-ready, 32 mm, 23C, Campy N3W	WDSL59POBN3W	8052783488560
GERA CARBON, front wheel, carbon, Tubeless-ready, 32 mm, 23C	WDSL60POB	8052783487457
GERA CARBON, rear wheel, carbon, Tubeless-ready, 32 mm, 23C, Shimano	WDSL61POB	8052783487464
GERA CARBON, rear wheel, carbon, Tubeless-ready, 32 mm, 23C, Sram XDR	WDSL61POBXDR	8052783487471
GERA CARBON, rear wheel, carbon, Tubeless-ready, 32 mm, 23C, Campy	WDSL62POB	8052783487488
GERA CARBON, rear wheel, carbon, Tubeless-ready, 32 mm, 23C, Campy N3W	WDSL62POBN3W	8052783488577

GERA Alloy

Tubeless Ready

Gravel Road

Le foto delle ruote mostrate con il disco montato sono solo per pura illustrazione. Le ruote sono vendute senza disco.
Wheels photos shown with disc brake rotor are for illustration purpose only. Wheels are sold without disc brake rotor.

IT • Le ruote Gera® Alloy garantiscono ottime prestazioni e solidità su strade gravel. Il profilo da 25 mm e largo 28 mm fornisce grande stabilità anche in terreni difficili. Il cerchio asimmetrico è costruito con la tecnologia tubeless-ready per essere compatibile con pneumatici tipo copertoncino e tubeless. Con un canale interno da 23 mm, le ruote gravel Gera Alloy sono progettate per adattarsi a gomme fino a 57 mm di sezione. Il mozzo posteriore presenta un corpetto ruota libera a quattro cricchetti con sezione maggiorata che operano in modo indipendente (Leaf system) per un angolo di ingaggio di soli 5° garantendo un ingaggio più veloce e un'efficace trasmissione della forza di pedalata. Una molla indipendente e più larga aziona ciascuno dei singoli cricchetti garantendo un ingaggio sempre pronto e sicuro. Disponibili per cassetta Shimano, Sram XDR o Campagnolo Ekar.

EN • Gera® Alloy wheels guarantees great performance and durability on gravel roads. The 25 mm profile and 28 mm wide rim provides a superior stability even in challenging terrains. The asymmetric rim is built with the tubeless-ready technology to be compatible with clincher and tubeless tires. With a 23 mm internal width, the Gera Alloy disc wheels fit tire widths up to 57 mm. The rear hub features a freehub body with 4 independently operating pawls (Leaf system) for only 5° angle engagement to provide an excellent pedal's force transmitting. An independent wider spring, under each pawl, guarantees solid engagement out of each pawl. Available for Shimano, Sram XDR or Campagnolo Ekar cassette.

Materiale:
6000 alloy series
Altezza cerchio:
25 mm
Larghezza cerchio:
• 28 mm esterno
• 23 mm interno (etrto 622 × 23C)
Raggi:
24 raggi anteriore e posteriore, neri
Nippli:
Nipplo autobloccante ABS®, alluminio, 15 mm, colore nero
Mozzi:
Corpo in alluminio 6061, asse da 17 mm, ruota libera a 4 cricchetti indipendenti (leaf system)
Rotore freno a disco:
Shimano center lock
Thru-axle compatibilità:
• Anteriore 12 × 100 mm
• Posteriore 12 × 142 mm
Compatibilità cassetta:
Shimano, Sram XDR, Campagnolo, Campagnolo EKAR 13 V
Accessori inclusi:
Tubeless rim tape, valvole tubeless, ghiera center-lock
Compatibilità pneumatici:
Per copertoncino o tubeless; min. 28 mm max. 57 mm
Peso:
1.690 g set

Material:
6000 alloy series
Rim height:
25 mm
Rim width:
• 28 mm external
• 23 mm internal (etrto 622 × 23C)
Spokes:
24 spoke count, front and rear; black
Nipples:
Self-locking ABS® nipples, aluminum, 15 mm, black
Hub:
6061 alloy hub body, 17 mm axle, 4 pawls freehub mechanism (Leaf system)
Disc brake rotor:
Shimano center lock
Thru-axle compatibility:
• Front 12 × 100 mm
• Rear 12 × 142 mm
Freehub:
Shimano, Sram XDR, Campagnolo, Campagnolo EKAR 13 SP
Accessories included:
Tubeless rim tape, tubeless valves, center-lock lockring
Tire compatibility:
Clincher or tubeless tire; min. 28 mm max. 57 mm
Weight:
1.690 g set

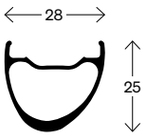

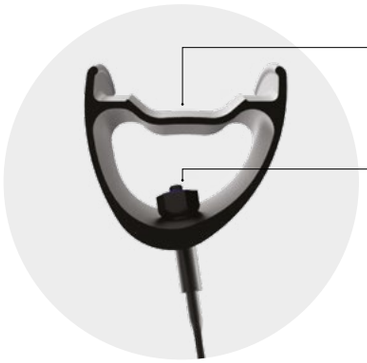

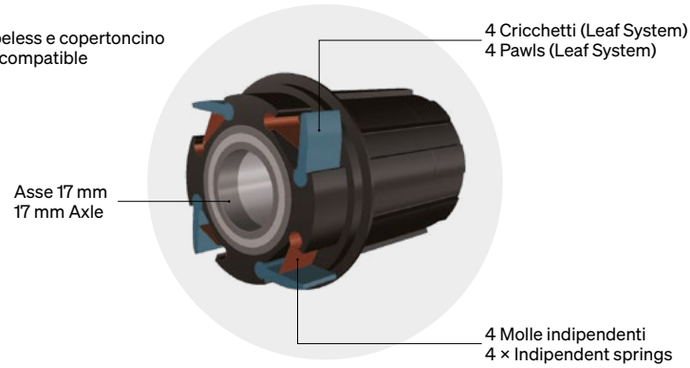

↓ Description	↓ Part Code	↓ EAN13 Code
GERA ALLOY, wheels, aluminium 6061, Tubeless-ready, 25 mm, 23C, Shimano	WDGEAL-SHI	8055774360296
GERA ALLOY, wheels, aluminium 6061, Tubeless-ready, 25 mm, 23C, Sram XDR	WDGEAL-XDR	8055774360319
GERA ALLOY, wheels, aluminium 6061, Tubeless-ready, 25 mm, 23C, Campy	WDGEAL-CA	8055774360302
GERA ALLOY, wheels, aluminium 6061, Tubeless-ready, 25 mm, 23C, Campy N3W	WDGEAL-N3W	8055774360326
GERA ALLOY, front wheel, aluminium, Tubeless-ready, 25 mm, 23C	WDGEAL-F	8055774360333
GERA ALLOY, rear wheel, aluminium, Tubeless-ready, 25 mm, 23C, Shimano	WDGEAL-RSHI	8055774360340
GERA ALLOY, rear wheel, aluminium, Tubeless-ready, 25 mm, 23C, Sram XDR	WDGEAL-RXDR	8055774360357
GERA ALLOY, rear wheel, aluminium, Tubeless-ready, 25 mm, 23C, Campy	WDGEAL-RCA	8055774360364
GERA ALLOY, rear wheel, aluminium, Tubeless-ready, 25 mm, 23C, Campy N3W	WDGEAL-RN3W	8055774360371

FORKS

IT • Le forcelle Deda con tecnologia DCR sono riconosciute per la loro qualità e la presenza su telai di alta gamma, in particolare quelli realizzati con tubi metallici come alluminio, acciaio e titanio. Grazie al suo background ingegneristico e i design innovativi, Deda offre una gamma di forcelle adatte sia per il ciclismo su strada che per quello gravel.

EN • Deda forks with DCR technology are widely recognized for their quality and are often featured on high-end bicycle frames, especially those crafted from metal tubes like alloy, steel and titanium. Deda offers a range of forks suitable for both road and gravel biking.

Gera Curvy

Gravel Road

IT • Gera Curvy è pensata per l'avventura e il bikepacking, dove tutti i dettagli sono stati curati per offrire maggiore scorrevolezza e comfort.

EN • Gera Curvy is designed for adventure and bikepacking, with meticulous attention to detail to ensure greater smoothness and comfort.

Gera EDG

Gravel Road

IT • Gera EDG ha un peso inferiore a 500 grammi ed un design pulito che la rende perfetta per affrontare i terreni più impegnativi.

EN • Gera EDG weighs less than 500 grams and features a clean design, making it perfect for tackling the most challenging terrain.

Allroad

Gravel Road

IT • Allroad è disegnata per prestazioni elevate, eccellente per affrontare vari terreni, dai percorsi asfaltati ai sentieri gravel.

EN • Allroad represents an excellent choice on various road surfaces, from smooth pavement to rough gravel paths.

EDG Road

Road

IT • EDG Road è ideale per chi cerca un componente di alta qualità per migliorare l'efficienza e la reattività della propria bici da strada.

EN • EDG Road is ideal for those seeking a high-quality component to enhance the efficiency and responsiveness of their road bike.

GERA CURVY

Gravel Road

Carbonio UD
con logo POB
UD carbon
with POB logo

Compatibile con Deda *Disc brake rotor*.
Vedi dedaelementi.com.
Compatible with Deda *Disc brake rotor*.
See dedaelementi.com.

IT • Gera Curvy è la forcella gravel perfetta per adventure e bikepacking in cui tutti i dettagli sono stati ideati con lo scopo di rispondere a una esigenza specifica. La prima forcella gravel compatibile con un disco da 180 mm per garantire la migliore frenata possibile anche in condizioni di carico importante. La forcella è stata concepita per permettere l'integrazione dei cavi all'interno del telaio grazie al design D-shape del cannotto e al sistema DCR. Risulta compatibile con la maggior parte dei telai in commercio, sia carbonio che metallo. È caratterizzata da una costruzione interamente in carbonio con il cono di base da 45° integrato. Il triplo attacco sui foderi della forcella offre multiple soluzioni per il montaggio di fork cages per bikepacking oltre agli inserti per il parafango. Compatibilità con penumatici fino a 57 mm (29") o 65 mm (27.5"). È predisposta per mozzi a dinamo, come SON®, per un integrazione ottimale del cavi elettrici all'interno del fodero della forcella.

EN • Gera Curvy is the perfect gravel fork for adventure and bikepacking in which all the details have been designed with the aim of responding to a specific need. The first gravel fork fitting a 180 mm rotor disc to guarantee the best possible braking even under heavy load conditions. The fork has been designed to allow the integration of the cables inside the frame thanks to a D-shape fork steerer and the DCR system. It is compatible with most of the frames on the market, both carbon and metal. It features a full carbon construction with an integrated 45° crown race, triple cage mounts on each fork blade for bikepacking front bags as well as inserts for fender mounts. Tire clearance up to 57 mm (29") or 65 mm (27.5"). It is ready for dynamo hubs, such as SON®, for optimal integration of the electric cables inside the fork.

Materiale:
Full carbon, finitura UD
Cannotto forcella:
1" 1/8 con forma D-Shape
Compatibilità serie sterzo:
• Cuscinetto superiore 1" 1/8
• Cuscinetto inferiore 1.5"
• Cono di base integrato a 45°
Lunghezza cannotto:
350 mm
Lunghezza axle-crown:
398 mm
Avanzamento:
50 mm
Compatibilità perno:
100 × 12 mm thru-axle (incluso)
Diametro testa forcella:
56 mm
Compatibilità rotore disco:
Flat mount, 160 o 180 mm
Max. carico forcella:
15 kg per lato (5 kg per rivetto)
Finitura:
Carbonio UD con logo POB
Accessori inclusi:
Perno passante (M12 × P1.5 × 120), expander e topcap per D-shape.

Material:
Full carbon fiber, UD finish
Fork steerer:
D-Shape 1"1/8
Headset compatibility:
• Upper bearing 1" 1/8
• Lower bearing 1.5"
• 45° integrated crown race
Steerer length:
350 mm
Axle-crown lenght:
398 mm
Rake:
50 mm
Axe compatibility:
100 × 12 mm thru-axle (included)
Crown diameter:
56 mm
Disc brake rotor compatibility:
Flat mount, 160 or 180 mm
Max. fork load:
15 kg per side (5 kg per eyelet)
Finish:
UD carbon with POB logo
Accessories included:
Thru-axle (M12 × P1.5 × 120), D-shape custom expander and topcap.

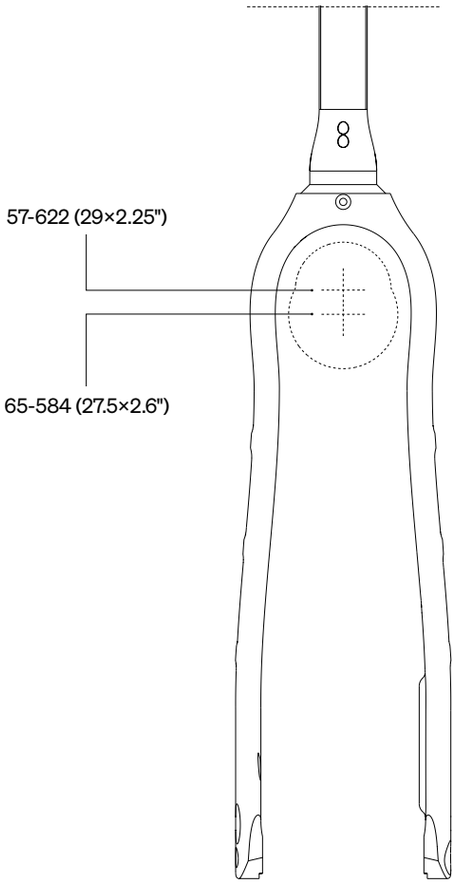

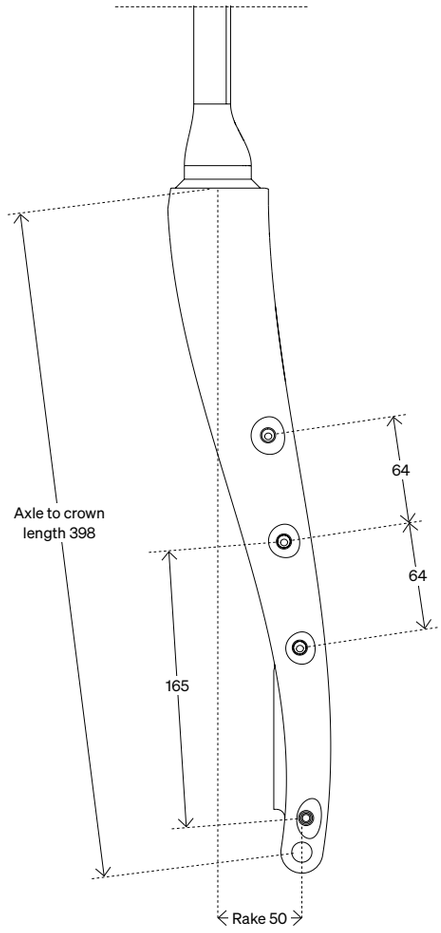

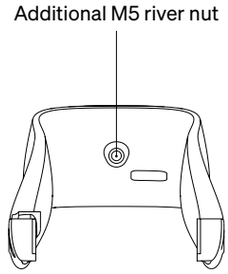

Compatibile con
Deda *Fork Cage Extender*.
Compatible with
Deda *Fork Cage Extender*.

Peso: 545 g
Note: triplice attacco per borse anteriori, predisposta per parafanghi e mozzo a dinamo SON®.
Compatibilità telai: aualsiasi telaio predisposto per passaggio cavi interni con serie sterzo Deda DCR, Deda Classic1 e Classic2 o serie sterzo conica da 1" 1/8-1.5" / 1" 1/4-1.5" / 1.5" -1.5"
Compatibilità attacchi: tutti gli attacchi Deda o attacchi da 1 1/8" che presentano una adeguata apertura tra cannotto forcella e corpo dell'attacco per il passaggio interno dei cavi.
Compatibilità ruote e pneumatici: 622 × 57 (29"×2.25"), 584 × 65 (27.5"×2.6"), in funzione del produttore di pneumatico/cerchio utilizzato.
Compatibilità cuscinetti:
• Superiore: con serie sterzo/tubo sterzo da 1" 1/8, 1" 1/4 o 1.5"
• Inferiore: cuscinetto da 1.5"; angolo contatto cuscinetto 45°
Passaggio cavi interno: con attacco convenzionale compatibile fino a 3 cavi; con attacco DCR compatibile fino a 4 cavi.
Minimo spazio del pneumatico: 10 mm (29"×2.25"), 8 mm (27.5"×2.6")
Tolleranza centraggio ruota: +/- 1,5 mm

Weight: 545 g
Note: triple-mounts for front bags, mounts for fenders, ready for SON®-dynamo hub.
Frames compatibility: any bicycle frame featuring internal cable routing system and fitting Deda DCR headset, Deda Classic 1 or tapered 1" 1/8-1.5" / 1" 1/4 -1.5" / 1.5" -1.5"
Stems compatibility: all the Deda stems or the stems with a large opening between the fork steerer and stem body to allow the internal cable routing.
Wheel and tire compatibility: 622 × 57 (29"×2.25"), 584 × 65 (27.5"×2.6"), depending on tire/rim manufacturer.
Bearings compatibility:
• Upper: headset/frame headtube with 1" 1/8, 1" 1/4 or 1.5"
• Lower: 1.5" bearing; 45° contact angle bearing
Internal cables routing: With a standard stem up to 3 cables; with a DCR stem up to 4 cables.
Minimum Tire Clearance: 10 mm (29"×2.25"), 8 mm (27.5"×2.6")
Wheel centering tolerance: +/- 1,5mm

↓ Description	↓ Deda Part Code	↓ EAN13 Code
GERA CURVY, fork, carbon, 398 mm axle-crown, D-Shape, DCR system, POB	MFF001Z181	8055774363860

GERA EDG

Gravel Road

Carbonio UD
con logo POB
UD carbon
with POB logo

Compatibile con Deda *Disc brake rotor*.
Vedi dedaelementi.com.
Compatible with Deda *Disc brake rotor*.
See dedaelementi.com.

IT • Gera EDG è una forcella gravel superleggera sotto i 500g dal design essenziale perfetta per un uso all road. I foderi dritti garantiscono reattività su percorsi veloci o in uso stradale. È la prima forcella gravel compatibile con un disco anche da 180mm e è stata concepita per permettere l'integrazione dei cavi all'interno del telaio grazie al design D-shape del cannotto e al sistema DCR. Risulta compatibile con la maggior parte di telai in commercio, sia carbonio che metallo. È caratterizzata da una costruzione interamente in carbonio con il cono di base da 45° integrato. Compatibilità con penumatici fino a 45mm (28") o 50mm (27.5"). L'ottimale integrazione dei cavi elettrici all'interno del fodero e del cannotto rendono Gera EDG il prodotto perfetto per l'abbinamento a mozzi dinamo (es. SON®).

EN • Gera EDG is a superlight gravel fork under 500 grams with a clean design and perfect for all road use. Straight blades for superior reactivity on fast gravel or paved roads. The first gravel fork fitting also a 180mm rotor disc and designed to allow the integration of the cables inside the frame thanks to a D-shape fork steerer and the DCR system. It is compatible with most of bicycle frames on the market, both carbon and metal. It features a full carbon construction with an integrated 45° crown race. Tire clearance up to 45mm (28") or 50mm (27.5"). It is ready for dynamo hubs (i.e. SON®) for optimal integration of the electric cables inside the fork.

Materiale:
Full carbon, finitura UD
Cannotto forcella:
1" 1/8 con forma D-Shape
Compatibilità serie sterzo:
• Cuscinetto superiore 1" 1/8
• Cuscinetto inferiore 1.5"
• Cono di base integrato a 45°
Lunghezza cannotto:
350 mm
Lunghezza axle-crown:
398 mm
Avanzamento:
50 mm
Compatibilità perno:
100 × 12 mm thru-axle (incluso)
Diametro testa forcella:
56 mm
Compatibilità rotore disco:
Flat mount, 160 o 180 mm
Finitura:
Carbonio UD con logo POB
Accessori inclusi:
Perno passante (M12 × P1.5 × 120), expander e topcap per D-shape.

Material:
Full carbon fiber, UD finish
Fork steerer:
D-Shape 1"1/8
Headset compatibility:
• Upper bearing 1" 1/8
• Lower bearing 1.5"
• 45° integrated crown race
Steerer length:
350 mm
Axle-crown lenght:
398 mm
Rake:
50 mm
Axe compatibility:
100 × 12 mm thru-axle (included)
Crown diameter:
56 mm
Disc brake rotor compatibility:
Flat mount, 160 or 180 mm
Finish:
UD carbon with POB logo
Accessories included:
Thru-axle (M12 × P1.5 × 120), D-shape custom expander and topcap.

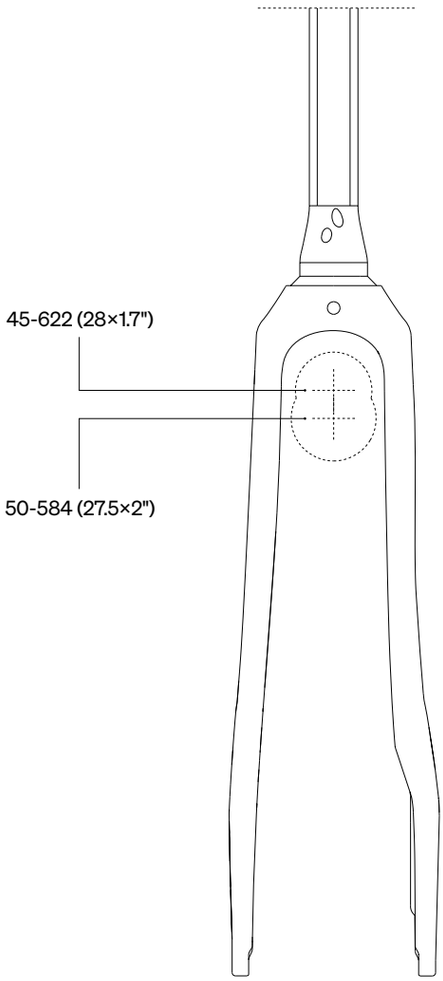

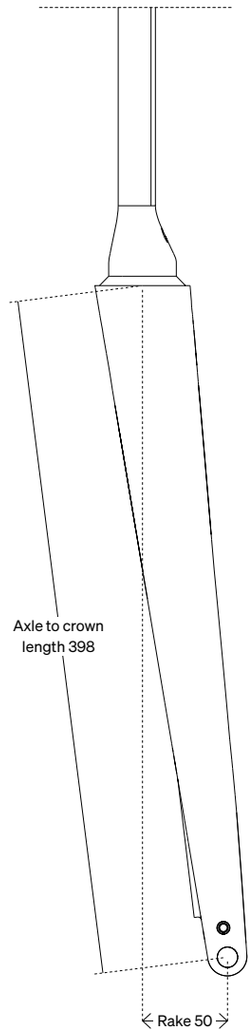

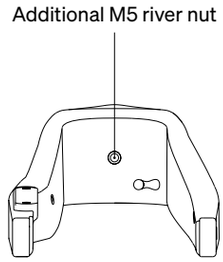

Peso: 498 g
Note: predisposta per montaggio parafango e mozzo a dinamo SON®
Compatibilità telai: qualsiasi telaio predisposto per passaggio cavi interni con serie sterzo Deda DCR, Deda Classic1 e Classic2 o serie sterzo conica da 1" 1/8-1.5" / 1" 1/4-1.5" / 1.5" -1.5"
Compatibilità attacchi: tutti gli attacchi Deda o attacchi da 1 1/8" che presentano una adeguata apertura tra cannotto forcella e corpo dell'attacco per il passaggio interno dei cavi
Compatibilità ruote e pneumatici: 622 × 45 (28"×1.7"), 584 × 50 (27.5"×2.0").
Compatibilità cuscinetti:
• Superiore: con serie sterzo/tubo sterzo da 1" 1/8, 1" 1/4 o 1.5"
• Inferiore: cuscinetto da 1.5"; angolo contatto cuscinetto 45°
Passaggio cavi interno: con attacco convenzionale compatibile fino a 3 cavi; con attacco DCR compatibile fino a 4 cavi
Tolleranza centraggio ruota: +/- 1,5 mm

Weight: 498 g
Note: fender mounts, ready for SON®-dynamo hub
Frames compatibility: any bicycle frame featuring internal cable routing system and fitting Deda DCR headset, Deda Classic 1 or tapered 1" 1/8-1.5" / 1" 1/4 -1.5" / 1.5" -1.5"
Stems compatibility: all the Deda stems or the stems with a large opening between the fork steerer and stem body to allow the internal cable routing.
Wheel and tire compatibility: 622 × 45 (28"×1.7"), 584 × 50 (27.5"×2.0").
Bearings compatibility:
• Upper: headset/frame headtube with 1" 1/8, 1" 1/4 or 1.5"
• Lower: 1.5" bearing; 45° contact angle bearing
Internal cables routing: with a standard stem up to 3 cables; with a DCR stem up to 4 cables.
Wheel centering tolerance: +/- 1,5mm

↓ Description	↓ Deda Part Code	↓ EAN13 Code
GERA EDG, fork, carbon, 398 mm axle-crown, D-Shape, DCR system, POB	MFF001Z180	8055774363853

ALLROAD

Gravel Road

Compatibile con Deda *Disc brake rotor*.
Vedi dedaelementi.com.
Compatible with Deda *Disc brake rotor*.
See dedaelementi.com.

IT • Allroad è una forcella superleggera ideale per utilizzo allroad. Il design facilita l'integrazione dei cavi all'interno del telaio, grazie al suo cannotto forcella con sezione "D-shape" e al sistema DCR di Deda. Compatibile con la maggior parte dei telai sul mercato, in carbonio o metallo. La sua struttura interamente in carbonio, assieme al crown race integrato con angolo di 45°, garantisce resistenza e performance di alto livello. È progettato per ospitare mozzi dinamo, come SON®, consentendo un'integrazione ottimale di cavi elettrici all'interno della forcella.

EN • Allroad is a superlight fork ideal for all-road use. The design facilitates the integration of cables inside the frame, thanks to its D-shape fork steerer and the DCR system. Compatible with most bicycle frames on the market, whether they are made of carbon or metal. Its full carbon construction, coupled with an integrated 45° crown race, ensures both strength and lightweight performance. It is designed to accommodate dynamo hubs, such as the SON®, allowing for optimal integration of electric cables inside the fork.

Materiale:
Monoscocca carbonio, finitura UD
Cannotto forcella:
1" 1/8 con forma D-Shape
Compatibilità serie sterzo:
• Cuscinetto superiore 1" 1/8
• Cuscinetto inferiore 1.5"
• Cono di base integrato a 45°
Lunghezza cannotto:
350 mm
Lunghezza axle-crown:
370 mm
Avanzamento:
45 mm
Compatibilità perno:
100 × 12 mm thru-axle (incluso)
Diametro testa forcella:
56 mm
Compatibilità rotore disco:
Flat mount, 140 o 160 mm
Finitura:
Carbonio UD con logo POB
Accessori inclusi:
Perno passante (M12 × P1.5 × 115,5), expander e topcap per D-shape.

Material:
Carbon monocoque, UD finish
Fork steerer:
D-Shape 1"1/8
Headset compatibility:
• Upper bearing 1" 1/8
• Lower bearing 1.5"
• 45° integrated crown race
Steerer length:
350 mm
Axle-crown lenght:
370 mm
Rake:
45 mm
Axle compatibility:
100 × 12 mm thru-axle (included)
Crown diameter:
56 mm
Disc brake rotor compatibility:
Flat mount, 140 or 160 mm
Finish:
UD carbon with POB logo
Accessories included:
Thru-axle (M12 × P1.5 × 115,5), D-shape custom expander and topcap

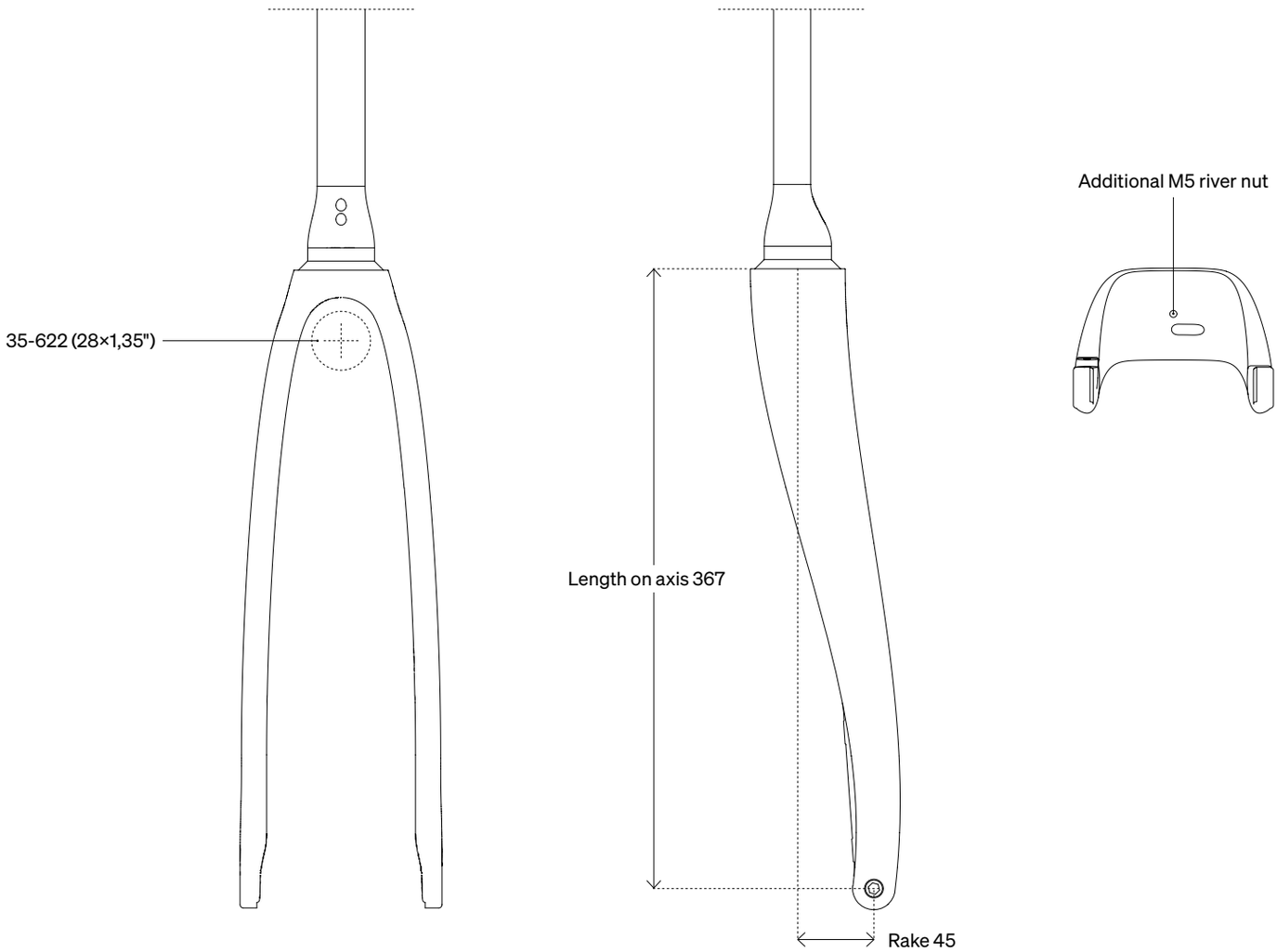

Peso: 420 g
Note: Predisposta per montaggio parafango e mozzo a dinamo SON®.
Compatibilità telai: Qualsiasi telaio predisposto per passaggio cavi interni con serie sterzo Deda DCR, Deda Classic1 e Classic2 o serie sterzo conica da 1" 1/8-1.5" / 1" 1/4-1.5" / 1.5" -1.5"
Compatibilità attacchi: tutti gli attacchi Deda o attacchi da 1 1/8" che presentano una adeguata apertura tra cannotto forcella e corpo dell'attacco per il passaggio interno dei cavi.
Compatibilità ruote e pneumatici: 622 × 35 (28" × 1.35") in funzione del produttore di pneumatico/cerchio utilizzato.
Compatibilità cuscinetti:
• Superiore: con serie sterzo/tubo sterzo da 1" 1/8, 1" 1/4 o 1.5"
• Inferiore: cuscinetto da 1.5"; angolo contatto cuscinetto 45°
Passaggio cavi interno: con attacco convenzionale compatibile fino a 3 cavi; con attacco DCR compatibile fino a 4 cavi.
Minimo spazio del pneumatico interno forcella: 5 mm (28" × 1.35")
Tolleranza centraggio ruota: +/- 1,5 mm

Weight: 450 g
Note: Fender mounts, ready for SON®-dynamo hub
Frames compatibility: any bicycle frame featuring internal cable routing system and fitting Deda DCR headset, Deda Classic 1 or tapered 1" 1/8-1.5" / 1" 1/4 -1.5" / 1.5" -1.5"
Stems compatibility: all the Deda stems or 1 1/8" stems with a large opening between the fork steerer and the stem body to allow the internal cable routing.
Wheel and tyre compatibility: 622 × 35 (28" × 1.35") depending on tire/rim manufacturer.
Bearings compatibility:
• Upper: headset/frame headtube with 1" 1/8, 1" 1/4 or 1.5"
• Lower: 1.5" bearing; 45° contact angle bearing
Internal cables routing: with a standard stem up to 3 cables; with a DCR stem up to 4 cables.
Minimum Tire Clearance at fork blade: 5 mm (28" × 1.35")
Wheel centering tolerance: +/- 1,5mm

↓ Description	↓ Deda Part Code	↓ EAN13 Code
ALLROAD, fork, carbon, 370 mm axle-crown, D-Shape, DCR system, POB	MFF001Z183	8055774366823

EDG ROAD

Road

Compatibile con Deda *Disc brake rotor*.
Vedi dedaelementi.com.
Compatible with Deda *Disc brake rotor*.
See dedaelementi.com.

IT • La forcella EDG ROAD è progettata per essere compatibile con telai bici da strada. Presenta una struttura interamente in fibra di carbonio, per garantire alte prestazioni. È progettata per essere compatibile sia con gli attacchi manubrio standard che con gli attacchi manubrio DCR (Deda Cable Routing), consentendo diverse opzioni per il passaggio dei cavi. Nello specifico: attacchi manubrio standard (fino a 3 cavi, ospitando due cavi freno e un cavo del cambio meccanico o elettronico); attacchi manubrio DCR (fino a 4 cavi, ospitando due cavi freno e due cavi del cambio meccanico o elettronico).

EN • EDG ROAD fork is designed to be compatible with a road bicycle frame. It is designed to be compatible with both standard stems and DCR (Deda Cable Routing) stems, allowing for different cable routing options. Specifically, it supports: standard stems (up to 3 cables, which can include two brake housing cables and one mechanical or electronic shifting cable); DCR stems (up to 4 cables, accommodating two brake housing cables and two shifting cables - mechanical or electronic).

Materiale:
Full carbon, finitura UD
Cannotto forcella:
1” 1/8 con forma D-Shape
Compatibilità serie sterzo:
• Cuscinetto superiore 1” 1/8
• Cuscinetto inferiore 1.5”
• Cono di base integrato a 45°
Lunghezza cannotto:
350 mm
Lunghezza axle-crown:
369 mm
Avanzamento:
45 mm
Compatibilità perno:
100×12 mm perno passante (incluso)
Diametro testa forcella:
56 mm
Compatibilità rotore disco:
Flat mount, 140 or 160 mm
Finitura:
Carbonio UD
Accessori inclusi:
Dedacciai "EXP" 23,5 mm e topcap

Material:
Full carbon fiber
Fork steerer:
D-Shape 1"1/8
Headset compatibility:
• Upper bearing 1” 1/8
• Lower bearing 1.5”
• 45° integrated crown race
Steerer length:
350 mm
Axle-crown lenght:
369 mm
Rake:
45 mm
Axe compatibility:
100×12 mm thru-axle
Crown diameter:
56 mm
Disc brake rotor compatibility:
Flat mount, 140 or 160 mm
Finish:
UD carbon
Accessories included:
Dedacciai "EXP" 23,5 mm and topcap

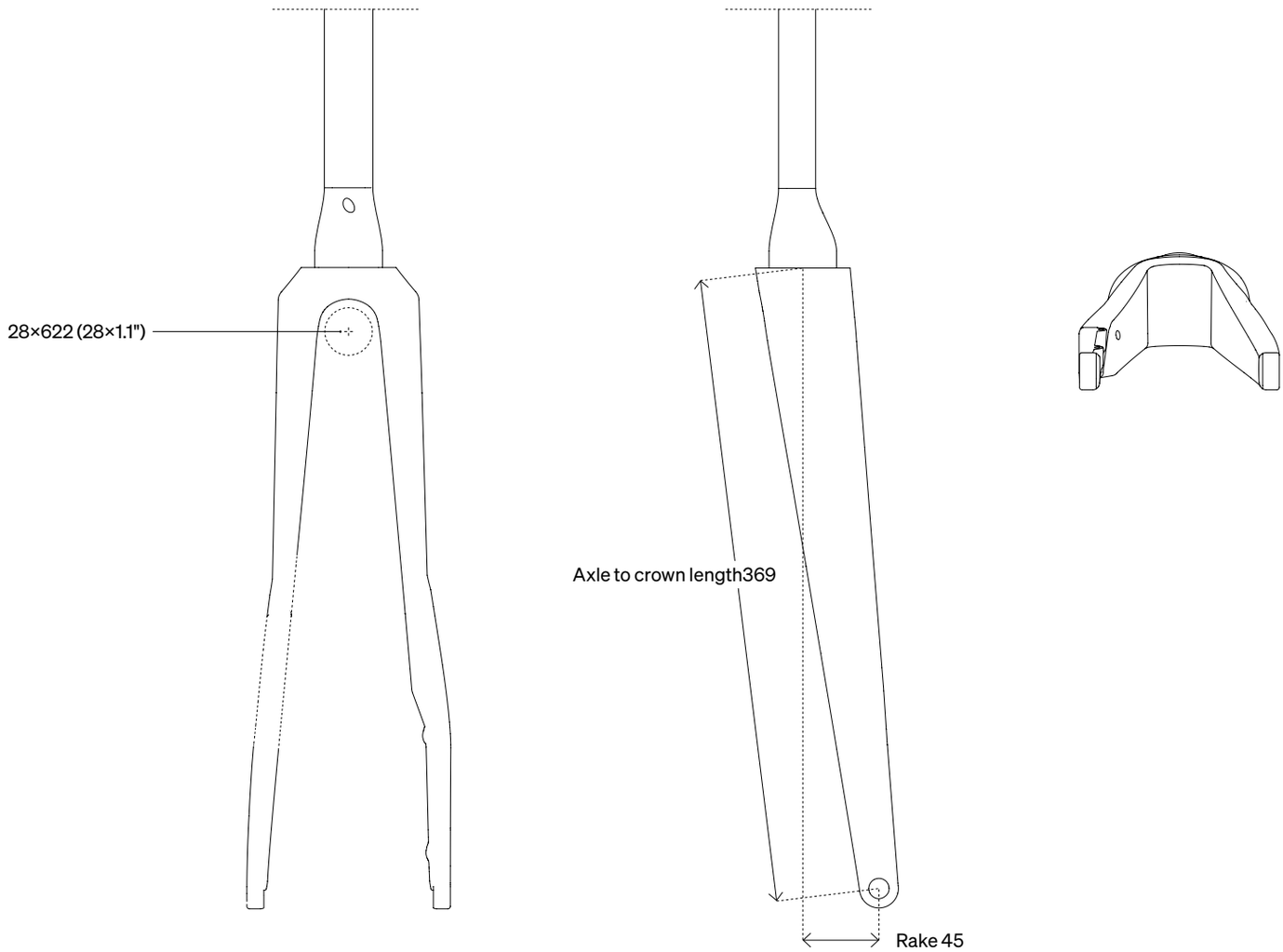

Peso: 414 gr (460 gr con verniciatura e viti)
Compatibilità telai: qualsiasi telaio predisposto per passaggio cavi interni con serie sterzo Deda DCR, Deda Classic1 e Classic2 o serie sterzo conica da 1" 1/8-1.5" / 1" 1/4-1.5" / 1.5" -1.5"
Compatibilità attacchi: tutti gli attacchi Deda o attacchi da 1 1/8" che presentano una adeguata apertura tra cannotto forcella e corpo dell'attacco per il passaggio interno dei cavi.
Compatibilità ruote e pneumatici: Spazio massimo per gli pneumatici fino a 622 × 28 mm (28" × 1.1")
Compatibilità cuscinetti:
• Superiore: con serie sterzo/tubo sterzo da 1" 1/8, 1" 1/4 o 1.5"
• Inferiore: cuscinetto da 1.5"; angolo contatto cuscinetto 45°
Passaggio cavi interno: con attacco convenzionale compatibile fino a 3 cavi (due cavi freno e cavo cambio meccanico/elettrico); con attacco DCR compatibile fino a 4 cavi (due cavi freno e due cavi cambio)
Tolleranza centraggio ruota: +/- 1,5 mm

Weight: 414 gr (460 gr painted + screws)
Frames compatibility: any bicycle frame featuring internal cable routing system and fitting Deda DCR headset, Deda Classic 1 or tapered 1" 1/8-1.5" / 1" 1/4 -1.5" / 1.5" -1.5"
Stems compatibility: all the Deda stems are compatible or the stems with a large opening between the fork steerer and stem body to allow the internal cable routing.
Wheel and tyre compatibility: Max tire clearance 622 × 28 mm (28" × 1.1")
Bearings compatibility:
• Upper: headset/frame headtube with 1" 1/8, 1" 1/4 or 1.5"
• Lower: 1.5" bearing; 45° contact angle bearing
Internal cables routing: with a standard stem up to 3 cables (two brakes housing cables and mechanical/electronic shifting cable); with a DCR stem up to 4 cables (two brakes housing cables and two shifting cables)
Wheel centering tolerance: +/- 1,5mm

↓ Description	↓ Deda Part Code	↓ EAN13 Code
EDG ROAD, fork, carbon, 369 mm axle-crown, D-Shape, DCR system, POB	MFF001Z184	8055774366953

Tecnologia Forcelle DCR
DCR Forks Technology

Forcella D-Shape
D-Shape Fork

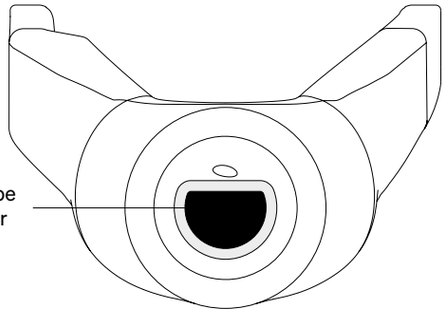

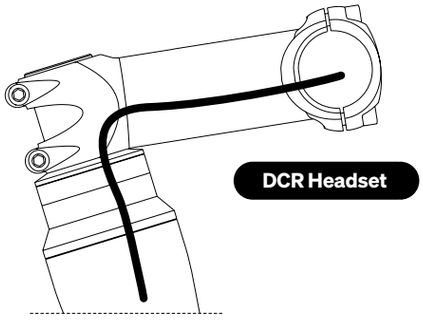

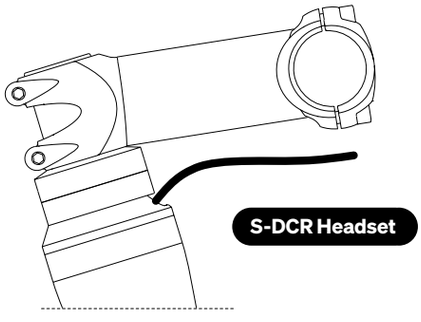

IT • Le forcelle Deda con tecnologia DCR si caratterizzano per un cannotto forcella da 1” 1/8 (28,6 mm) a sezione non circolare, chiamata D-shape. Grazie a questo design si crea una apertura a mezzaluna tra cannotto forcella e cuscinetto superiore, utile per il passaggio dei cavi all’interno del telaio. Le forcella con tecnologia D-shape sono compatibili con telai tradizionali con serie sterzo coniche da 1” 1/8 - 1.5”, 1” 1/4 - 1.5” o con telai con serie sterzo DCR 1.5” - 1.5”. È possibile utilizzare le forcelle per un’integrazione completa dei cavi con qualsiasi tipologia di gruppo per freni a disco (sia meccanico che elettronico) oppure con soluzioni S-DCR.

EN • Deda forks with DCR technology feature a 1” 1/8 (28.6 mm) steerer with a non-circular section, alias D-shape. This kind of design allows to create a space between the steerer tube and the upper bearing and to make the internal cable routing possible inside the frame. D-shape forks are compatible with traditional frames with 1” 1/8 - 1.5”, 1” 1/4 - 1.5” tapered headsets or with frames with 1.5” - 1.5” DCR headset. The forks can be used for a full cable integration with any type of disc brake groupset (both mechanical and electronic) or with S-DCR solutions.

Passaggio cavi mozzo dinamo e freno
Dymano hub and brake cable routing

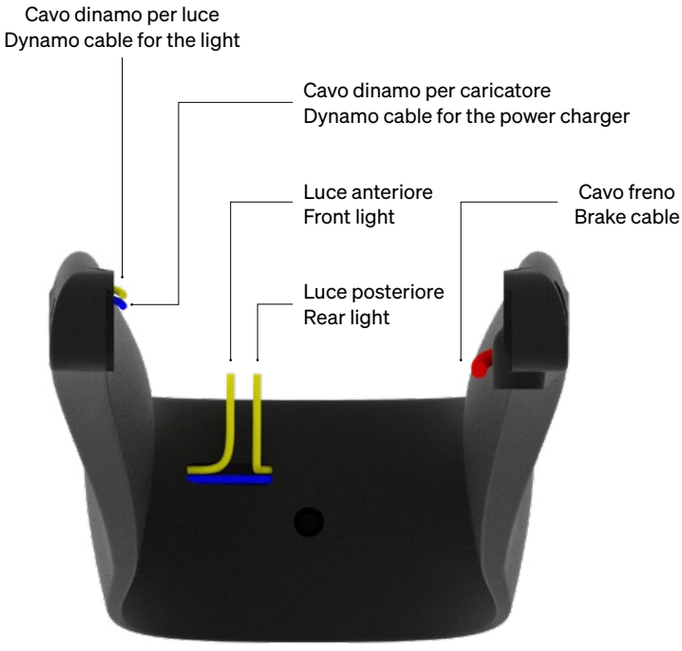

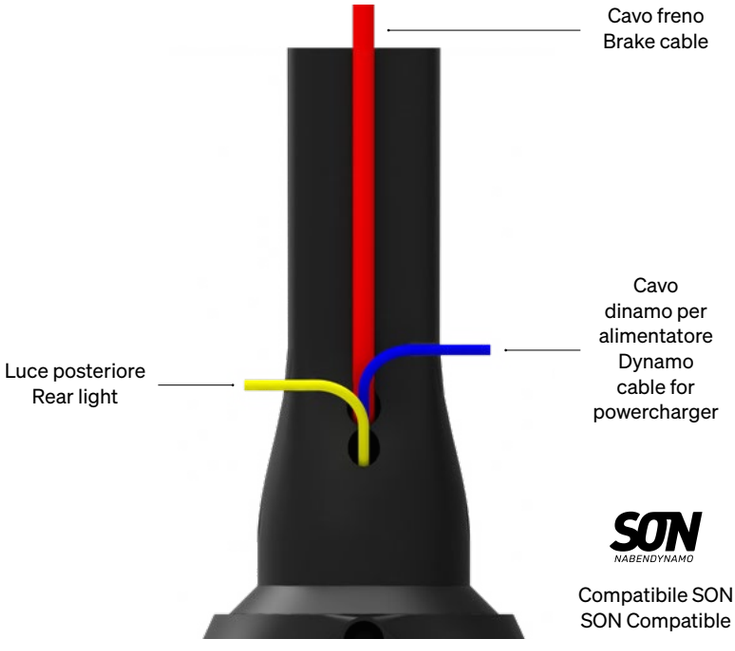

Compatibile SON
SON Compatible

IT • La forcella è stata progettata per garantire una totale integrazione del cavo freno idraulico anteriore e dei cavi elettrici nel caso di utilizzo con mozzo a dinamo. La forcella è compatibile con il passaggio interno dei cavi elettrici per la luce anteriore, luce posteriore e eventuale cavo per il power charger.

EN • The fork has been designed to guarantee the total integration of the hydraulic brake housing cable and electric cables when using a dynamo hub. The fork is compatible with internal cable routing for the front light, the rear light and the additional cable for the power charger.

Accessori forcelle
Fork accessories

Perno passante per forcella Allroad
Allroad thru axle fork

IT • Perno passante anteriore in alluminio per forcella Allroad.

Materiale:
Alluminio 7075-T6
Specifica:
M12×P1.5×115.5 mm
Finitura:
Nera con Dedacciai logo
Peso:
26 g

EN • Front Thru-Axle for Allroad fork.

Material:
Alloy 7075-T6
Specification:
M12×P1.5×115.5 mm
Finish:
Black with Dedacciai logo
Weight:
26 g

Perno passante forcella Gera Curvy, Gera EDG e EDG Road
Gera Curvy, Gera EDG and EDG Road Thru-Axle fork

IT • Perno passante anteriore in alluminio per forcelle gravel Gera Curvy, Gera EDG e EDG Road

Materiale:
Alluminio
Specifica:
M12×P1.5×120 mm
Finitura:
Nera con Dedacciai logo
Peso:
27 g

EN • Front Thru-Axle for gravel fork Gera Curvy, Gera EDG and EDG Road

Material:
Alloy
Specification:
M12×P1.5×120 mm
Finish:
Black with Dedacciai logo
Weight:
27 g

D-Shape Expander
D-Shape Expander

Settore D-shape
D-shape sector

IT • Expander specifico per forcelle modello DCR con cannotto D-shape. L'expander è fornito di un top cap con foro eccentrico e di uno spessore specifico D-shape per il montaggio con attacchi tradizionali.

Materiale expander:
Alluminio
Lunghezza:
70 mm
Materiale spessore D-shape:
Alluminio
Materiale top cap:
Alluminio
Vite:
Acciaio M6×20 mm
Finitura:
Nera con Dedacciai logo
Peso:
49 g (Incluso spessore D-shape & top cap)
Note:
L'expander include anche il top cap e lo spessore D-shape; compatibile con forcelle EDG Road, Gera Curvy, Gera EDG e Allroad.
Accessori:
Speciali topcap con foro eccentrico sono disponibili per Alanera RS (Cod. HDRS-TP-DX), Superzero (Cod. HDSZTPX-DX) e Superbox (Cod. HDSBXTP-4DX)

EN • Specific expander for DCR forks with a D-shape steerer The expander is supplied with a top cap with an eccentric hole and a specific D-shape spacer to be assembled with traditional stems.

Expander material:
Alloy
Length:
70 mm
D-shape spacer material:
Alloy
Top cap material:
Alloy
Screw:
Steel M6×20 mm
Finish:
Black with Dedacciai logo
Weight:
49 g (Including D-shape spacer & top cap)
Note:
The expander includes also top cap & D-shape spacer; compatible with EDG Road, Gera Curvy, Gera EDG forks and Allroad forks.
Accessories:
Custom topcap with eccentric hole are available for Alanera RS (Cod. HDRS-TP-DX), Superzero (Cod. HDSZTPX-DX) and Superbox (Cod. HDSBXTP-4DX)

↓ Description	↓ Deda Part Code	↓ EAN13 Code
Thru Axle, front, aluminium, Dedacciai, M12×P1.5×120	PP12012	8055774363884
Thru Axle Flat, front, aluminium, Dedacciai, M12×P1.5×120	PP12012-AR	8055774361040
Expander D-shape Fork, aluminium, 70 mm, includes top cap & D-shape spacer	EXP-DX	8055774363877

MTB

Cross	**166**
Cross Flat Bar → Manubrio/Handlebar	166
Cross → Attacco/Stem	167
Cross Team → Attacco/Stem	168
Cross 25 mm → Reggisella/Seatpost	169
Cross 0 mm → Reggisella/Seatpost	170

Peak	**172**
Peak Riser → Manubrio/Handlebar	172
Peak Flat → Manubrio/Handlebar	173
Peak → Attacco/Stem	174
Peak → Reggisella/Seatpost	175

CROSS Flat Bar

MTB

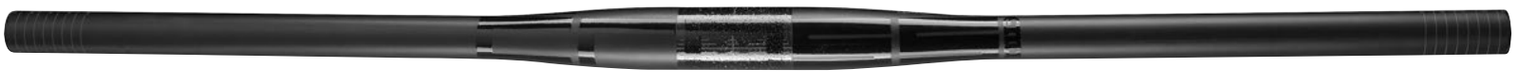

Finitura POB
POB Finish

IT • Manubrio flat in carbonio da 750 mm progettato con un angolo di rialzo di 0° specifico per 27,5" e 29", a chi ricerca una posizione bassa. Un back sweep da 3° permette di aggiustare la posizione di guida per un maggiore controllo e stabilità della bici.

EN • 750 mm carbon flat handlebar designed with a rise angle of 0° specific for 27.5" and 29", for those looking for a low position. A 3° back sweep allows you to fine tune your cockpit for greater control and stability of the bike.

Materiale:
Fibra di carbonio UD
Ø Manubrio:
Ø 31,7 mm
Larghezza:
750 mm
Rialzo:
0 mm
Up Sweep:
0°
Back Sweep:
3°
Peso:
170 g
Finitura:
POB (Polish on black)
Note:
Raccomandato solo per montaggio con attacchi Cross e Peak. Non compatibile con bar-end.

Material:
UD Carbon Fiber
Clamp diameter:
Ø 31,7 mm
Width:
750 mm
Rise:
0mm
Up sweep:
0°
Back Sweep:
3°
Weight:
170 g
Finish:
POB (Polish on black)
Note:
Recommended mounting with Cross and Peak stems only.
No bar-end compatible.

↓ Description	↓ Deda Part Code	↓ EAN13 Code
MUD CROSS FLAT, handlebar, carbon, 750 mm, rise 0°, setback 3°	MUDCRF750	8052783484012

CROSS

MTB

Finitura POB
POB Finish

Compatibile con S-DCR Cover Kit. Vedi pagina 13.
Compatible with S-DCR Cover kit. See page 13.

IT • La serie Cross è composta da componenti superleggeri per ciclisti molto esigenti. L'attacco Cross è la scelta perfetta per chi ricerca leggerezza e resistenza. Le viti in titanio e un frontalino ridisegnato portano il peso al limite di 100 grammi. Disponibile nelle misure da 80 a 110 mm con finitura POB (Polish on black).

EN • The Cross series is made up of superlight components for high demanding riders. The Cross stem is the perfect choice for people looking for an extreme lightness. Special titanium screws and a redesigned faceplate bring the weight to the limit of 100 grams. Available in sizes from 80 to 110 mm and POB (Polish on black) finish.

Materiale:
Alluminio 2014
Viteria:
Titanio Pvd Nera
Angolo:
84°
Ø Manubrio:
31,7 mm
Cannotto Forcella:
1 1/8” (28,6mm)
Altezza attacco:
38 mm
Misure:
80 • 90 • 100 • 110 mm
Peso:
109 g (110 mm)
Finitura:
POB (Polish on black)
Note:
Raccomandato solo per montaggio con manubri Cross & Peak.

Material:
Alloy 2014
Screws:
Titanium Pvd Black
Angle:
84°
Clamp diameter:
31,7 mm
Fork Steerer:
1 1/8” (28,6mm)
Clamp Height:
38 mm
Sizes:
80 • 90 • 100 • 110 mm
Weight:
109 g (110 mm)
Finish:
POB (Polish on black)
Note:
Recommended mounting with Cross & Peak handlebars only.

↓ Description	↓ Deda Part Code	↓ EAN13 Code
MUD CROSS, stem, aluminium 2014, 80 mm, 84° (+6°), bolts titanium PVD	MUDCR080	8052783483930
MUD CROSS, stem, aluminium 2014, 90 mm, 84° (+6°), bolts titanium PVD	MUDCR090	8052783483947
MUD CROSS, stem, aluminium 2014, 100 mm, 84° (+6°), bolts titanium PVD	MUDCR100	8052783483954
MUD CROSS, stem, aluminium 2014, 110 mm, 84° (+6°), bolts titanium PVD	MUDCR110	8052783483961

CROSS Team

MTB

Finitura POB
POB Finish

IT • Cross Team è un attacco da 70° con un design piatto aggressivo che si adatta a qualsiasi bici da 29" o 27,5". L'attacco Cross è la scelta perfetta per chi ricerca la migliore posizione in bici. Realizzato in alluminio 6061 con un frontalino monoblocco. Disponibile nelle misure da 60 a 90 mm con finitura POB (Polish on black).

EN • Cross team is a 70° stem with has an aggressive flat design that fits any 29" or 27.5" bike.The Cross stem is the perfect choice for people looking for the best position. Made in 6061 aluminium with a solid 1-piece faceplate. Available in sizes from 60 to 90 mm and POB (Polish on black) finish.

Materiale:
Alluminio 6061
Viteria:
Titanio PVD Nera
Angolo:
70° (-20°)
Ø Manubrio:
31,7 mm
Cannotto Forcella:
1 1/8" (28,6 mm)
Altezza attacco:
35 mm
Misure:
60 • 70 • 80 • 90 mm
Peso:
150 g (90 mm)
Finitura:
POB (Polish on black)
Note:
Raccomandato solo per montaggio con manubri Cross e Peak.

Material:
Alloy 6061
Screws:
Titanium PVD Black
Angle:
70° (-20°)
Clamp diameter:
31,7 mm
Fork Steerer:
1 1/8" (28,6 mm)
Clamp Height:
35 mm
Sizes:
60 • 70 • 80 • 90 mm
Weight:
150 g (90 mm)
Finish:
POB (Polish on black)
Note:
Recommended mounting with Cross & Peak handlebars only.

↓ Description	↓ Deda Part Code	↓ EAN13 Code
MUD CROSS TEAM, stem, aluminium 6061, 60 mm, 70° (-20°), bolts titanium PVD	MUDCRTEAM060	8052783483978
MUD CROSS TEAM, stem, aluminium 6061, 70 mm, 70° (-20°), bolts titanium PVD	MUDCRTEAM070	8052783483985
MUD CROSS TEAM, stem, aluminium 6061, 80 mm, 70° (-20°), bolts titanium PVD	MUDCRTEAM080	8052783483992
MUD CROSS TEAM, stem, aluminium 6061, 90 mm, 70° (-20°), bolts titanium PVD	MUDCRTEAM090	8052783484005

CROSS 25 mm

MTB

Compatibile col kit montaggio luci al reggisella, *Staffa*. Vedi pagina 216.
Compatible with *Staffa* seatpost lights mount kit. See page 216.

DBA (For Shimano Di2)

Ø 27,2 mm | Ø 31,6 mm

IT • Reggisella Cross con arretramento da 25 mm. Ultraleggero di soli 180 grammi disegnato e prodotto senza compromessi in termini di affidabilità e resistenza. Sistema di fissaggio a una vite per una veloce e facile installazione. Regolazione micrometrica dell'inclinazione della sella attraverso une vite posizionata sulla testa del reggisella. Compatibile con selle con telaio ovale in carbonio (max Ø 7×9.5 mm). Disponibile in diametro 27.2 mm e 31.6 mm, lunghezza 400 mm.

EN • Cross seatpost featuring a 25 mm setback. 180 Grams ultralight seatpost designed and developed without compromises in terms of reliability and strength. The 1-bolt clamp system allows an easy and fast assembly. A fine adjustment of the saddle inclination is possible through the adjusting screw on the seatpost head. Compatible with oval-shaped carbon rail (max Ø 7×9.5 mm). Available in diameter 27.2 mm and 31.6 mm, 400 mm length.

Materiale:
Carbonio UD Monoscocca
Meccanica:
Alluminio CNC; Viteria Titanio PVD Nera
Lunghezza:
400 mm
Diametro:
Ø 27,2 • 31,6 mm
Arretramento:
25 mm
Peso:
180 g (Ø 27,2 mm)
Finitura:
POB (Polish on black)
Note:
compatibile con selle con telaio in carbonio ovale max Ø 7×9.5 mm. compatibile con adattatori Deda per batteria interna DI2.

Material:
UD Full Carbon Construction
Hardware:
CNC Alloy Plates; Titanium PVD Black Screws
Length:
400 mm
Diameter:
Ø 27,2 • 31,6 mm
Setback:
25 mm
Weight:
180 g (Ø 27,2 mm)
Finish:
POB (Polish on black)
Note:
compatible with a max Ø 7×9.5 mm oval-shaped rail. Fits Deda adapter for DI2 internal battery.

↓ Description	↓ Deda Part Code	↓ EAN13 Code
MUD CROSS, seatpost, carbon, 400 mm, Ø 31.6 mm, setback 25 mm	MUDCR316	8052783484029
MUD CROSS, seatpost, carbon, 400 mm, Ø 27.2 mm, setback 25 mm	MUDCR272	8052783484036

CROSS 0 mm

MTB

Finitura POB
POB Finish

Compatibile col kit montaggio luci al reggisella, *Staffa*. Vedi pagina 216.
Compatible with *Staffa* seatpost lights mount kit. See page 216.

DBA (For Shimano Di2)

Ø 27,2 mm

Ø 31,6 mm

IT • Reggisella cross con arretramento 0 mm. Il sistema minimale e leggero a 2-viti garantisce una precisa e facile regolazione della sella. Il tubo in carbonio unidirezionale offre un'eccezionale resistenza a fatica e impatto. Compatibile con selle con telaio ovale in carbonio (max Ø 7×9.5 mm). Disponibile in diametro 27.2 mm, 30.9 mm e 31.6 mm, lunghezza 400 mm.

EN • Cross seatpost with 0mm setback. The minimal and lightweight 2-bolt design guarantees a fine and easy saddle adjustment. The unidirectional carbon tube offers great fatigue and impact strength. Compatible with oval-shaped carbon rail (max Ø 7×9.5 mm). Available in diameter 27.2 mm, 30.9 mm and 31.6 mm, 400 mm length.

Materiale:
Carbonio UD; Testa In Alluminio 2014
Meccanica:
Alluminio Cnc; Viteria Acciaio
Lunghezza:
400 mm
Diametro:
Ø 27,2 • 30,9 • 31,6 mm
Arretramento:
0 mm
Peso:
240 g (Ø 27,2 mm)
Finitura:
POB (Polish on black)
Note:
Compatibile con selle con telaio in carbonio ovale max Ø 7×9.5 mm. compatibile con adattatori Deda per batteria interna DI2.

Material:
Carbon UD & 2014 Alloy Head
Hardware:
Cnc Alloy Plates; Steel Screws
Length:
400 mm
Diameter:
Ø 27,2 • 30,9 • 31,6 mm
Setback:
0 mm
Weight:
240 g (Ø 27,2 mm)
Finish:
POB (Polish on black)
Note:
Compatible with a max Ø 7×9.5 mm oval-shaped rail. Fits Deda adapter for DI2 internal battery.

↓ Description	↓ Deda Part Code	↓ EAN13 Code
MUD CROSS ZERO, seatpost, carbon&aluminium, 400 mm, Ø 31.6 mm, setback 0 mm	MUDCRZ316	8052783484043
MUD CROSS ZERO, seatpost, carbon&aluminium, 400 mm, Ø 30.9 mm, setback 0 mm	MUDCRZ309	8052783484067
MUD CROSS ZERO, seatpost, carbon&aluminium, 400 mm, Ø 27.2 mm, setback 0 mm	MUDCRZ272	8052783484050

PEAK Riser

MTB

IT • La linea Peak è composta da componenti adatti ad un utilizzo all mountain ed e-bike. Il manubrio Peak Riser è largo 780mm e presenta un rialzo di 20 mm e un arretramento di 5 ° per una posizione di guida più confortevole. La scelta perfetta per le e-bikes. Il manubrio è realizzato in alluminio 6061 per attacco da 31,7 mm.

EN • The Peak line is made up of components suitable for all mountain and e-bike use. The Peak riser handlebar is 780mm wide and features a 20mm rise and 5° back-sweep for a more upright and comfortable riding position. The perfect choice for e-bikes. The handlebar is made in 6061 aluminium for 31.7mm stem clamp.

Materiale:
Alluminio 6061
Ø Manubrio:
Ø 31,7 mm
Larghezza:
780 mm
Rialzo:
20 mm
Up Sweep:
5°
Back Sweep:
9°
Peso:
345 g
Finitura:
POB (Polish on black)
Note:
Raccomandato solo per montaggio con attacchi Cross & Peak.

Material:
Alloy 6061
Clamp diameter:
Ø 31,7 mm
Width:
780 mm
Rise:
20 mm
Up sweep:
5°
Back Sweep:
9°
Weight:
345 g
Finish:
POB (Polish on black)
Notes:
Recommended mounting with Cross & Peak stems only.

↓ Description	↓ Part Code	↓ EAN13 Code	↓ OEM Part Code	↓ EAN13 OEM Code
MUD PEAK RISER, handlebar, aluminium 6061, 780 mm, rise 9°/20 mm, setback 5°	MUDPKR780	8052783484142	MUDPKR780X	8052783484869

PEAK Flat

MTB

Finitura POB
POB Finish

IT • La linea Peak è composta da componenti adatti ad un utilizzo all mountain ed e-bike. Il manubrio Peak Flat è largo 780 mm e ha un arretramento di 3° che permette di aggiustare la posizione di guida per un maggiore controllo e stabilità della bici.
Il manubrio è realizzato in alluminio 6061 per attacco da 31,7 mm.

EN • The Peak line is made up of components suitable for all mountain and e-bike use. The Peak Flat handlebar is 780 mm wide and features a 3-degree back-sweep angle to fine-tune your cockpit for greater control and stability of the bike. The handlebar is made in 6061 aluminium for 31.7 mm stem clamp.

Materiale:
Alluminio 6061
Ø Manubrio:
Ø 31,7 mm
Larghezza:
780 mm
Rialzo:
0 mm
Up Sweep:
0°
Back Sweep:
3°
Peso:
315 g
Finitura:
POB (Polish on black)
Note:
Raccomandato solo per montaggio con attacchi Cross & Peak.

Material:
Alloy 6061
Clamp diameter:
Ø 31,7 mm
Width:
780 mm
Rise:
0mm
Up sweep:
0°
Back Sweep:
3°
Weight:
315 g
Finish:
POB (Polish on black)
Notes:
Recommended mounting with Cross & Peak stems only.

↓ Description	↓ Part Code	↓ EAN13 Code	↓ OEM Part Code	↓ EAN13 OEM Code
MUD PEAK FLAT, handlebar, aluminium 6061, 780 mm, setback 3°	MUDPKF780	8052783484159	MUDPKF780X	8052783484852

PEAK

MTB

Finitura POB
POB Finish

Compatibile con S-DCR Cover Kit. Vedi pagina 13.
Compatible with S-DCR Cover kit. See page 13.

IT • L'attacco Peak è realizzato in alluminio 6061, forgiato in 3D. È disponibile in un'ampia gamma di lunghezze da 50 a 110 mm con un angolo di 84. Ha una grafica reversibile per essere montato con angolo +/- 6 gradi, il modo migliore per trovare la tua posizione sulla bici.

EN • Peak stem is made in 6061 aluminium, 3D forged. It comes in a wide range of length from 50 to 110 mm with a 84-degree angle. It has reversible graphics to be mounted with positive or negative 6-degree angle. The best way to find your position on the bike.

Materiale:
Alluminio 6061
Viteria:
Acciaio, Nera
Angolo:
84°
Ø Manubrio:
31,7 mm
Cannotto Forcella:
1 1/8" (28,6mm)
Altezza attacco:
38 mm
Misure:
50 • 60 • 70 • 80 • 90• 100 • 110 mm
Peso:
140 g (110 mm)
Finitura:
POB (Polish on black)
Note:
Raccomandato solo per montaggio con manubri Cross & Peak.

Material:
Alloy 6061
Screws:
Steel, Black
Angle:
84°
Clamp diameter:
31,7 mm
Fork Steerer:
1 1/8" (28,6mm)
Clamp Height:
38 mm
Sizes:
50 • 60 • 70 • 80 • 90• 100 • 110 mm
Weight:
140 g (110 mm)
Finish:
POB (Polish on black)
Notes:
Recommended mounting with Cross & Peak handlebars only.

↓ Description	↓ Part Code	↓ EAN13 Code	↓ OEM Part Code	↓ EAN13 OEM Code
MUD PEAK, stem, aluminium 6061, 50 mm, 84°, reversible +/- 6°, bolts steel	MUDPK050	8052783484074	MUDPK050X	8052783484753
MUD PEAK, stem, aluminium 6061, 60 mm, 84°, reversible +/- 6°, bolts steel	MUDPK060	8052783484081	MUDPK060X	8052783484760
MUD PEAK, stem, aluminium 6061, 70 mm, 84°, reversible +/- 6°, bolts steel	MUDPK070	8052783484098	MUDPK070X	8052783484777
MUD PEAK, stem, aluminium 6061, 80 mm, 84°, reversible +/- 6°, bolts steel	MUDPK080	8052783484104	MUDPK080X	8052783484784
MUD PEAK, stem, aluminium 6061, 90 mm, 84°, reversible +/- 6°, bolts steel	MUDPK090	8052783484111	MUDPK090X	8052783484791
MUD PEAK, stem, aluminium 6061, 100 mm, 84°, reversible +/- 6°, bolts steel	MUDPK100	8052783484128	MUDPK100X	8052783484807
MUD PEAK, stem, aluminium 6061, 110 mm, 84°, reversible +/- 6°, bolts steel	MUDPK110	8052783484135	MUDPK110X	8052783484814

PEAK

MTB

Finitura POB
POB Finish

Compatibile col kit montaggio luci al reggisella, *Staffa*. Vedi pagina 216.
Compatible with *Staffa* seatpost lights mount kit. See page 216.

DBA (For Shimano Di2)

Ø 27,2 mm | Ø 31,6 mm

IT • Peak è un eccellente reggisella con regolazione a doppia vite. Il reggisella insieme a attacco e manubrio della serie Peak è un ottimo kit di finitura per qualsiasi bici all mountain o e-bike. Il reggisella è realizzato in alluminio 6061 e garantisce leggerezza e resistenza ad un prezzo molto competitivo. Disponibile in tre diametri 27.2, 30.9 e 31.6 mm con arretramento 20 mm.

EN • Peak is an excellent seatpost with twin-bolt screw adjustment. The seatpost along with stem and handlebar is a great finishing kit for any all mountain and e-bikes. The seatpost is made of 6061 aluminium and guarantees lightness and strength at a very competitive price. Available in three diameters 27.2, 30.9 and 31.6 mm with a 20 mm setback.

Materiale:
Alluminio 6061
Meccanica:
Alluminio Cnc; Viteria Acciaio
Lunghezza:
400 mm
Diametro:
Ø 27,2 • 30,9 • 31,6 mm
Arretramento:
20 mm
Peso:
295 g (Ø 27,2 mm)
Finitura:
POB (Polish on black)
Note:
Compatibile con selle con telaio in carbonio ovale max Ø 7×9.5 mm. compatibile con adattatori Deda per batteria interna DI2.

Material:
Alloy 6061
Hardware:
Cnc Alloy Plates; Steel Screws
Length:
400 mm
Diameter:
Ø 27,2 • 30,9 • 31,6 mm
Setback:
20 mm
Weight:
295 g (Ø 27,2 mm)
Finish:
POB (Polish on black)
Notes:
Compatible with a max Ø 7×9.5 mm oval-shaped rail. Fits Deda adapter for DI2 internal battery.

↓ Description	↓ Part Code	↓ EAN13 Code	↓ OEM Part Code	↓ EAN13 OEM Code
MUD PEAK, seatpost, aluminium 6061, 400 mm, Ø 31.6 mm, setback 20 mm	MUDPK316	8052783484173	MUDPK316X	8052783484845
MUD PEAK, seatpost, aluminium 6061, 400 mm, Ø 30.9 mm, setback 20 mm	MUDPK309	8052783484173	MUDPK309X	8052783484838
MUD PEAK, seatpost, aluminium 6061, 400 mm, Ø 27.2 mm, setback 20 mm	MUDPK272	8052783484166	MUDPK272X	8052783484821

CRONO

NEW **TT314®** → Adattatore clip-on/Clip-on adapter **178**

NEW **JET2 EVO** → Prolunghe/Extensions **182**

NEW Accessori JET2 EVO/JET2 EVO Accessories **184**

NEW **JET2 HYDRO** → Prolunghe/Extensions **186**

NEW **JET2 → JET1, Conversion kit** **188**

NEW TT Spacer Kit **189**

NEW Angled Spacers **189**

NEW **FAST PRO** → Prolunghe/Extensions **190**

NEW **PARABOLICA PRO** → Prolunghe/Extensions **192**

Cronoevo → Manubrio/Handlebar **194**

Tribar → Manubrio/Handlebar **196**

Carbon Blast → Prolunghe/Extensions **198**

Superzero TT → Prolunghe/Extensions **199**

Metal Blast → Prolunghe/Extensions **200**

Parabolica Uno → Prolunghe/Extensions **201**

Parabolica Due → Prolunghe/Extensions **202**

ADJ → Attacco/Stem **203**

Accessori/Accessories **204**

DECATHLON
AG2R LA MONDIALE
VAN RYSEL
VAN RYSEL
V|R
V|R
DURA-ACE
DURA-ACE

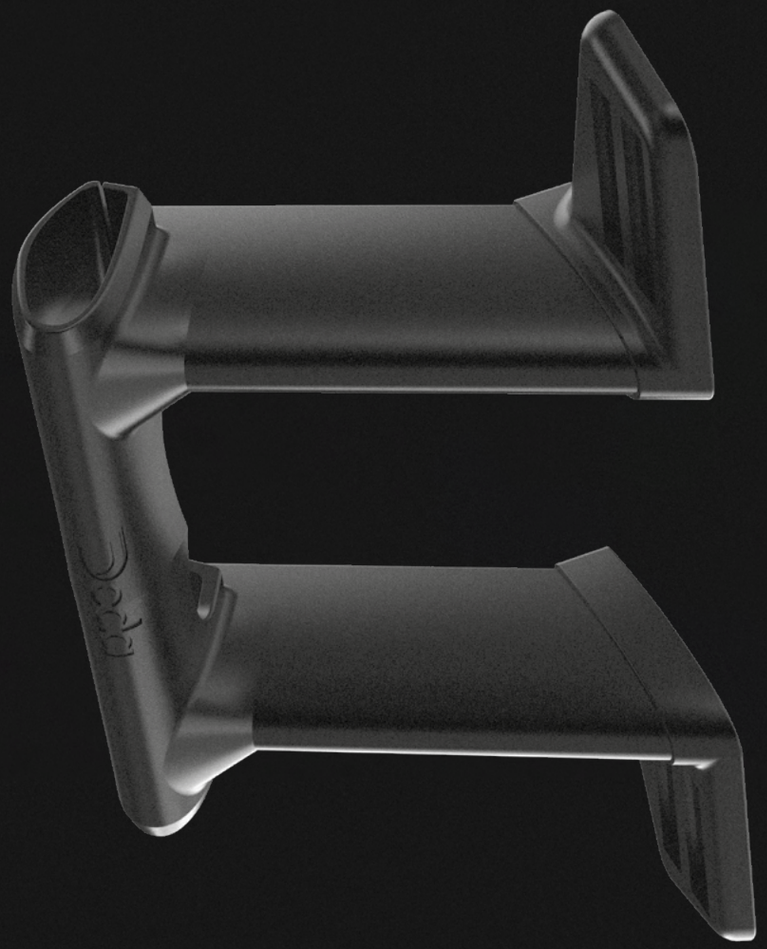
Deda

TT 314®

Merging of components • Nel ciclismo, ogni dettaglio è decisivo. Ogni curva, ogni connessione, ogni frazione di secondo può segnare il confine tra il compromesso e la perfezione. Ed è proprio dall'idea di π – la costante matematica infinita, assoluta, impeccabile – che nasce TT 314®: il punto d'incontro tra forma e funzione. Per troppo tempo, la geometria speciale dei manubri aero ha rappresentato una sfida. TT 314® è la soluzione. Progettata per integrarsi con le loro forme particolari, incarna la precisione e l'eleganza di π. Non è solo un accessorio; è un ponte tra il design e la funzionalità, un inno all'innovazione. Come il π, TT 314® è più che un semplice numero. È un simbolo di precisione, unità e potenzialità infinite. Perché nella ricerca della velocità assoluta, della prestazione perfetta, ogni connessione conta.

Merging of components • In cycling world, every detail matters. Every bend, every connection, every fraction of a second defines the difference between compromise and perfection. And just like the mathematical constant π - endless, precise, and absolute - TT 314® was born from a pursuit of flawless integration. For too long, aero handlebars unique shape posed a challenge, a missing link in the equation of adaptability with extensions. TT 314® is the solution. Realized to embrace their particular shapes, mirrors the mathematical brilliance of π. It is not just an accessory; it is the bridge between design and function, an ode to innovation. Like π itself, TT 314® is more than a number. It is a symbol of precision, of unity, of boundless possibilities. Because in the pursuit of speed, of performance, of perfection -every connection counts.

PATENTED **Made in Italy**

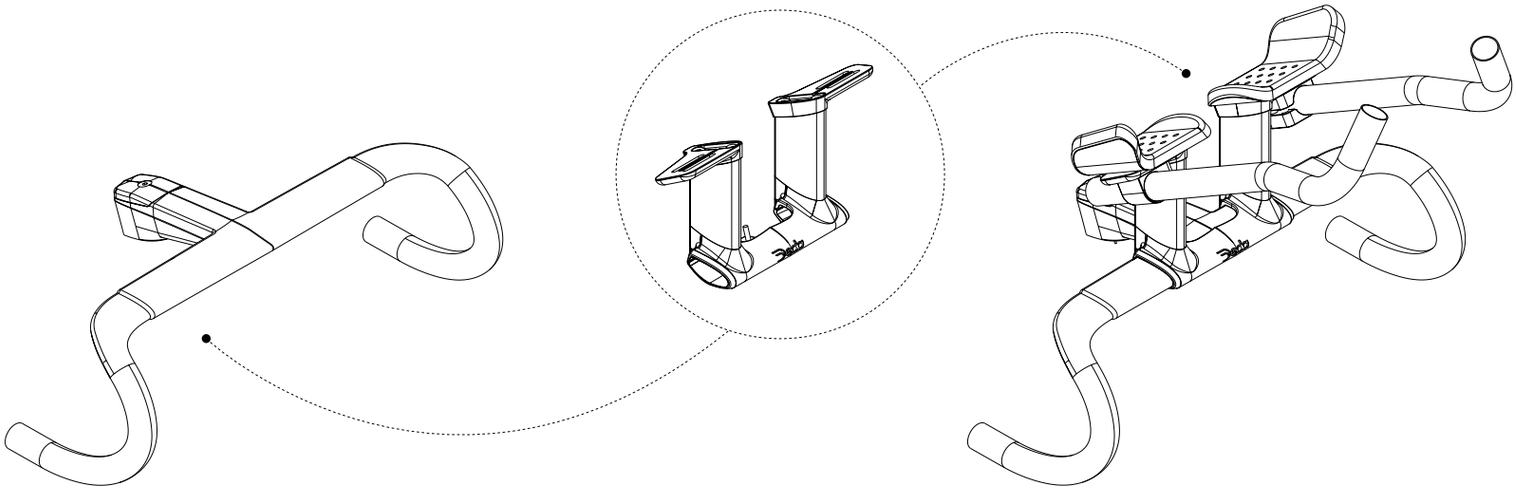

PATENTED **Made in Italy**

Road Gravel

IT • TT 314® è un adattatore clip-on progettato per adattarsi ai manubri integrati con sezione superiore aero. Il kit include una clip composita che consente di adattarsi alla forma aerodinamica del manubrio, mentre l'installazione di questo prodotto richiede solo 5 minuti. Il kit è dotato di un distanziale angolato da 60 mm/30°, ma sono disponibili come pezzi di ricambio tre opzioni di altezza (80, 100 e 120 mm) e quattro spessori angolati (10°, 15°, 20° e 25°) per una regolazione ad hoc. La compatibilità è con estensioni Deda come JET2 Evo e JET2 Hydro, mentre è disponibile un kit speciale per la compatibilità con Fast Pro e Parabolica Pro. Questo adattatore clip-on è la soluzione definitiva per specialisti della crono e triatleti.

EN • TT 314® is a clip-on adapter designed to specifically fit integrated handlebars with an aero top section. The kit includes a composite clip that allows to fit the aero shape of the handlebar and set-up takes only 5 minutes for installation. The kit comes with a 60 mm/30° angled spacer, but three height options (80, 100 and 120 mm) and four angled spacers (10°, 15°, 20° and 25°) for fine adjustment are available as spares. Deda extensions such as JET2 Evo, JET2 Hydro and a special kit for the Fast Pro and Parabolica Pro are available to complete the set, depending on the use and performance level required. The clip-on adapter is the ultimate solution for TT specialists and triathletes.

Compatibilità manubri:
Compatibile con Alanera RS e altri modelli sul mercato. La lista completa è disponibile sul sito dedaelementi.com alla rispettiva pagina prodotto.
Compatibilità estensioni:
• JET2 Evo, JET2 Hydro (direct mount)
• Fast Pro, Parabolica Pro, Fastblack2, Parabolica Uno/Due (attraverso uno speciale kit)
Materiali:
• clip: composito, stampato 3D
• spessori e piastre: alluminio 6061
Altezza spessori:
• 60 mm (incluso)
• 80 mm (disponibile separatamente)
• 100 mm (disponibile separatamente)
• 120 mm (disponibile separatamente)
Spessore angolato:
30°
Larghezza poggiagomiti:
95 mm
Regolazione poggiagomiti:
115 mm – 165 mm
Arretramento poggiagomiti:
± 20 mm
Accessori disponibili separatamente:
• clamp kit per estensioni Ø 24.0 mm (Fastblack 2, Parabolica Pro, Parabolica Uno/Due)
• Clamp kit per estensioni Ø 22.2 mm (Fast Pro)
Peso:
400 g

Handlebar Compatibility:
Compatible with Alanera RS and other models on the market. The updated list is available on dedaelementi.com at product page.
Extensions Compatibility:
• JET2 Evo, JET2 Hydro (direct mount)
• Fast Pro, Parabolica Pro, Fastblack2, Parabolica Uno/Due (requires a special kit)
Materials:
• clip: composite, 3D printed
• spacers and plates: aluminum 6061
Spacer height:
• 60 mm (included)
• 80 mm (available as option)
• 100 mm (available as option)
• 120 mm (available as option)
Spacer angle:
30°
Armrest width:
95 mm
Armrest adjustement:
115 mm – 165 mm
Armrest setback:
± 20 mm
Other parts not included:
• clamp kit for Ø 24.0 mm extensions (Fastblack 2, Parabolica Pro, Parabolica Uno/Due)
• clamp kit for Ø 22.2 mm extensions (Fast Pro)
Weight:
400 g

↓ Description	↓ Deda Part Code	↓ EAN13 Code
TT 314 clip-on adapter for Alanera RS Handlebar	TT314-ALARS	8055774369688
TT 314 clip-on adapter for Alanera DCR	TT314-ALADCR	8059493280880
TT 314 clip-on adapter for Canyon CP0030 Handlebar	TT314-CANY	8059493280477
TT 314 clip-on adapter for Canyon CP0018 handlebar	TT314-CANY1	8059493280620
TT 314 clip-on adapter for Giant Cadex Aero Handlebar	TT314-GIANT	8059493280460
TT 314 clip-on adapter for Pinarello Talon Ultra Light (Dogma X & Dogma F MY23)	TT314-PINA	8059493280910
TT 314 clip-on adapter for Ridley Cirrus Pro Handlebar	TT314-RIDL3	8055774369565
TT 314 clip-on adapter for Ridley Nimbus Aero Handlebar	TT314-RIDL1	8055774369541
TT 314 clip-on adapter for Ridley Nimbus Pro Handlebar	TT314-RIDL2	8055774369558
TT 314 clip-on adapter for Scott Creston IC SL Aero	TT314-SCOTT	8059493280637

TT 314® • Compatibilità con le estensioni Deda
TT 314® • Deda Extensions compatibility

IT • Per garantire un'installazione sicura e perfettamente integrata delle estensioni Deda sul tuo manubrio aerodinamico con il sistema clip-on TT 314®, è necessario un kit di montaggio specifico. JET2 Evo e JET2 Hydro sono progettate per un montaggio diretto, assicurando un'installazione semplice e immediata. Fast Pro, Parabolica Pro, Fastblack2, Parabolica Uno e Due richiedono un kit di montaggio dedicato per garantire un fissaggio preciso e stabile.

EN • To ensure a seamless and secure installation of Deda extensions on your aerobar with the TT 314® clip-on system, a specific mounting solution is required. JET2 Evo and JET2 Hydro extensions are designed for direct mounting, ensuring a straightforward and hassle-free installation. Fast Pro, Parabolica Pro, Fastblack2, Parabolica Uno and Due require a dedicated mounting kit to achieve a precise and stable fit.

JET2 Hydro

Kit JET2 Hydro per TT 314® — Codice → JET2-HYDRO-S o JET2-HYDRO-M
JET2 Hydro kit for TT 314® — Code → JET2-HYDRO-S or JET2-HYDRO-M

JET2 Evo

Kit JET2 Evo per TT 314® — Codice → JET2S-EVO o JET2M-EVO
JET2 Evo kit for TT 314® — Code → JET2S-EVO or JET2M-EVO

FAST PRO

Kit Fast Pro per TT 314® — Codice → FPRO-TT314
Fast Pro kit for TT 314® — Code → FPRO-TT314
FPRO-TT314-SH (Shimano Satellite) • FPRO-TT314-SR (Sram Blips)

PARABOLICA PRO

Kit Parabolica Pro per TT 314® — Codice → PPRO-TT314
Parabolica Pro kit for TT 314® — Code → PPRO-TT314

FASTBLACK2

Richiede un kit di morsetti specifico per TT 314® — Codice → CLAMP24
Requires a specific clamp kit for TT 314® — Code → CLAMP24

PARABOLICA UNO & DUE

Richiede un kit di morsetti specifico per TT 314® — Codice → CLAMP24
Requires a specific clamp kit for TT 314® — Code → CLAMP24

JET2 EVO

Road Gravel

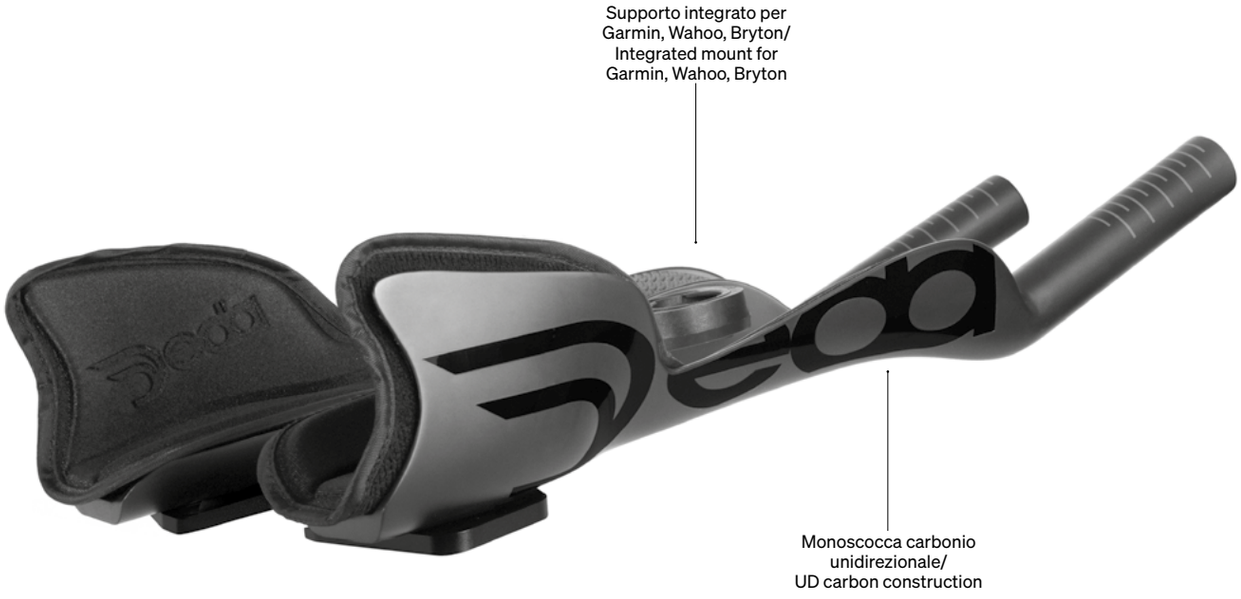

Nuova opzione Riser per Jet Computer Mount.
New Riser option for Jet Computer Mount.

IT • Le nuove JET2 Evo portano l'eccellenza aerodinamica a un livello superiore. Grazie alla nuova piastra per i poggiagomiti dal design ottimizzato, tagliano l'aria con precisione millimetrica, migliorando le prestazioni e regalando agli atleti una sensazione di pura velocità. JET2 Evo includono esclusivamente le eleganti prolunghe in carbonio, lasciandoti la possibilità di abbinarle al basebar e agli spessori originali della bici. La piastra regolabile consente una regolazione del setback di ± 15 mm, permettendo una messa a punto precisa della posizione aerodinamica. Realizzate in fibra di carbonio unidirezionale (UD), pesano solo 330 grammi. Disponibili in due lunghezze (small 340 mm e medium 370 mm), sono facilmente accorciabili fino a 60 mm per una configurazione su misura. L'interno delle prolunghe è pronto ad accogliere il passaggio cavi per gruppi elettronici, mentre i poggiagomiti ergonomici offrono comfort anche durante gli sforzi più lunghi e intensi. Il supporto computer integrato, compatibile con dispositivi Garmin®, Wahoo® e Bryton®, ti permette di avere sempre sotto controllo i tuoi dati. Con una finitura esclusiva POB (Polish on Black), JET2 Evo uniscono prestazioni di alto livello, leggerezza e massima versatilità. Durante il montaggio con i distanziali originali del basebar, è fondamentale verificare la conformità al regolamento UCI, in particolare per quanto riguarda l'altezza massima consentita.

EN • The new JET2 Evo take aerodynamic excellence to the next level. Thanks to the newly designed armrest plate with optimized aerodynamics, they slice through the air with pinpoint precision, enhancing performance and delivering a true sensation of speed. Engineered for athletes who demand a perfect position without sacrificing freedom of choice, JET2 Evo includes only the sleek carbon extensions, allowing you to pair them with your bike's original basebar and spacers. The adjustable mounting plate offers a ± 15 mm setback range relative to the handlebar axis, enabling precise fine-tuning of your aerodynamic setup. Crafted entirely from unidirectional (UD) carbon fiber, they weigh just 330 grams. Available in two lengths (small – 340 mm and medium – 370 mm), they can be shortened by up to 60 mm for a truly custom fit. The internal channeling is ready to accommodate electronic shifting cables, while the ergonomic arm pads provide support and comfort even during the longest and most demanding efforts. The integrated computer mount, compatible with Garmin®, Wahoo®, and Bryton® devices, keeps your data visible and accessible at all times. With an exclusive POB (Polish on Black) finish, JET2 Evo combines high-level performance, featherlight weight, and ultimate versatility. When installing with your basebar's original spacers, always ensure compliance with UCI regulations, particularly regarding the maximum height allowance.

IT • La nuova piastra presenta una forma aerodinamica e consente l'utilizzo di distanziali con un'inclinazione fino a 30°, offrendo una maggiore flessibilità nella regolazione della posizione del ciclista. È compatibile con un'ampia gamma di manubri da cronometro, grazie a un interasse delle viti compreso tra 17 e 41 mm.

EN • The new plate features an aerodynamic shape and allows spacers to be used at angles of up to 30°, providing greater flexibility in rider positioning. It is compatible with a wider range of TT handlebars, accommodating bolt spacings from 17 to 41 mm.

JET2 EVO PLATE

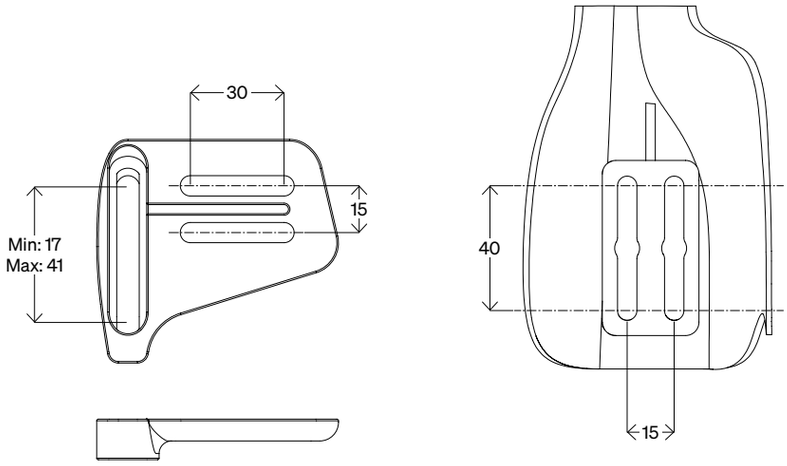

JET2 PLATE

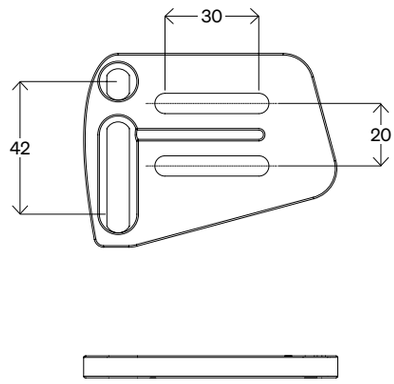

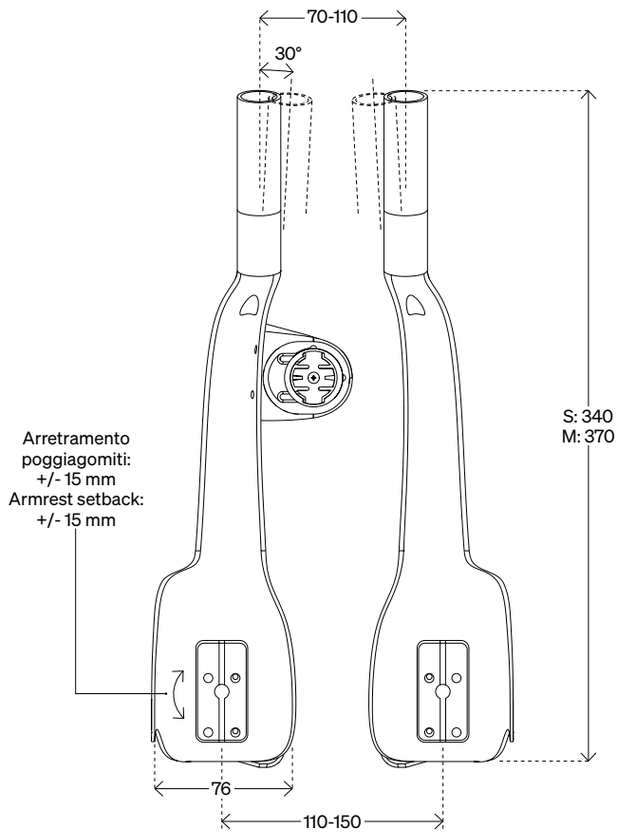

Materiale:
Monoscocca carbonio unidirezionale
Compatibilità:
Gruppi elettronici
Lunghezza:
• 340 mm (Misura → S)
• 370 mm (Misura → M)
Regolazione lunghezza:
Taglio a misura 280 mm (S) - 310 mm (M)
Accessori inclusi:
Supporto integrato per Garmin®, Wahoo®, Bryton®
Altezza estensioni:
In base agli spessori del manubrio da crono utilizzato
Angolo estensioni:
In base agli spessori del manubrio da crono utilizzato
Larghezza poggiagomiti:
76 mm, posizione regolabile in base al manubrio da crono utilizzato
Arretramento poggiagomiti:
± 15 mm
Peso:
330 g (Misura → S)

Material:
UD carbon construction
Compatibility:
Electronic groupsets
Length:
• 340 mm (Size → S)
• 370 mm (Size → M)
Length adjustments:
Cut to length 280 mm (S) - 310 mm (M)
Accessories included:
Integrated mount for for Garmin®, Wahoo®, Bryton®
Extensions height:
Check spacers delivered with the TT handlebar
Extensions angle:
Check spacers delivered with the TT handlebar
Armrest width:
76 mm, armrest width position can be adjusted based on the TT handlebar spec.
Setback:
± 15 mm
Weight:
330 g (Size → S)

↓ Description	↓ Deda Part Code	↓ EAN13 Code
JET2 EVO, Extensions, Carbon, Size S, 340 mm, without spacers & bridge	JET2S-EVO	8055774369572
JET2 EVO, Extensions, Carbon, Size M, 370 mm, without spacers & bridge	JET2M-EVO	8055774369589

JET Riser Computer Mount
JET Riser Computer Mount

Adattatore per Sram Blip
Adapter for Sram Blip

IT • Nuova opzione Riser (+ 42 mm) del Jet Computer Mount. Questo nuovo supporto computer Jet è progettato specificamente per i ciclisti che posizionano le prolunghe in configurazione super stretta. Questa versione di supporto computer garantisce una migliore visibilità e un'integrazione aerodinamica, offrendo un cockpit pulito senza compromessi.

Materiale:
Stampato in 3D, nylon
Inserti sostituibili:
• Garmin® o Wahoo®
• Bryton®
Peso:
40 g
Compatibilità:
• Garmin® (1000, 800 & 500 series)
• Wahoo® (Elemnt Bolt, Roam & Ace)
• Bryton®
Note:
Compatibile solo con estensioni JET carbon.

EN • New Riser option (+ 42 mm) of Jet Computer Mount. Introducing the latest riser accessory for the Jet computer mount, engineered specifically for riders who position their extensions in a super narrow configuration. This new computer mount version ensures improved visibility, and aerodynamic integration, giving you a clean cockpit without compromise.

Material:
3D printed, nylon
Replaceable inserts:
• Garmin® or Wahoo®
• Bryton®
Weight:
40 g
Compatbility:
• Garmin® (1000, 800 & 500 series)
• Wahoo® (Elemnt Bolt, Roam & Ace)
• Bryton®
Notes:
Compatible with JET carbon extensions only.

IT • Il nuovo adattatore per i comandi remoti SRAM Blip è compatibile con i modelli di estensioni Jet, Fastblack e Parabolica.

Materiale:
Nylon
Peso:
10 g (1 set)
Compatibilità:
• JET
• Fastblack
• Parabolica

EN • New Sram blip remote shifters adapter is compatible with Jet, Fastblack and Parabolica extensions models.

Material:
Nylon
Weight:
10 g (1 set)
Compatbility:
• JET
• Fastblack
• Parabolica

↓ Description	↓ Deda Part Code	↓ EAN13 Code
JET Riser computer mount, nylon, for Garmin®, Wahoo®, Bryton®	JETMOUNT-RISER	8059493280163

↓ Description	↓ Deda Part Code	↓ EAN13 Code
Extension adapter for Sram Blip shifter (1 set = 2 pcs)	TT-PLUG	8059493280293

REMA 1000
REITAN
RETAIL
Deda
RIDLEY
DT SWISS
Uno
Grip Grab

JET2 HYDRO

Made in Italy

Road Gravel

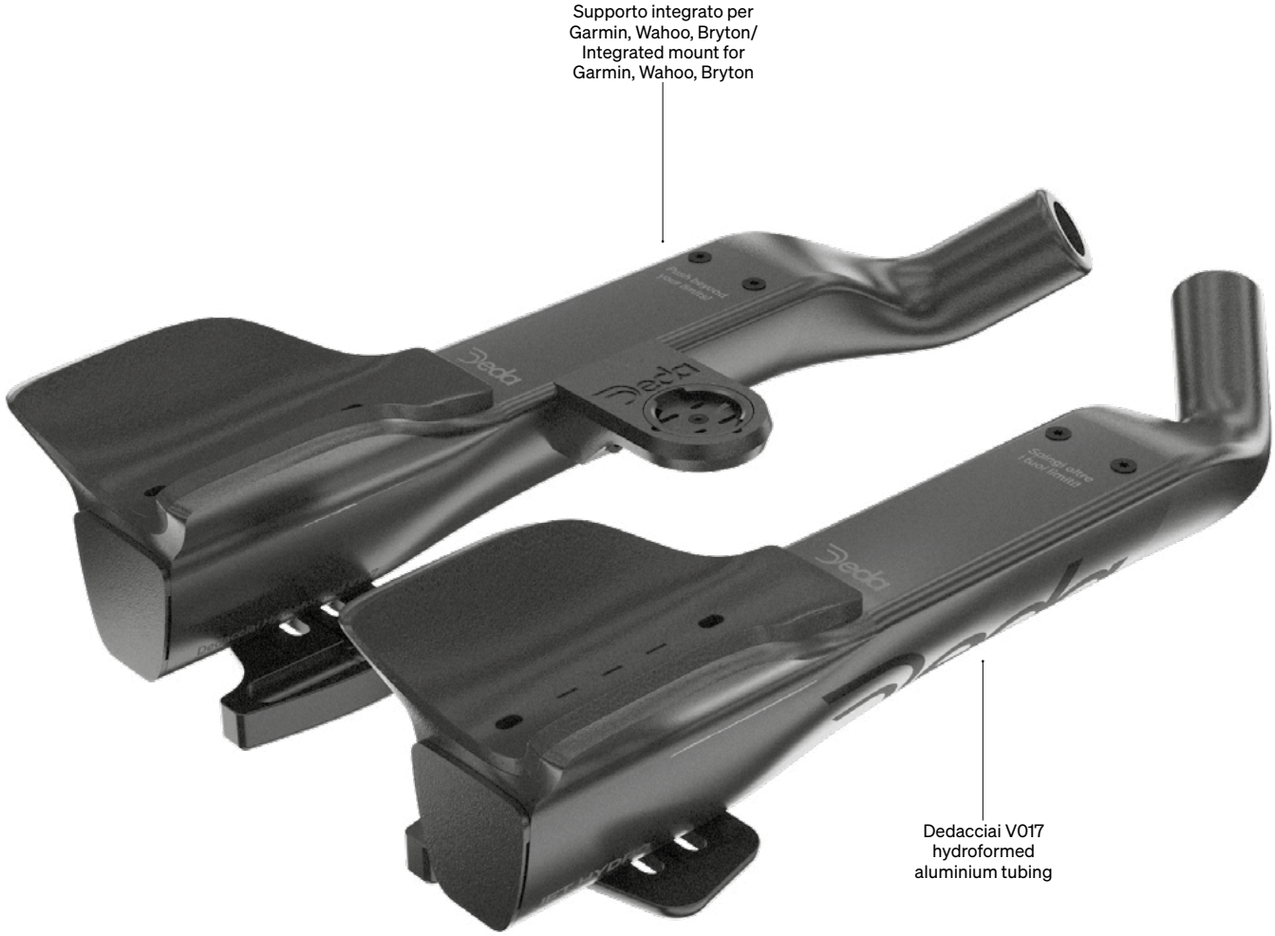

IT • Le estensioni JET2 Hydro sono pensate per gli atleti che cercano efficienza, integrazione e aerodinamica ottimizzata nelle prove a cronometro e nelle gare di triathlon su lunga distanza. Sviluppate in Italia con l'esclusivo alluminio Dedacciai V107 e la tecnologia di idroformatura, queste estensioni offrono una soluzione avanzata, costruita attorno alle prestazioni. JET2 Hydro è compatibile esclusivamente con gruppi elettronici. I poggiagomiti integrati e i pad in EVA sono progettati per offrire comfort e stabilità anche sulle distanze più lunghe, mentre il supporto computer integrato permette di tenere sotto controllo i dati senza compromettere la posizione aerodinamica. Disponibile in due misure, 315 mm (Small) e 345 mm (Medium), JET2 Hydro si adatta perfettamente alle base bar da cronometro con interasse dei fori compreso tra 17 e 41 mm. Linee pulite, integrazione totale e ingegneria orientata alla gara: JET2 Hydro è pensato per chi corre contro il tempo e pretende il massimo dal proprio equipaggiamento.

EN • JET2 Hydro extensions are designed for athletes who demand efficiency, integration, and aerodynamic excellence in time trials and long-distance triathlons. Developed in Italy using Dedacciai's exclusive V107 alloy and hydroforming technology, these extensions offer a streamlined solution built around performance. The JET2 Hydro is fully compatible with electronic groupsets, reflecting the demands of today's high-performance setups. Its integrated armrests and EVA pads are designed for long-haul comfort and control, while the built-in computer mount keeps your data in clear view without compromising your position. Sized for precision, with options at 315 mm (Small) and 345 mm (Medium), the JET2 Hydro fits seamlessly with TT base bars featuring bolt spacing between 17 and 41 mm. Clean lines, modern integration, and race-focused engineering, the JET2 Hydro is built for those who ride against the clock, and expect their equipment to keep up. order.

SRAM BLIPS

SHIMANO SATELLITE

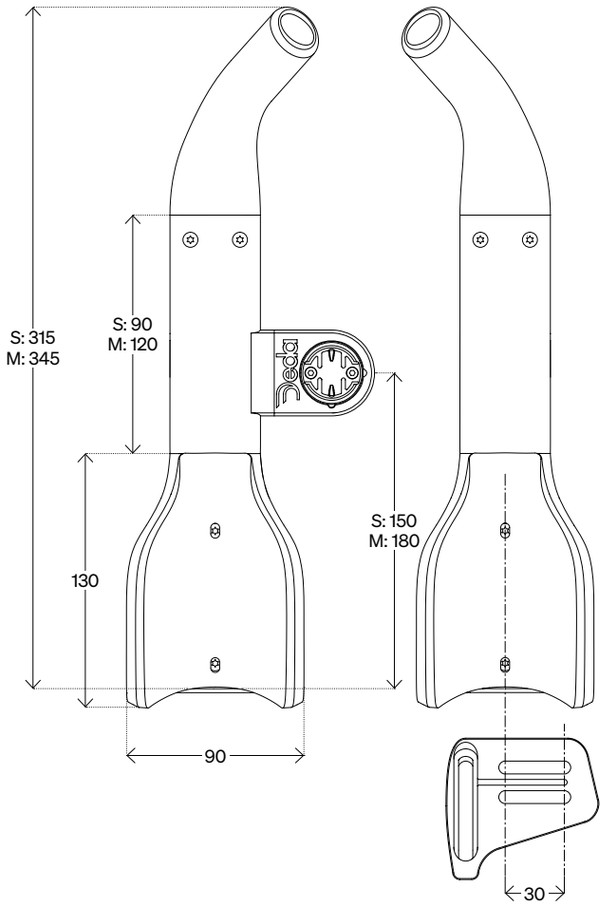

Materiale:
• Estensioni: tubazioni in alluminio idroformato Dedacciai V107
• Poggiagomiti e impugnature: stampa 3D
Lunghezza estensioni:
315 mm (taglia S) - 345 mm (taglia M)
Altezza estensioni:
Definita dagli spessori forniti con il manubrio TT
Angolo estensioni:
Definito dagli spessori forniti con il manubrio TT
Dimensioni poggiagomiti:
larghezza 90 mm / lunghezza 120 mm
Regolazione poggiagomiti:
Posizione fissa
Compatibilità gruppi:
Elettronici
Opzioni impugnature:
• Impugnature standard compatibili con comandi remoti:
→ Shimano SW-R9160
→ Sram eTap Clic (ES-EAC-CLIC-A1)
→ Campagnolo EPS V4 TT
• Impugnature compatibili con comandi remoti Sram Blips (EC-BLIP-B1)
• Impugnature compatibili con comandi remoti Shimano Satellite (SW-R9150)
Accessori inclusi:
• Supporto computer integrato compatibile con Garmin, Wahoo, Bryton
• Pad poggiagomiti
Compatibilità base bar:
Adatto a manubri TT con interasse fori da 17 a 41 mm
Peso:
720 g
Made in Italy

Material:
• Extensions: Dedacciai V107 hydroformed aluminium tubing
• Armrest and grips: 3D printed
Length:
315 mm (size S) - 345 mm (size M)
Extensions height:
Based on spacers delivered with the TT handlebar
Extensions angle:
Based on spacers delivered with the TT handlebar
Armrest:
90 mm width /120 mm length
Armrest adjustments:
Fixed position
Groupset Compatibility:
Electronic
Grips options:
• Standard grips compatible with remote shifters:
→ Shimano SW-R9160
→ Sram ES-EAC-CLIC-A1
→ Campagnolo EPS V4 TT
• Grips for remote shifters Sram Blips (EC-BLIP-B1)
• Grips for remote shifters Shimano Satellite (SW-R9150)
Accessories included:
• Integrated computer mount for Garmin, Wahoo, Bryton
• Armrest pads
Base bar requirements:
Fits TT base bars with bolt distance 17 ~ 41 mm
Weight:
720g
Made in Italy

↓ Description	↓ Deda Part Code	↓ EAN13 Code
JET2 Hydro extensions, Dedacciai V107 aluminium, Small, 315 mm	JET2-HYDRO-S	8055774368827
JET2 Hydro extensions, Dedacciai V107 aluminium, Medium, 345 mm	JET2-HYDRO-M	8055774368834
JET2 Hydro extensions, Dedacciai V107 aluminium, Small 315 mm, Sram blips	JET2-HYDRO-S-SR	8059493280125
JET2 Hydro extensions, Dedacciai V107 aluminium, Medium 345 mm, Sram blips	JET2-HYDRO-M-SR	8059493280149
JET2 Hydro extensions, Dedacciai V107 aluminium, Small 315 mm, Shimano satellite	JET2-HYDRO-S-SH	8059493280132
JET2 Hydro extensions, Dedacciai V107 aluminium, Medium 345 mm, Shimano satellite	JET2-HYDRO-M-SH	8059493280156

JET2 → JET1, Conversion kit

JET2 → JET1, Conversion kit

IT • Il kit di conversione da JET2 a JET1 è progettato per l'uso con manubri standard da 31,7 mm. Il kit include spessori con altezza 60 mm e angolo di 30 gradi, permettendo ai ciclisti di ottenere una posizione di guida confortevole e rialzata. Spessori con altezze da 80, 100 e 120 mm sono disponibili come accessori a parte. Compatibile con estensioni JET2 Evo e JET2 Hydro.

EN • The JET2 to JET1 conversion kit is designed for use with standard 31.7 mm handlebars. The kit includes shims with a height of 60 mm and an angle of 30 degrees, allowing riders to achieve a comfortable, raised riding position. Shims with heights of 80, 100 and 120 mm are available as separate accessories. Compatible with JET2 Evo and JET2 Hydro extensions.

Materiale:
• Spessori e morsetti: alluminio 6061
• Viteria: acciaio
Angolo spessore:
30°
Altezza spessore:
60 mm
Peso:
250 g

Material:
• Spacers e Clamps: aluminium 6061
• Screws: steel
Spacer angle:
30°
Spacer height:
60 mm
Weight:
250 g

↓ Description	↓ Deda Part Code	↓ EAN13 Code
JET2 to JET1 conversion spacer kit, Aluminium 6061, 60 mm × 30°	JET1EVO-SPKIT	8055774368926

TT Spacer Kit

Angled Spacers

TT Spacer Kit

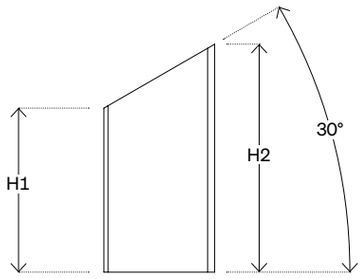

Version	H1	H2
TT-SPACER-060	60	91
TT-SPACER-080	80	111
TT-SPACER-100	100	131
TT-SPACER-120	120	151

IT • Il kit di distanziali per prolunghe Deda è realizzato in leggero alluminio estruso 6061 e offre quattro altezze – 60, 80, 100 e 120 mm – per una configurazione aerodinamica completamente personalizzabile. Con un inclinazione di 30° per una posizione ottimale dell'avambraccio e una maggiore efficienza aerodinamica, è compatibile con le prolunghe Deda Jet 2 Evo, Jet 2 Hydro, Fast Pro, Parabolica Pro e con il modello clip-on TT314. L'upgrade ideale per cronoman e triatleti alla ricerca del perfetto equilibrio tra posizione e velocità.

Materiale:
Alluminio estruso 6061
Angolo:
30°
Altezza:
• 60 mm
• 80 mm
• 100 mm
• 120 mm
Estensioni compatibili:
• JET2 Evo e JET2 Hydro
• Fast Pro
• Parabolica Pro
• TT314

EN • Deda extensions spacer kit is crafted from lightweight extruded 6061 aluminum and offers four stack heights - 60, 80, 100, and 120 mm - for a fully customizable aero cockpit. With a 30 degrees angle for an optimized forearm position and aerodynamic efficiency, it's compatible with Deda Jet 2 Evo, Jet 2 Hydro, Fast Pro, Parabolica Pro extensions and TT314 clip-on. The ideal upgrade for serious time trialists and triathletes seeking fit and speed in perfect balance.

Material:
Extruded in aluminium 6061
Spacer angle:
30°
Spacer height:
• 60 mm
• 80 mm
• 100 mm
• 120 mm
Extensions compatibility:
• JET2 Evo and JET2 Hydro
• Fast Pro
• Parabolica Pro
• TT314

Angled Spacers

IT • Il Kit consente di regolare l'inclinazione delle estensioni aggiungendo spessori angolati sopra gli spessori TT. Gli adattatori angolati sono disponbili con inclinazioni di 10°, 15°, 20° e 25° permettendo una personalizzazione precisa rispetto all'angolo originale di 30° degli spessori TT.

Materiale:
• Spessori: stampa 3D, nylon
• Viteria: acciaio
• Rondelle: alluminio
Angolo spessori:
• 10°
• 15°
• 20°
• 25°
Altezza spessori:
• 23 mm (10°)
• 18 mm (15°)
• 14 mm (20°)
• 9 mm (25°)
Compatibilità estensioni:
• JET 2 Evo e JET 2 Hydro
• Fast Pro
• Para Pro
• TT314

EN • The kit allows the inclination of the extensions to be adjusted by adding angled adapters on top of the TT spacers. Angled adapters are available in 10°, 15°, 20° and 25° angles, allowing precise customisation from the original 30° angle of the TT spacers.

Material:
• Spacers: 3D printed, nylon
• Screws: steel
• Washer: aluminum
Spacer angle:
• 10°
• 15°
• 20°
• 25°
Spacer height:
• 23 mm (10°)
• 18 mm (15°)
• 14 mm (20°)
• 9 mm (25°)
Extensions compatibility:
• JET 2 Evo and JET 2 Hydro
• Fast Pro
• Para Pro
• TT314

↓ Description	↓ Deda Part Code	↓ EAN13 Code
TT mono spacer 60mm/30° (1 set = 2 pcs), aluminum, black anodized	TT-SPACER-060	8055774369015
TT mono spacer 80mm/30° (1 set = 2 pcs), aluminum, black anodized	TT-SPACER-080	8055774369022
TT mono spacer 100mm/30° (1 set = 2 pcs), aluminum, black anodized	TT-SPACER-100	8055774369039
TT mono spacer 120mm/30° (1 set = 2 pcs), aluminum, black anodized	TT-SPACER-120	8055774369053

↓ Description	↓ Deda Part Code	↓ EAN13 Code
Angled Spacer Kit 10°, Nylon, 3d printed, 23 mm, 30° to 10° adapter (1 set)	TT-SP-10°-KIT	8055774369442
Angled Spacer Kit 15°, Nylon, 3d printed, 18 mm, 30° to 15° adapter (1 set)	TT-SP-15°-KIT	8055774369466
Angled Spacer Kit 20°, Nylon, 3d printed, 14 mm, 30° to 20° adapter (1 set)	TT-SP-20°-KIT	8055774369459
Angled Spacer Kit 25°, Nylon, 3d printed, 9 mm, 30° to 25° adapter (1 set)	TT-SP-25°-KIT	8055774369435

FAST PRO

Road Gravel

IT • Fast Pro sono le nuove estensioni in carbonio progettate specificamente per le gare a cronometro, triathlon o ultracycling. Lunghezza delle estensioni e larghezza dei poggiagomiti sono completamente regolabili. Impugnature intercambiabili sono disponibili per vari tipi di comandi cambio. Spessori di varie altezze sono disponibili come accessori. Compatibilità manubri Deda: Alanera RS (attraverso il TT 314 clip-on), Superzero RS (carbonio e alluminio), Superzero Gravel (carbonio e alluminio), Gera (carbonio e alluminio), Zero100, Zero2 DCR, Zero2, Zero1.

EN • Fast Pro are the new carbon extensions designed specifically for time trial, triathlon or ultra cycling races. Fully adjustable extension length and elbow rest width. Interchangeable grips are available for main shifters systems. Spacers of various heights are available as accessories. Deda handlebars compatibility: Alanera RS (through TT 314 clip-on), Superzero RS (carbon & alloy), Superzero Gravel (carbon & alloy), Gera (carbon & alloy), Zero100, Zero2 DCR, Zero2, Zero1.

Compatibilità gruppi:
Elettronici
Ø manubrio:
31,7 mm
Opzioni impugnature:
• Impugnature standard compatibili con comandi remoti:
→ Shimano SW-R9160
→ Sram eTap Clic (ES-EAC-CLIC-A1)
→ Campagnolo EPS V4 TT
• Impugnature compatibili con comandi remoti Sram Blips (EC-BLIP-B1)
• Impugnature compatibili con comandi remoti Shimano Satellite (SW-R9150)
Accessori inclusi:
Computer mount integrato e spugne poggiagomiti.

Groupset Compatibility:
Electronic
Ø Handlebar:
31,7 mm
Grips options:
• Standard grips compatible with remote shifters:
→ Shimano SW-R9160
→ Sram ES-EAC-CLIC-A1
→ Campagnolo EPS V4 TT
• Grips for remote shifters Sram Blips (EC-BLIP-B1)
• Grips for remote shifters Shimano Satellite (SW-R9150)
Accessories included:
Integrated computer mount and armrest pads.

SRAM BLIPS

SHIMANO SATELLITE

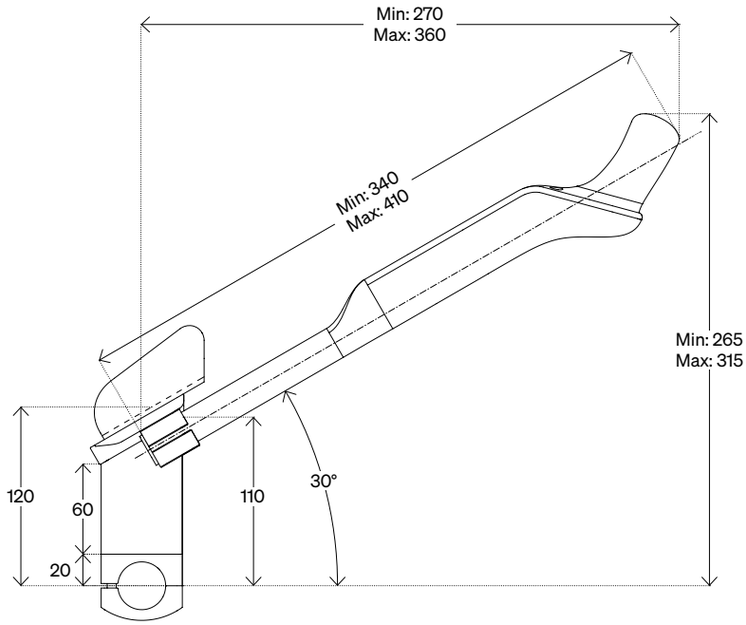

Morsetto
Clamp

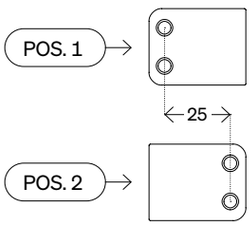

POS. 1	A →	60 mm
	B →	75 mm
	C →	90 mm
POS. 2	A →	85 mm
	B →	100 mm
	C →	115 mm

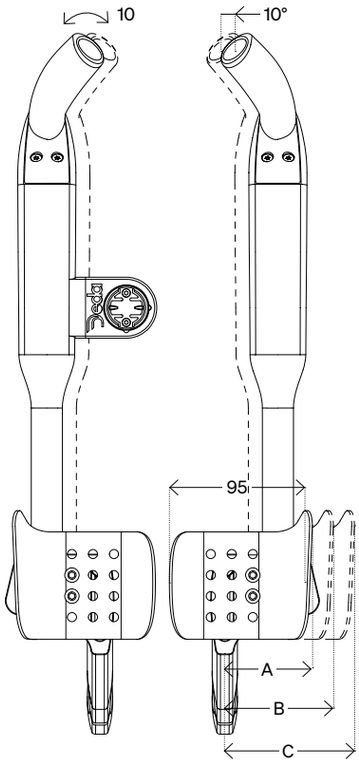

Materiale:
• Estensioni: carbonio UD
• Spessori e poggiagomiti: alluminio 6061
• Grips: stampati 3D
Diametro estensioni:
22.2 mm
Lunghezza:
410 mm
Regolazione lunghezza:
Min 340 mm – Max 410 mm
Altezza estensioni:
Min 265 - Max 315 mm
Angolo estensioni:
30°
Larghezza poggiagomiti:
95 mm
Regolazione poggiagomiti:
60 mm – 115 mm
Arretramento poggiagomiti:
± 20 mm
Altezza spessori:
• 60 mm (incluso)
• 80 mm (disponibile separatamente)
• 100 mm (disponibile separatamente)
• 120 mm (disponibile separatamente)
Angolo spessore:
30°
Peso:
920 g

Material:
• Extensions: full carbon UD construction
• Spacers and armrest: 6061 aluminium
• Grips: 3D printed
Extensions diameter:
22.2 mm
Length:
410 mm
Length adjustments:
Min 340 mm – Max 410 mm
Extensions height:
Min 265 - Max 315 mm
Extensions angle:
30°
Armrest width:
95 mm
Armrest adjustement:
60 mm – 115 mm
Armrest setback:
± 20 mm
Spacer height:
• 60 mm (included)
• 80 mm (available as option)
• 100 mm (available as option)
• 120 mm (available as option)
Spacer angle:
30°
Weight:
920 g

↓ Description	↓ Deda Part Code	↓ EAN13 Code
FAST PRO Extensions Set, Carbon, Ø 31.7 mm handlebar, 410 mm length, 60 mm/30° spacer	FASTPRO	8055774361149
FAST PRO Extensions Set, Carbon, Ø 31.7 mm h-bar, 410 mm length, Shimano satellite	FASTPRO-SH	8059493280118
FAST PRO Extensions Set, Carbon, Ø 31.7 mm h-bar, 410 mm length, Sram blips	FASTPRO-SR	8059493280101

PARABOLICA PRO

Road Gravel

Paramountkit. Vedi pagina *Accessori crono*
Paramountkit. See page *Chrono accessories*

IT • Parabolica Pro sono le nuove estensioni in alluminio progettate specificamente per le gare a cronometro, triathlon o ultracycling. Lunghezza delle estensioni e larghezza dei poggiagomiti completamente regolabili. Distanziali di varie altezze disponibili come accessori. Compatibilità manubri Deda: Alanera RS (attraverso il TT 314 clip-on), Superzero RS (carbonio e alluminio), Superzero Gravel (carbonio e alluminio), Gera (carbonio e alluminio), Zero100, Zero2 DCR, Zero2, Zero1.

EN • Parabolica Pro are the new aluminum extensions designed specifically for time trial, triathlon or ultra cycling races. Fully adjustable extension length and elbow rest width. Spacers of various heights available as accessories. Deda handlebars compatibility: Alanera RS (with TT 314 clip-on), Superzero RS (carbon and alloy), Superzero Gravel (carbon and alloy), Gera (carbon & alloy), Zero100, Zero2 DCR, Zero2, Zero1.

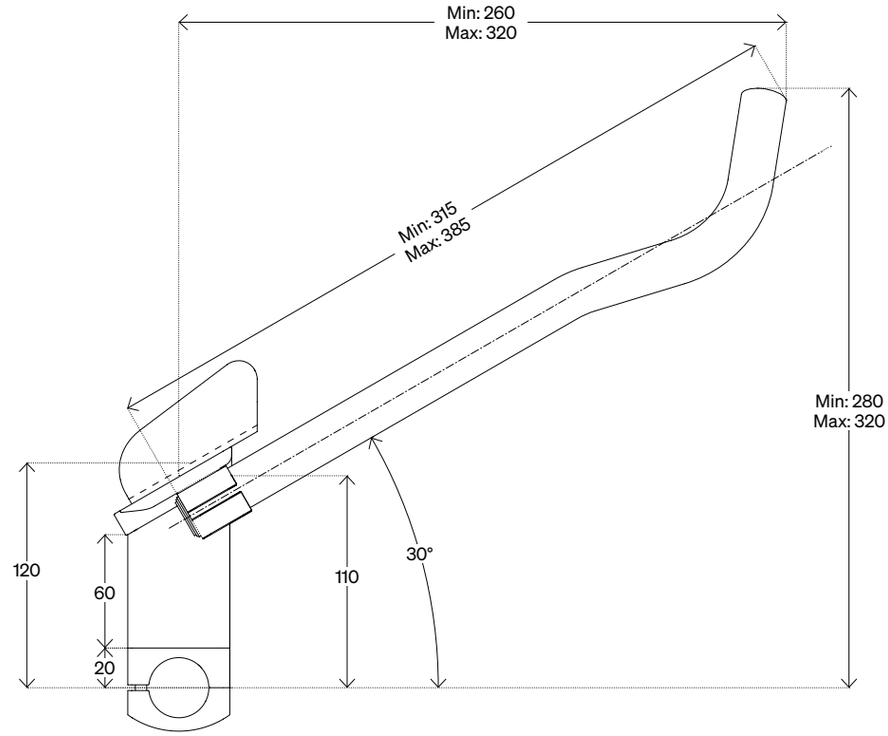

Morsetto
Clamp

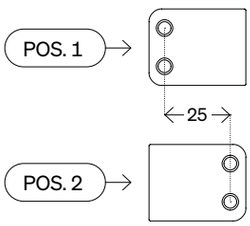

POS. 1	A →	60 mm
	B →	75 mm
	C →	90 mm
POS. 2	A →	85 mm
	B →	100 mm
	C →	115 mm

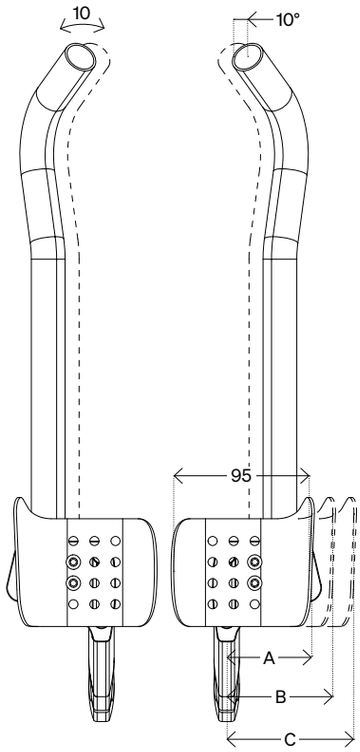

Materiale:
• Estensioni: alluminio 6061
• Spessori e poggiagomiti: alluminio 6061
Diametro estensioni:
24 mm
Lunghezza:
385 mm
Regolazione lunghezza:
315 mm Min - 385 mm Max
Altezza estensioni:
255 mm
Angolo estensioni:
30°
Larghezza poggiagomiti:
95 mm
Regolazione poggiagomiti:
115 mm – 165 mm
Arretramento poggiagomiti:
± 20 mm
Altezza spessori:
• 60 mm (incluso)
• 80 mm (disponibile separatamente)
• 100 mm (disponibile separatamente)
• 120 mm (disponibile separatamente)
Angolo spessore:
30°
Accessori inclusi:
Spugne poggiagomiti
Peso:
910g

Material:
• Extensions: 6061 aluminium
• Spacers and armrest: 6061 aluminium
Extensions diameter:
24 mm
Length:
385 mm
Length adjustments:
315 mm Min - 385 mm Max
Extensions height:
255 mm
Extensions angle:
30°
Armrest width:
95 mm
Armrest adjustement:
115 mm – 165 mm
Armrest setback:
± 20 mm
Spacer height:
• 60 mm (included)
• 80 mm (available as option)
• 100 mm (available as option)
• 120 mm (available as option)
Spacer angle:
30°
Accessories included:
Armrest pads
Weight:
910g

↓ Description	↓ Deda Part Code	↓ EAN13 Code
Parabolica Pro, Extensions, Aluminium 6061, Ø31.7 mm handlebar, 385 mm length	PARAPRO	8055774361200

CRONOEVO

UCI Approved

Road

Finitura BOB
BOB Finish

DCR System

Paramountkit. Vedi pagina *Accessori crono*
Paramountkit. See page *Chrono accessories*

Imbottiture poggiagomiti. (PAD31)
Armrest pad. (PAD31)

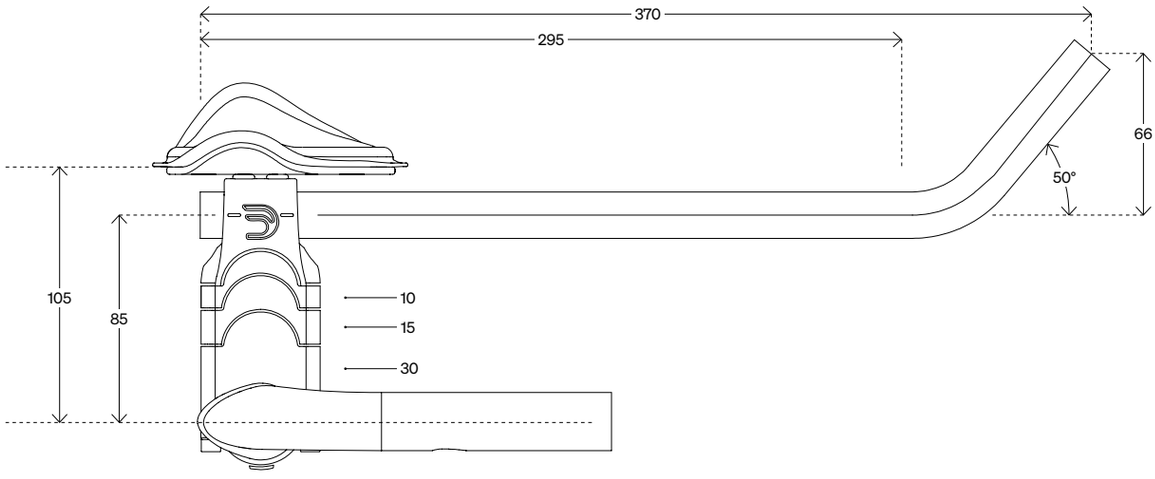

IT • Cronoevo è un aerobar progettato per ridurre al minimo la resistenza all'aria e ha caratteristiche aerodinamiche all'avanguardia. La forma piatta del manubrio garantisce presa sicura e una posizione di guida perfetta sia in partenza che in fase di curva. Realizzato in alluminio 6061 con una sezione superiore aerodinamica e dotato di prolunghe tipo J-Bend. Lo speciale kit distanziali permette di aumentare fino a 55mm l'altezza del poggiagomito per una posizione più comoda. Il sistema DCR (Deda Internal Cable Routing) permette la piena integrazione dei cavi dei freno all'interno della basebar, mentre le estensioni permettono il passaggio interno dei cavi (solo in caso di cavi coassiali).

EN • The Cronoevo aerobar has been designed with minimal drag and aero features at the forefront. The flat handlebar shape and angles all provide confidence and the perfect riding position whether you're just starting your ride or entering sharp corners. Made from 6061 aluminium series with an aero top section and equipped with alloy J-Bend extensions. The special spacers kit allows to increase up to 55mm the armrest height for a more comfortable position. The DCR (Deda Internal Cable Routing) system allows the full integration of the brake cables inside the basebar, while the extensions allow the internal cable routing (only for coaxial bar end cables).

↓ Manubrio

Forma:
Manubrio aero piatto
Materiale:
Alluminio 6061
Ø manubrio:
31,7 mm
Angolo ala /abbassamento:
0° / 0 mm
Profondità manubrio:
145 mm
Diametro impugnatura:
diametro interno Ø20 mm per fissaggio leve freno/cambio a expander
Profondità foro:
30 mm
Larghezza area centrale:
120 mm
Larghezza:
42 cm (esterno - esterno)
Note:
Compatibile con passaggio cavi interno (fino a 4 cavi). Approvato UCI

↓ Handlebar

Shape:
Aero flat bar
Material:
Alloy 6061
Diameter handlebar:
31,7 mm
Wing angle/drop:
0° / 0 mm
Reach of grip:
145mm
Grip diameter:
i.d. 20 mm for expander system brake & shifter lever
Brake bore depth:
30 mm
Clamp width:
120 mm
Width:
42 cm (outside to outside)
Note:
compatible with full internal cables routing (up to 4 cables). UCI Approved

↓ Prolunghe

Forma:
J-bend
Materiale:
alluminio 6061
Lunghezza estensioni:
370 mm, tagliabile a misura
Poggiagomiti:
Multi-regolabili completi di imbottiture

↓ Extensions

Extensions:
J-bend
Material:
Alloy 6061
Extension length:
370 mm, cut to length
Armrest:
Full adjustable with pads included

Peso totale (Manubrio + Prolunghe):
650 g
Finitura:
POB (Polish on black)

Total weight (Handlebar + Extensions):
650 g
Finish:
POB (Polish on black)

↓ Description	↓ Part Code	↓ EAN13 Code	↓ OEM Part Code	↓ EAN13 OEM Code
CRONOEVO, handlebar crono, aluminium 6061, 42 cm, extensions 370 mm × 50°	CRONOEVO	8052783483732	CRONOEVOX	8052783483749

TRIBAR

UCI Approved

Road

DCR System

IT • Tribar è il basebar in carbonio per le moderne bici da crono. Il design aerodinamico piatto delle ali riducono la resistenza al minimo offrendo una presa sicura in partenza o in curva. Il manubrio ha una zona centrale molto ampia di 130mm per il montaggio di qualsiasi attacco da 31.7mm e prolunghe di tipo clip-on bar. La costruzione interamente in carbonio UD garantisce resistenza e il miglior rapporto peso/rigidità. Progettato per la pura velocità. Compatibile con il sistema DCR (Deda Internal Cable Routing). Il manubrio TT perfetto per completare qualsiasi bici da triathlon o da cronometro.

EN • Tribar is the carbon base bar for modern aero bikes. The aero shape design and the 0 degree wing angle reduces drag to a minimum while offering a safe grip at the start or while cornering. A 130mm wide handlebar clamp area allows the mounting of any 31.7 TT stem and clip-on bar extensions. The full UD carbon construction guarantees strength and the best weight-to-stiffness ratio. Engineered for the pure speed. Compatible with DCR System (Deda Internal Cable Routing). The perfect TT handlebar to complement any triathlon or time trial bike.

Forma curva:
Manubrio aero piatto
Materiale/Finitura:
Fibra di carbonio unidirezionale
Larghezza Ala:
42 cm (esterno - esterno)
Angolo Ala/Abbassamento:
0° / 0 mm
Profondità impugnatura:
145 mm
Diametro impugnatura:
Interno 20 mm per fissaggio leve freno/cambio a expander
Profondità Foro:
30 mm
Ø Manubrio:
31,7 mm
Larghezza area centrale:
130 mm
Peso:
210 g
Note:
Passaggio cavi interno; compatibile con gruppi elettronici Campagnolo EPS / Shimano DI2. Approvato UCI.

Handlebar shape:
Manubrio aero piatto
Material/Finish:
Fibra di carbonio unidirezionale
Wing Width:
42 cm (esterno - esterno)
Wing Angle / drop:
0° / 0 mm
Reach of grip:
145 mm
Grip diameter:
Interno 20 mm per fissaggio leve freno/cambio a expander
Brake bore depth:
30 mm
Ø Handlebar:
31,7 mm
Clamp width:
130 mm
Weight:
210 g
Notes:
Full internal cable routing; compatible with Campagnolo EPS / Shimano DI2 cable routing. UCI approved.

↓ Description	↓ Deda Part Code	↓ EAN13 Code
TRIBAR, handlebar crono, carbon, 42 cm, Ø 31,7	TRIBAR	8059265682775

KOMETA
POLTI
KASK
Deda

CARBON BLAST

Road Gravel

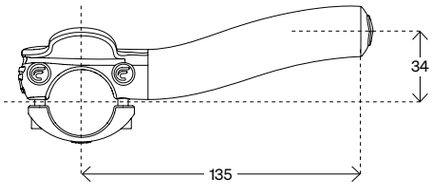

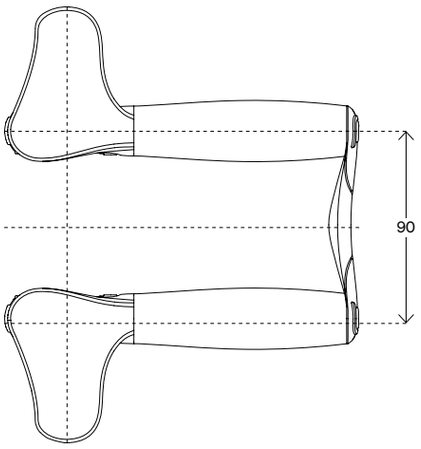

Imbottiture poggiagomiti.
Armrest pad.
(CBPADN)

IT • Le migliori prolunghe per il triathlon olimpico e le corse a cronometro con bici da corsa. Costruzione monoscocca in carbonio con appoggio dell'avanbraccio integrato all'impugnatura. Lunghezza fissa delle prolunghe di 135 mm per un peso ultraleggero di 226 g. Il ponticello di collegamento anteriore e comode imbottiture sono inclusi. Compatibile con il montaggio su manubri diametro 31,7 mm.

EN •The best aero bars for triathlon. You can easily transform your road bike in a refined time-machine. Carbon fiber monocoque construction with integrated extensions and armrest plate. Extensions have a fixed length of 135 mm for an ultralight weight of 226 g. Front link bridge and comfortable pads are included. Compatible with 31.7 mm diameter handlebar.

Materiale:
Fibra di carbonio UD
Lunghezza estensioni:
135 mm (da centro curva manubrio)
Interasse estensioni:
90 mm
Ø Manubrio:
31,7 mm
Poggiagomiti:
Integrati nelle estensioni completi di imbottiture
Peso:
226 g
Finitura:
Carbonio UD
Note:
Approvato UCI

Material:
UD Carbon fiber
Extensions Length:
135 mm (from handlebar center)
Extensions width:
90 mm
Ø Handlebar:
31,7 mm
Amrest:
Integrated with the extensions, special pads included
Weight:
226 g
Finish:
UD Carbon fiber
Notes:
UCI approved

↓ Description	↓ Deda Part Code	↓ EAN13 Code
CARBONBLAST, extensions, carbon, 13 5mm, rise 34 mm	CBLAST	8051406522544

SUPERZERO TT

Road Gravel

Finitura POB
POB Finish

Imbottiture poggiagomiti.
Armrest pad.
(CBPADN)

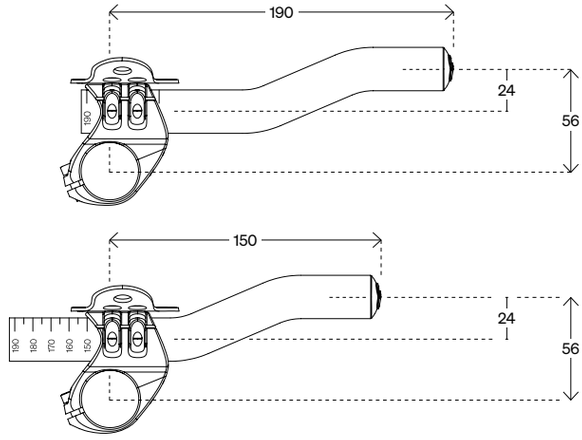

IT • Prolunghe dedicate per il manubrio Superzero. Superzero TT è dotato di prolunghe da 190 mm regolabili a misura. Le estensioni sono progettate specificamente per le gare di triathlon distanza olimpica e sprint. Poggiagomiti imbottiti realizzati in lycra all'esterno e schiuma all'interno per un grande comfort. Il morsetto di fissaggio al manubrio è forgiato in alluminio e è compatibile con qualsiasi manubrio da ø 31.7 mm. Ponticello in nylon incluso. Il complemento perfetto per qualsiasi bici da corsa e triathlon.

EN • The clip-on system for the Superzero handlebar. Superzero TT features 190 mm extensions, adjustable to length. The extensions are specifically designed for triathlon, olympic and sprint distance. Pads are made in Lycra (outside) and foam (inside) for great comfort. Alloy forged aero clamp compatible with any Ø 31.7 mm handlebar. Nylon bridge included. The perfect complement for any racing road bike.

Materiale:
Prolunghe in Alluminio 6061
Lunghezza prolunghe:
190 mm (da centro manubrio), minimo 150 mm
Larghezza prolunghe:
90 mm
Ø manubrio:
31,7 mm
Poggiagomiti:
Superleggeri in Alluminio 6061
Imbottiture:
Esterno in Lycra,
interno materiale espanso
Ponticello:
In nylon (16 g). Incluso
Peso:
330 g
Finitura:
POB (Polish on black)
Note:
Approvato UCI

Material:
Alloy 6061 extensions
Extensions Length:
190 mm (from handlebar center), minimum 150 mm
Extensions Width:
90 mm
Ø Handlebar:
31,7 mm
Amrest Plate:
Superlight 6061 Alloy series
Pads:
Lycra outside, foam inside
Bridge:
Nylon (16 g). Included
Weight:
330 g
Finish:
POB (Polish on black)
Notes:
UCI approved

↓ Description	↓ Deda Part Code	↓ EAN13 Code
SUPERZERO TT, extensions, aluminium 6061, 190 mm, rise 56 mm, Ø 24 mm	SZCLIPON	8052783482421

METAL BLAST

Road Gravel

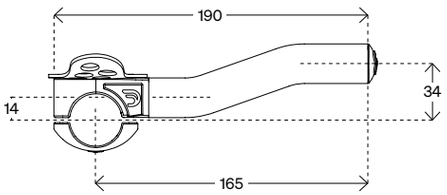

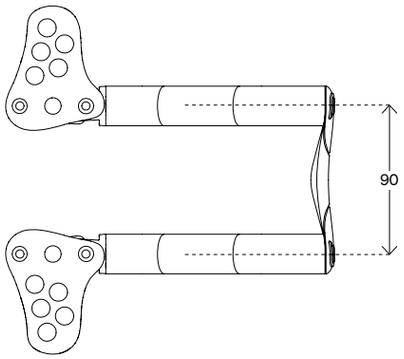

Imbottiture poggiagomiti.
Armrest pad.
(CBPADN)

IT • Metal Blast sono caratterizzati da prolunghe fisse da 165mm e da poggiagomiti ultralight per un peso totale di soli 266g. Le prolunghe sono leggermente rialzate e specificatamente disegnate per il triathlon, sia distanza olimpica che sprint. Il ponticello di collegamento anteriore e comode imbottiture sono inclusi. Compatibile con il montaggio su manubri diametro 31,7 mm.

EN • Metal Blast features 165mm extensions length and ultralight armrest for a total weight of 266g only. The extensions are slightly riser and specifically designed for triathlon, Olympic and sprint distance. Front link bridge and comfortable pads are included. Compatible with 31.7 mm diameter handlebar.

Materiale:
Alluminio 6061
Lunghezza estensioni:
165 mm (da centro curva manubrio)
Interasse estensioni:
90 mm
Ø Manubrio:
31,7 mm
Poggiagomiti:
in alluminio 6061
Imbottiture:
Esterno Lycra, interno materiale espanso
Ponticello:
in nylon (16g); incluso
Peso:
266 g
Finitura:
POB (Polish on black)
Note:
Approvato UCI

Material:
Alloy 6061 extensions
Extensions length:
165 mm (from handlebar center)
Extensions width:
90 mm
Ø Handlebar:
31,7 mm
Amrest plate:
superlight in Alloy 6061
Pads:
Lycra outside, foam inside
Bridge:
nylon (16g); included
Weight:
266 g
Finish:
Polish ob Black (POB)
Note:
UCI approved

↓ Description	↓ Deda Part Code	↓ EAN13 Code
METAL BLAST, extensions, aluminium 6061, 165 mm, rise 34 mm, Ø 24 mm	MBLASTBN	8059265683864

PARABOLICA UNO

Road Gravel

IT • Parabolica Uno è la soluzione migliore e leggera per rendere una bicicletta da strada l'arma perfetta per le gare a cronometro e di triathlon. Il prodotto è composto da soli tre componenti chiave, le prolunghe J-bend realizzate in alluminio 6061, il morsetto forgiato in alluminio per fissarlo al manubrio e il poggiagomito con velcro autoadesivo. Uno speciale kit distanziali permette di aumentare fino a 55mm l'altezza del poggiagomito per una posizione più comoda e garantisce numerose possibilità di regolazione. La Parabolica Uno è disponibile per manubrio standard da 31,7 mm di diametro o anche da 35,0mm. Il kit distanziali è disponibile solo per la versione di manubrio da 31,7mm.

EN • Parabolica Uno is the best and light solution to make a road bicycle the perfect weapon for time trial and triathlon races. The product consists of three key components only, J-bend extensions that is made of 6061 aluminium, the forged alloy clamp to fix it to the handlebar and the armrest with self-adhesive velcro pad. A special spacers kit allows to increase up to 55mm the armrest height for a more comfortable position and several possibilities of adjustment. Parabolica Uno is available for 31.7 mm diameter handlebar as well as for 35.0 diameter. The spacer kit is available only for the 31,7mm handlebar version.

Forma:
Estensioni J-bend
Materiale:
Alluminio 6061
Lunghezza estensioni:
Max 300 mm
Angolo impugnatura:
38°
Rialzo:
62 mm
Ø Manubrio:
31,7 mm, 35,0 mm
Ø Prolunghe:
24 mm
Poggiagomiti:
Multi-regolabili completi di imbottiture
Peso:
350 g
Finitura:
Anodizzato nero
Note:
Approvato UCI

Shape:
J-bend extensions
Material:
Alloy 6061
Extensions length:
Max 300 mm
Grip angle:
38°
Rise:
62 mm
Ø Extensions:
24 mm
Ø Handlebar:
31,7 mm, 35,0 mm
Amrest:
Full adjustable with pads included
Weight:
350 g
Finish:
Black anodized
Note:
UCI approved

Paramountkit. Vedi pagina *Accessori crono.* Paramountkit. See page *Chrono accessories.*

Kit spessori incluso. Vedi pagina *Accessori crono*. Riser Spacers Kit included. See page *Chrono accessories*.

Imbottiture poggiagomiti. Armrest pad. (PAD31)

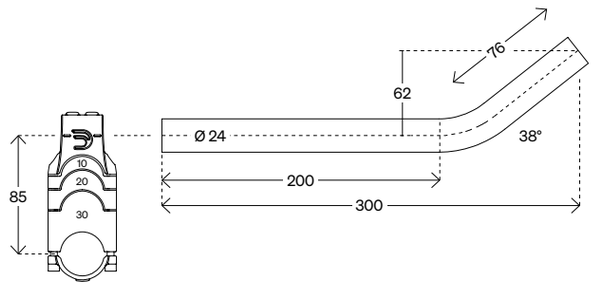

↓ Description	↓ Deda Part Code	↓ EAN13 Code
PARABOLICA 1, extensions, aluminium 6061, 300 mm × 38°, Ø 24 mm	PARA1K	8059265688579
PARABOLICA 1 (35), extensions, aluminium 6061, 300 mm × 38°, Ø 24 mm	PARA351N	8059265681792

PARABOLICA DUE

Road Gravel

IT • Parabolica Due è la prolunga adatta a chi ricerca una posizione aerodinamica e leggermente rialzata rispetto all'appoggio sul manubrio. Il prodotto è composto da soli tre componenti chiave, le prolunghe S-bend realizzate in alluminio 6061, il morsetto forgiato in alluminio per fissarlo al manubrio e il poggiagomito con velcro autoadesivo. Uno speciale kit distanziali permette di aumentare fino a 55 mm l'altezza del poggiagomito per una posizione più comoda e garantisce numerose possibilità di regolazione. La Parabolica Due è disponibile solo per manubrio da 31,7 mm di diametro.

EN • Parabolica Due is the clip-on for people looking at an aerodynamic position slightly riser compared to the armrest. The product consists of three key components only, S-bend extensions that is made of 6061 aluminium, the forged alloy clamp to fix it to the handlebar and the armrest with self-adhesive velcro pad. A special spacers kit allows to increase up to 55 mm the armrest height for a more comfortable position and several possibilities of adjustment. Parabolica Due is only available for 31.7 mm diameter handlebar.

Forma:
Estensioni S-bend
Materiale:
Alluminio 6061
Lunghezza estensioni:
Max 285 mm
Angolo impugnatura:
0°
Rialzo:
42 mm
Ø Manubrio:
31,7 mm
Ø Prolunghe:
24 mm
Poggiagomiti:
Multi-regolabili completi di imbottiture
Peso:
300 g
Finitura:
Anodizzato nero
Note:
Approvato UCI. Kit spessori incluso, vedi pagina *Accessori Crono*

Shape:
S-bend extensions
Material:
Alloy 6061
Extensions length:
Max 285 mm
Grip angle:
0°
Rise:
42 mm
Ø Handlebar:
31,7 mm
Ø Extensions:
24 mm
Amrest:
Full adjustable with pads included
Weight:
300 g
Finish:
Black anodized
Note:
UCI approved. Riser Spacers Kit included, see page *Chrono accessories*

Paramountkit. Vedi pagina *Accessori crono.* Paramountkit. See page *Chrono accessories.*

Kit spessori incluso. Vedi pagina *Accessori crono*. Riser Spacers Kit included. See page *Chrono accessories*.

Imbottiture poggiagomiti. Armrest pad. (PAD31)

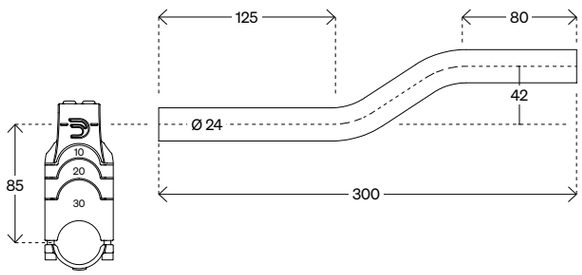

↓ Description	↓ Deda Part Code	↓ EAN13 Code
PARABOLICA 2, extensions, aluminium 6061, 285 mm, Ø 24 mm	PARA2K	8059265688586

ADJ

Road

Black
Finish

IT • Deda ADJ è un attacco manubrio regolabile che ti aiuta a impostare la giusta posizione sulla bici. L'attacco manubrio ADJ viene utilizzato anche dai meccanici professionisti dei Teams per aiutare i corridori a valutare la posizione di guida sulle bici da cronometro. L'attacco manubrio è quello strumento pratico che puoi installare sulla tua bici da testare su strada o in pista, e regolarlo direttamente sul campo. Ruota da più 30 gradi a meno 40 gradi. L'attacco manubrio è forgiato in alluminio 6061 e compatibile con manubrio da 31,7 mm di diametro. Disponibile nella misura 90 e 110 mm.

EN • Deda ADJ is an adjustable stem that helps you to set up the right position on the bike. ADJ stem is also used by professional Teams mechanics to help riders in valuing riding position on time trial bikes. The stem is that practical tool you can install on your bicycle and ride on the road or track, and fine-tune in the field. It pivots from plus 30 degrees to negative 40 degrees. The stem is forged out of 6061 aluminium and compatible with 31.7mm handlebar diameter. Available in size 90 and 110 mm.

Materiale:
Alluminio 6061
Viteria:
Acciaio
Angolo:
+ 30° / - 40°
Ø Manubrio:
31,7 mm
Canotto forcella:
1 1/8" (28,6 mm)
Altezza attacco:
40 mm
Misure:
90 - 110 mm
Peso:
260 g (110 mm)
Finitura:
Anodizzato nero

Material:
Alloy 6061
Screws:
Steel
Angle:
+ 30° / - 40°
Ø Handlebar:
31,7 mm
Fork Steerer:
1 1/8" (28,6 mm)
Clamp Height:
40 mm
Sizes:
90 - 110 mm
Weight:
260 g (110 mm)
Finish:
Black matt anodized

↓ Description	↓ Deda Part Code	↓ EAN13 Code
ADJ, stem, aluminium 6061, 90 mm, adjustable angle + 30° - 40°	ADJSTEMM	8051406523282
ADJ, stem, aluminium 6061, 110 mm, adjustable angle + 30° - 40°	ADJSTEML	8051406523275

Accessori Crono
Chrono Accessories

Imbottiture JET Hydro
JET Hydro pads

IT • Imbottiture sottili da 3 mm, progettate per estensioni Jet Hydro. Realizzate in Lycra resistente con schiuma morbida per comfort e maggiore presa. Peso: 26 g

EN • Slim 3 mm pads designed for Jet Hydro extensions. Made from durable Lycra with soft foam for comfort and grip. Weight: 26 g

Imbottiture Fast Pro & Parabolica Pro
Fast Pro & Parabolica Pro pads

IT • Realizzati in Lycra e schiuma per un comfort e una presa duraturi. La speciale texture migliora la presa e aiuta ad incanalare il sudore. Peso: 30 g

EN • Crafted from Lycra and foam for lasting comfort and grip. The special texture enhances grip and helps wick away sweat. Weight: 30 g

Imbottiture Fastblack e Parabolica
Fastblack & Parabolica Armrest pad

IT • Imbottiture poggiagomiti per prolunghe Fastblack 2 e Parabolica. Realizzati in Lycra (esterno) e schiuma (interno) per il massimo comfort. Utili scanalature centrali contro il sudore. Peso: 25 g

EN • Armrest pads for Fastblack2 and Parabolica extensions. Made in Lycra (outside) and foam (inside) for more comfort. Central grooves for the sweat. Weight: 25 g

Imbottiture Mini Clip-On
Mini Clip-on Armrest pad

IT • Imbottiture poggiagomiti per prolunghe CarbonBlast, Superzero TT e MetalBlast. Realizzati in Lycra (esterno) e schiuma (interno) per il massimo comfort. Utili scanalature centrali contro il sudore. Peso: 15 g

EN • Armrest pads for CarbonBlast, Superzero TT and MetalBlast extensions. Made in Lycra (outside) and foam (inside) for more comfort. Central grooves for the sweat. Weight: 15 g

Imbottiture JET Carbon
JET Carbon Armrest Pad

IT • Imbottiture poggiagomiti per prolunghe JET Carbon. Realizzati in Lycra (esterno) e schiuma (interno) per il massimo comfort. Scanalature centrali contro il sudore. Il set contiene le imbottiture e gli sticker in carbonio 3K. Peso: 30 g

EN • Armrest pads for JET Carbon. Made in Lycra (outside) and foam (inside) for more comfort. Central grooves for the sweat. The set contains pads and 3K carbon stickers. Weight: 30 g

↓ Description	↓ Deda Part Code	↓ EAN13 Code
JET Hydro pad kit, 3mm, foam, black, 1 set (2 pcs)	JH-PADKIT	8055774369312
Fast Pro & Parabolica Pro pad kit, foam, black, 1 set (2pcs)	TT-PADKIT	8055774369145
Pad kit for Carbon&Metal Blast, Superzero TT, 1 set = 2 pcs	CBPADN	8059265686285
JET armrest pad kit, black, includes 3K carbon sticker, 1 set = 2 pcs	JETPADKIT	8052783488829
Parabolica&Fastblack pad kit, 1 set = 2 pcs	PAD31	8051406526566

Riser Spacers Kit

Materiale/Material:
Nylon rinforzato carbonio
Nylon carbon reinforced
Diametro/Diameter: 31.7 mm
Altezza/Height: 10 mm up to 55 mm
Compatibile con:/Compatible with:
Parabolica and Fastblack2
Peso/Weight: 140 g
Finitura/Finish: Nero/Black

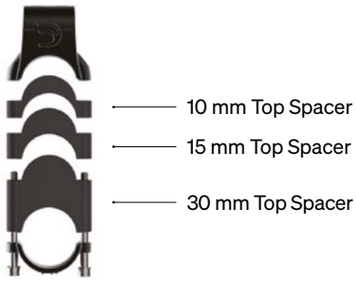

JET TWO Kit Spessori per Colnago TT1
JET TWO Kit for Colnago TT1

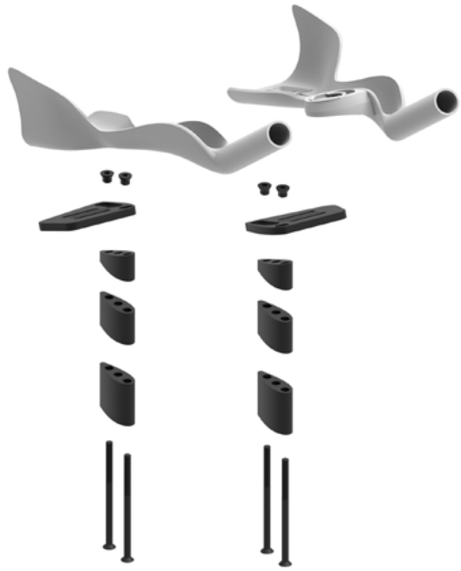

IT • Il kit spessori per serie Fastblack2 e Parabolica offre la possibilità di incrementare fino a 55mm l'altezza poggiagomiti per una posizione più confortevole. Realizzato in materiale composito (nylon rinforzato carbonio) include anche il set completo di viti per il montaggio. Disponibile solo per versione manubrio da 31.7 mm. Il peso complessivo del prodotto nella configurazione completa è di 140 g.

EN • The Riser Spacers Kit for Parabolica and Fastblack 2 series offers the possibilities to adjust the armrest height up to 55mm for a more comfortable position. Made in nylon (nylon carbon reinforced) the kit includes the full set of screws. The spacer kit is available only for the 31,7 mm handlebar version. The total weight related to the complete set is 140 g.

IT • Kit spessori JET2 per COLNAGO TT1. Include piastra in alluminio + spessori in nylon rinforzato con fibra carbonio.

EN • JET2 kit for COLNAGO TT1, alloy plate + nylon carbon reinforced spacers

Paramountkit
Paramountkit

Ponticello Brooklyn
Brooklyn Bridge (Brooklyn)

IT • Paramountkit è progettato per estensioni da Ø 24 mm come Parabolica Pro, Parabolica Uno, Parabolica Due e Cronoevo. Compatibile con i dispositivi Garmin®, Wahoo® e Bryton® grazie agli inserti inclusi.

IT • Ponticello per prolunghe Fastblack 2 e Parabolica. Realizzato in materiale termoplastico. Conforme al regolamento ITU. Peso: 70 g

EN • Paramountkit is designed for Ø 24 mm extensions like Parabolica Pro, Parabolica Uno, Parabolica Due, and Cronoevo. It fits Garmin®, Wahoo® and Bryton® computers with easy-swap inserts.

EN • Bridge for Fastblack 2 and Parabolica extensions.
Made in thermoplastic material. Meets ITU rules. Weight: 70 g

↓ Description	↓ Deda Part Code	↓ EAN13 Code
Parabolica&Fastblack spacers kit, nylon, spacer 10, 15, 30 mm, bolts for assembly	PARARISERKIT	8059265688548
PARAMOUNTKIT, mount kit for Ø 24 mm extensions, for Garmin, Wahoo & Bryton	PARAMOUNTKIT	8059493280583
Bridge for FastBlack&Parabolica, nylon	BROOKLYN	8051406522537
JET 2 kit COLNAGO TT1, aluminium plate + nylon carbon spacers, 40 + 30 + 20 mm (15°)	TT1KIT	8055774366267

PISTA

NEW **Omnium** → Manubrio/Handlebar **208**

Pista → Manubrio/Handlebar **210**

Dabar → Manubrio/Handlebar **211**

Crononero → Manubrio/Handlebar **212**

Crononero low rider → Manubrio/Handlebar **213**

OMNIUM

UCI Approved

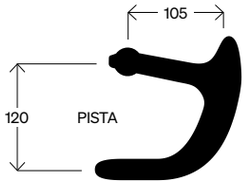

OMNIUM + RFID Technology

IT • Progettato per garantire prestazioni elevate, Omnium è la scelta ideale per i ciclisti su pista che cercano controllo, rigidità e un'efficienza aerodinamica superiore. Realizzato in carbonio, offre una struttura leggera ma estremamente rigida, ottimizzata per il massimo trasferimento di potenza in pista. Con un reach di 105 mm e un drop di 120 mm, questo manubrio assicura una posizione aggressiva e aerodinamica. Il flare di 10°, che aggiunge 3 cm alla larghezza complessiva, migliora il controllo durante le volate ad alta velocità in curva. La larghezza nella parte superiore è di 32 cm (misurata da esterno a esterno), che si amplia fino a 35 cm per una maggiore stabilità e maneggevolezza nella parte inferiore. Compatibile con attacchi manubrio da 31,7 mm, è rifinito nell'esclusiva versione Team ed è omologato UCI.

EN • Engineered for precision and performance, Omnium track handlebar is the ideal choice for competitive track cyclists who demand control, stiffness, and aerodynamic efficiency. Crafted from high-grade carbon, this handlebar offers a lightweight yet ultra-rigid platform optimized for maximum power transfer on the velodrome. Key performance features include a 105 mm reach and 120 mm drop, providing an aggressive and aerodynamic riding position. With a 10° flare that adds an additional 3 cm to the width, this bar enhances control during high-speed sprints and tight maneuvering. The top section measures 32 cm (outside-to-outside), expanding to a full width of 35 cm for superior stability and handling. Designed to fit a 31.7 mm clamp diameter, and finished in sleek Team design, this UCI-approved bar meets the highest standards of competition readiness.

Forma curva:
Pista
Materiale:
Carbonio
Ø manubrio:
31,7 mm
Reach:
105 mm
Drop:
120 mm
Apertura:
10° (+ 3.0 cm)
Larghezza:
32 cm (esterno – esterno)
Larghezza totale:
35 cm (esterno – esterno)
Peso:
365 g
Finitura:
Team
Nota:
Approvato UCI

Shape:
Track
Material:
Carbon
Ø Handlebar:
31,7 mm
Reach:
105 mm
Drop:
120 mm
Flare:
10° (+3.0 cm)
Width (top):
32 cm (outside – outside)
Full width:
35 cm (outside – outside)
Weight:
365 g
Finish:
Team
Note:
UCI approved

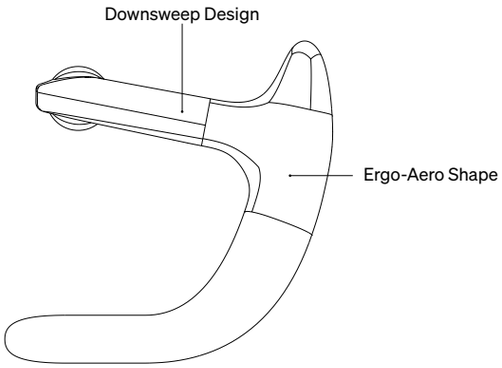

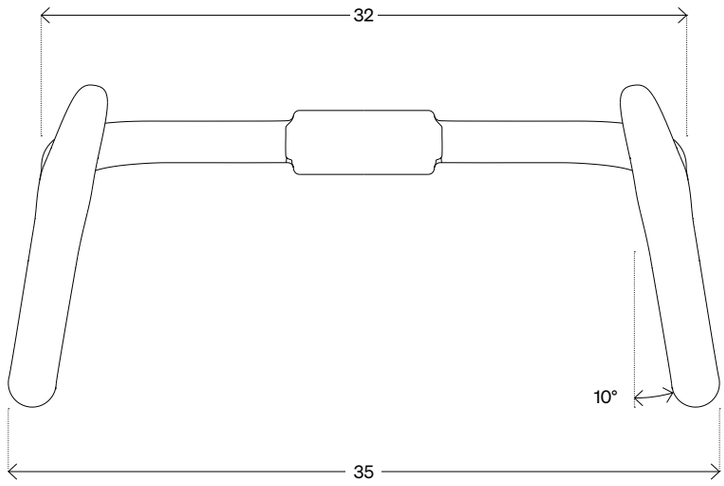

Suggerito con l'attacco Superbox • Per la migliore integrazione e prestazioni, si consiglia di abbinare il manubrio Omnium al nuovo attacco manubrio Superbox. Il Superbox è disponibile in un'ampia gamma di misure, inclusi i modelli più lunghi da 150 e 160 mm, rendendolo la scelta ideale per i ciclisti che necessitano di una posizione più estesa e aggressiva per massimizzare l'efficienza in pista. Questa combinazione garantisce un setup elegante e pronto per le gare, con eccellente controllo, rigidità e possibilità di regolazione, perfettamente adatto all'uso su pista.

Suggested with Superbox stem • For the best integration and performance, it is suggested to pair the Omnium handlebar with the Superbox stem. Superbox stem is available in a wide range of sizes, including longer sizes like 150 and 160 mm, making it an ideal choice for riders who require extended reach for an aggressive and efficient track position. This combination ensures a sleek, race-ready setup with excellent control, stiffness, and adjustability, perfectly suited for the velodrome.

↓ Description	↓ Part Code	↓ EAN13 Code
OMNIUM track, Handlebar, Carbon, Size 32 cm, 10° flare	OMNIUM	8055774369282

PISTA

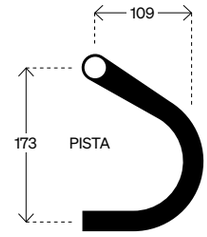

IT • Pista è il manubrio sprint per le corse in velodromo, un must del catalogo Deda. Si tratta di un manubrio superleggero in lega di serie 6061 a doppio spessore, adatto ai motociclisti professionisti più esigenti. Le barre hanno un diametro di 31,7 mm nella sezione del morsetto. La forma ampia presenta una reach di 109 mm e un drop di 173 mm. Disponibile nella misura 42 cm, misurata esterno-esterno, con un'esclusiva finitura lucida nera.

EN • The Pista is a sprint bar for track racing, a must of Deda catalogue. It is a superlight handlebar in 6061 alloy series and double butted, suitable for the most exigent professional riders. The bars have a 31.7 mm diameter at the clamp section. The sweeping shape features a 109 mm of reach and 173 mm of drop. Available in size 42 cm, measured outside-to-outside, with the premium black high-polish finish.

Forma Curva:
Pista
Materiale:
Alluminio 6061 a doppio spessore
Ø Manubrio:
31,7 mm
Profondità:
109 mm
Altezza:
173 mm
Misure:
42 cm (esterno - esterno)
Peso:
279 g
Finitura:
Anodizzato nero lucido

Shape:
Pista
Material:
Alloy 6061 double butted
Ø Handlebar:
31,7 mm
Reach:
109 mm
Drop:
173 mm
Sizes:
42 cm (outside - outside)
Weight:
279 g
Finish:
Black high polish

↓ Description	↓ Deda Part Code	↓ EAN13 Code
PISTA, handlebar, aluminium 6061, 42 cm, Ø 31.7, black high polish	PISTA42N	8059265686049

DABAR

Black
Finish

IT • Dabar è un manubrio aero in carbonio che funziona perfettamente su una bici a scatto fisso e da pista, o con prolunghe, in una bici da crono-triathlon. La sezione centrale da 31,7 mm si estende oltre l'area di bloccaggio dell'attacco fino al punto in cui il manubrio curva verso le estremità. Ciò rende il manubrio molto rigido e offre anche molto spazio per montare le prolunghe dove le desideri. Dabar è disponibile in una misura, 42 cm dall'esterno all'esterno. Il manubrio è cavo all'interno per il montaggio di leve freno/ cambio tipo a expander e ha fori di uscita per cavi freno meccanici/idraulici, nonché per i cavi del cambio elettronico. Se lo usi in pista, puoi installare i tappi inclusi per chiudere i fori. Il grande logo Deda rende questo prodotto uno dei più desiderabili.

EN • Dabar is carbon basebar that works perfectly on a fixed gear and track bike, or with extensions, in a time trial-triathlon bike. The oversized 31.7mm center section extends past the stem clamping area to the point at which the handlebar curves toward bar-ends. This makes the handlebar very stiff and it also gives plenty of room for mounting extensions where you want them. Dabar comes in one size, 42cm from outside-to-outside. The handlebar is hollow for mounting plug-style brake/shift levers, and have exit holes for mechanical-hydraulic brakes cables as well as for electronic shift wires. If you use it on the track, you can install the included plugs to close up the holes. The big Deda logo make this product one of the most desirable.

Forma Manubrio:
Manubrio Piatto
Materiale:
Fibra Di Carbonio Ud
Larghezza:
42 cm (esterno - esterno)
Angolo Ala/Abbassamento:
0° / 0 mm
Ø Manubrio:
31,7 mm
Peso:
210 g
Finitura:
Carbonio UD
Note:
Approvato UCI. Compatibile con gruppi elettronici Campagnolo EPS / Shimano DI2

Handlebar Shape:
Aero Flat Bar
Material:
UD Carbon Finer
Width:
42 cm (outside - outside)
Wing Angle/Drop:
0° / 0 mm
Ø Handlebar:
31,7 mm
Weight:
210 g
Finish:
UD Carbon Finer
Note:
UCI approved. Compatible with Campagnolo EPS / Shimano DI2 cable routing

↓ Description	↓ Deda Part Code	↓ EAN13 Code
DABAR, handlebar, carbon, 42 cm	DABAR42	8051406522407

CRONONERO

Anodizzato Nero Opaco
Black Matt Anodized

IT • Il manubrio Crononero è stato utilizzato da molti professionisti che lo hanno portato a innumerevoli vittorie nel corso degli anni. Più di recente questi tipi di manubri sono diventati più popolari per le bici scatto fisso pur mantenendo uno stile classico e tradizionale. Il manubrio è piatto e risulta rialzato di 44 mm alle estremità. Compatibile con prolunghe con diametro 31.7 mm. Disponibile nelle taglie 40 e 42 cm (esterno-esterno).

EN • The Crononero is classic basebar that many professional riders rode to countless victories over the years. Recently these handlebars have become more popular for fixed bikes while maintaining a classy & heritage style. The handlebar features a flat top design and a 44 mm riser hand position at the bar-ends. Fits all extensions using 31,7 mm clamp diameter. Available in size 40 and 42 cm (outside-to-outside).

Forma Manubrio:
Manubrio Crono Piatto
Materiale:
Alluminio 6061
Larghezza:
40 • 42 (esterno - esterno)
Impugnatura:
Rialzate 44mm
Ø Manubrio:
31,7 mm
Peso:
279 g
Finitura:
Anodizzato Nero Opaco
Note:
Approvato UCI

Handlebar Shape:
Flat Basebar
Material:
Alloy 6061
Width:
40 • 42 (outside - outside)
Grip:
44mm riser
Ø Handlebar:
31,7 mm
Weight:
279 g
Finish:
Black Matt Anodized
Note:
UCI approved

↓ Description	↓ Deda Part Code	↓ EAN13 Code
CRONONERO, handlebar crono, aluminium 6051, 40 cm	CRONONERO40	8051406522414
CRONONERO, handlebar crono, aluminium 6051, 42 cm	CRONONERO42	8051406522421

CRONONERO Low Rider

Anodizzato Nero Opaco
Black Matt Anodized

IT • Il manubrio Crononero Low Rider è all'altezza del manubrio che Greg LeMond usò per vincere il Tour de France nel 1989, una forma che molti professionisti hanno portato a innumerevoli vittorie nel corso degli anni. Più di recente questi tipi di manubri sono diventati più popolari per le bici scatto fisso pur mantenendo uno stile classico e tradizionale. Il manubrio presenta una posizione di rilancio ribassata di 60 mm rispetto al piano dell'attacco. Compatibile con prolunghe con diametro 31.7 mm. Disponibile nelle taglie 40 e 42 cm (esterno-esterno).

EN • The Crononero Low Rider shape hews to the bars that Greg LeMond used to win the Tour de France in 1989, a shape that many professional riders rode to countless victories over the years. Recently these handlebars have become more popular for fixed bikes while maintaining a classy & heritage style. The handlebar features a 60 mm lower hand position than the standard flat ride. Fits all extensions using 31,7 mm clamp diameter. Available in size 40 and 42 cm (outside-to-outside).

Forma Manubrio:
Manubrio Crono Ribassato
Materiale:
Alluminio 6061
Larghezza:
40 • 42 (esterno - esterno)
Abbassamento:
60 mm
Ø Manubrio:
31,7 mm
Peso:
279 g
Finitura:
Anodizzato Nero Opaco
Note:
Approvato UCI

Handlebar Shape:
Low Rider Aerobar
Material:
Alloy 6061
Width:
40 • 42 (outside - outside)
Wing Drop:
60 mm
Ø Handlebar:
31,7 mm
Weight:
279 g
Finish:
Black Matt Anodized
Note:
UCI approved

↓ Description	↓ Deda Part Code	↓ EAN13 Code
CRONONERO LOW RIDER, handlebar track/crono, aluminium 6061, 40 cm, 60 mm drop	CRONOLR40	8051406522490
CRONONERO LOW RIDER, handlebar track/crono, aluminium 6061, 42 cm, 60 mm drop	CRONOLR42	8051406522506

ICON

Speciale 26 → Manubrio/Handlebar **216**

Murex → Attacco/Stem **217**

RS01 → Reggisella/Seatpost **218**

Dritto 26 → Manubrio/Handlebar **219**

Piega → Manubrio/Handlebar **220**

Logo → Attacco/Stem **221**

POLI
LA
REMMA

SPECIALE 26

Finitura silver polish
Silver polish finish

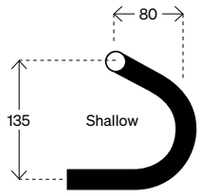

IT • Speciale 26 è un manubrio per i puristi. Speciale 26 ha la geometria del manubrio più classica nella storia del ciclismo, rotonda all'italiana. Se stai restaurando una bicicletta per L'Eroica, questo farà il suo lavoro magnificamente insieme all'attacco Murex. Fabbricato in alluminio 6061 e disponibile in tre larghezze 42, 44 e 46 cm, misurate da esterno a esterno, con finitura silver lucida.

EN • Speciale 26 is a handlebar for the traditionalists. Speciale 26 has the most classic handlebar geometry in the history of cycling, the Italian round. If you're restoring a bike for L'Eroica, this will do the job beautifully. Fabricated out of 6061 aluminum and available in three widths 42, 44, and 46 cm, measured outside-to-outside, with high polished finish.

Forma Curva:
Shallow (rotonda all'Italiana)
Materiale:
Alluminio 6061 a doppio spessore
Ø Manubrio:
26 mm
Profondità:
80 mm
Altezza:
135 mm
Misure:
42 • 44 • 46 cm (esterno - esterno)
Peso:
320 g (42 cm)
Finitura:
Silver Polish

Shape:
Shallow
Material:
Double butted Alloy 6061
Ø Handlebar:
26 mm
Reach:
80 mm
Drop:
135 mm
Sizes:
42 • 44 • 46 cm (outside - outside)
Weight:
320 g (42 cm)
Finish:
Silver Polish Finish

↓ Description	↓ Deda Part Code	↓ EAN13 Code
SPECIALE, handlebar, aluminium 6061, 42 cm, Ø 26, Shallow, silver polish	SPEC26HPS42	8059265681501
SPECIALE, handlebar, aluminium 6061, 44 cm, Ø 26, Shallow, silver polish	SPEC26HPS44	8059265681518
SPECIALE, handlebar, aluminium 6061, 46 cm, Ø 26, Shallow, silver polish	SPEC26HPS 46	8059265681525

MUREX

Finitura silver polish
Silver polish finish

IT • L'attacco Murex nasce da una lunga tradizione, rivista in chiave moderna. È un attacco per serie sterzo filettata da 1" con gambo da 22,2 mm (diametro 7/8') e morsetto per manubrio da 26 mm. Ha un angolo di 73°. Murex è disponibile in tre lunghezze, 80, 100 e 120 mm e con finitura silver lucida. Se stai restaurando una bicicletta per L'Eroica, questo farà il suo lavoro magnificamente insieme al manubrio Speciale26.

EN • Murex stem comes from a long tradition, revised with modern eyes. It is a quill stem (22.2 mm; 7/8' diameter) for 1" threaded headset, clamp for 26 mm handlebar. Features a 73-degree angle. Murex comes in three lengths, 80, 100, and 120mm and high polished finish. If you're restoring a bike for L'Eroica, this will do the job beautifully combined with Speciale26 handlebar.

Materiale:
Alluminio 6061 forgiato
Viteria:
Acciaio
Angolo:
73°
Ø Manubrio:
26 mm
Cannotto Forcella:
1" (25,4 mm)
Misure:
80 • 100 • 120 mm
Peso:
310 g
Finitura:
Silver Polish

Material:
Alloy 6061 forged
Screws:
Steel
Angle:
73°
Ø Handlebar:
26 mm
Fork Steerer:
1" (25,4 mm)
Sizes:
80 • 100 • 120 mm
Weight:
310 g
Finish:
Silver Polish Finish

↓ Description	↓ Deda Part Code	↓ EAN13 Code
MUREX, stem, aluminium 6061, 80 mm, 73°, for handlebar Ø 26 mm, for fork 1"	MURXHPS80	8059265681532
MUREX, stem, aluminium 6061, 100 mm, 73°, for handlebar Ø 26 mm, for fork 1"	MURXHPS100	8059265681549
MUREX, stem, aluminium 6061, 120 mm, 73°, for handlebar Ø 26 mm, for fork 1"	MURXHPS120	8059265681556

RS01

Finitura silver polish
Silver polish finish

IT • Il reggisella RS01 completa l'aspetto vintage della tua bici. È un reggisella silver lucido con un sistema di bloccaggio semplice e minimale. Il meccanismo di fissaggio è un classico sistema a due viti a cui si accede da sotto per una facile regolazione della sella. Disponibile in lunghezza 350 mm con diametro 27,2 mm e arretramento da 21mm.

EN • The RS01 seatpost completes the vintage looking of your bike. It's a high polished silver seatpost with a minimal simple clamping system. The fixing mechanism is a classic two-bolt system which you access from underneath for an easy saddle adjustment. Available in 350mm length, 27.2mm diameter and 21mm setback.

Materiale:
Alluminio 6061, forgiato 3D
Lunghezza:
350 mm
Diametro:
Ø 27,2 mm
Arretramento:
21 mm
Peso:
333 g
Finitura:
Silver Polish
Note:
Compatibile con adattatori Deda per batteria interna DI2

Material:
Alloy 6061 3D forged
Length:
350 mm
Diameter:
Ø 27,2 mm
Setback:
21 mm
Weight:
333 g
Finish:
Silver Polish Finish
Notes:
Compatible with Deda adapter for DI2 internal battery

↓ Description	↓ Deda Part Code	↓ EAN13 Code
RS01, seatpost, aluminium 6061, Ø 27.2, 350 mm, setback 21 mm, silver polish	RS01HPS27	8051406522827

DRITTO 26

IT • Dritto è un manubrio piatto robusto e affidabile per bici single speed e urban. Realizzato in alluminio 6061 con diametro 26mm. Disponibile con larghezza 50cm e finitura silver lucida.

EN • Dritto is a solid and reliable flat bar suitable for single speed and urban bikes. Made of 6061 aluminium with 26mm diameter. Availbale in 50cm width and silver polish finish.

Forma Curva:
Manubrio Diritto
Materiale:
Alluminio 6061
Ø Manubrio:
26,0 mm
Misure:
500 mm (esterno - esterno)
Peso:
190 g
Finitura:
Siver Lucido

Shape:
Flat Bar
Material:
Alloy 6061
Ø Handlebar:
26,0 mm
Sizes:
500 mm (outside - outside)
Weight:
190 g
Finish:
Silver Polish

↓ Description	↓ Deda Part Code	↓ EAN13 Code
DRITTO, handlebar, aluminium 6061, 50 cm, Ø 26, silver polish	DRITTO 26	8051406522353

PIEGA

Anodizzato nero
Black anodized

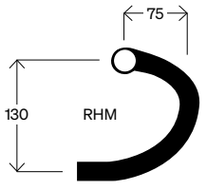

IT • Piega è il manubrio con moderna curva RHM con diametro da 26mm. Realizzato in alluminio 6061 a doppio spessore. Disponibile nelle larghezze 38, 40, 42, 44 e 46 cm, misurate esterno-esterno. È l'abbinamento perfetto con l'attacco Logo.

EN • Logo is a classic a-head stem for 26.0mm handlebar. The stem is forged from 6061 aluminium and has reversible graphics to be mounted with positive or negative 10-degree angle. Available in lengths 60, 80, 100 and 120mm with black finish. It is the perfect match with the Piega handlebar.

Forma Curva:
RHM Rapid Hand Movement
Materiale:
Alluminio 6061 a doppio spessore
Ø Manubrio:
26 mm
Profondità:
75 mm
Altezza:
130 mm
Misure:
38 • 40 • 42 • 44 • 46 cm
(esterno - esterno)
Peso:
280 g (42 cm)
Finitura:
Anodizzato Nero

Shape:
RHM Rapid Hand Movement
Material:
Double butted Alloy 6061
Ø Handlebar:
26 mm
Reach:
75 mm
Drop:
130 mm
Sizes:
38 • 40 • 42 • 44 • 46 cm
(outside - outside)
Weight:
280 g (42 cm)
Finish:
Black Anodized

↓ Description	↓ Deda Part Code	↓ EAN13 Code
PIEGA, handlebar, aluminium 6061, 38 cm, Ø 26, RHM, black	PIEGA38	8051406522148
PIEGA, handlebar, aluminium 6061, 40 cm, Ø 26, RHM, black	PIEGA40	8051406522155
PIEGA, handlebar, aluminium 6061, 42 cm, Ø 26, RHM, black	PIEGA42	8051406522162
PIEGA, handlebar, aluminium 6061, 44 cm, Ø 26, RHM, black	PIEGA44	8051406522179
PIEGA, handlebar, aluminium 6061, 46 cm, Ø 26, RHM, black	PIEGA46	8051406522186

LOGO

Anodizzato nero
Black anodized

IT • Logo è un classico attacco tipo a-head per manubrio da 26 mm. L'attacco è forgiato in alluminio 6061 e ha una grafica reversibile per essere montato con angolo +/- 10 gradi. Disponibile nelle lunghezze 60, 80, 100 e 120 mm con la finitura black. È l'abbinamento perfetto con il manubrio Piega.

EN • Logo is a classic a-head stem for 26 mm handlebar. The stem is forged from 6061 aluminium and has reversible graphics to be mounted with positive or negative 10-degree angle. Available in lengths 60, 80, 100 and 120 mm with black finish. It is the perfect match with the Piega handlebar.

Materiale:
Alluminio 6061 forgiato
Viteria:
Acciaio
Angolo:
80°
Ø Manubrio:
26,0 mm
Cannotto Forcella:
1 1/8" (28,6mm)
Altezza Attacco:
40 mm
Misure:
60 • 80 • 100 • 120 mm
Peso:
178 g (110 mm)
Finitura:
Anodizzato Nero

Material:
Alloy 6061 forged
Screws:
Steel
Angle:
80°
Ø Handlebar:
26,0 mm
Fork Steerer:
1 1/8" (28,6mm)
Clamp Height:
40 mm
Sizes:
60 • 80 • 100 • 120 mm
Weight:
178 g (110 mm)
Finish:
Black Anodized

↓ Description	↓ Deda Part Code	↓ EAN13 Code
LOGO, stem, aluminium 6061, 60 mm, 80°, x handlebar Ø 26 mm, reversible +/-10°	LOGO60	8051406521363
LOGO, stem, aluminium 6061, 80 mm, 80°, x handlebar Ø 26 mm, reversible +/-10°	LOGO80	8051406521400
LOGO, stem, aluminium 6061, 100 mm, 80°, x handlebar Ø 26 mm, reversible +/-10°	LOGO100	8051406521325
LOGO, stem, aluminium 6061, 120 mm, 80°, x handlebar Ø 26 mm, reversible +/-10°	LOGO120	8051406521349

Serie Sterzo
Headsets

DCR	12
S-DCR	13
S-DCR Cover Kit	15
IN-4	223
IN-5	224
HSS46	225
Classic 1	226
Classic 2	227
NEW Expander Monza	229
Expander 45	229
Headset Box	230
Topcap	230
Monza Topcap	230
Carbon Spacers	231
Metal Spacers	231
Spada	231
Alloy Sleeve	231

IN-4

Road Gravel MTB

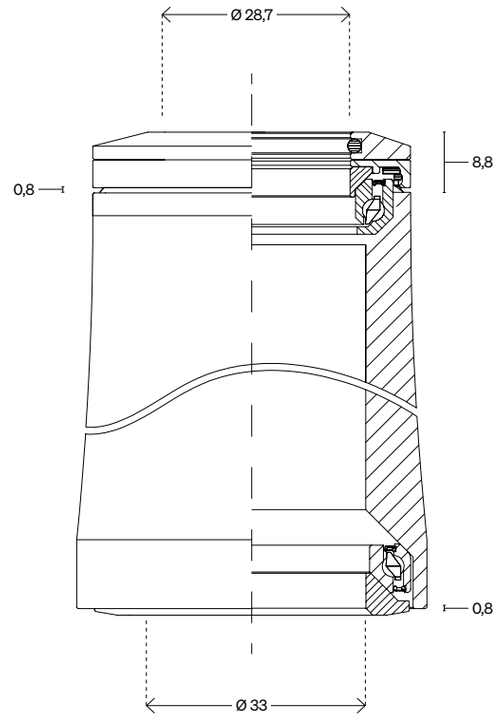

IT • Deda IN-4 è una serie sterzo integrata differenziata per forcelle coniche 1 1/8” – 1 1/4” da corsa o mtb con cuscinetti ACB (angular contact bearing) in acciaio. Compatibile con l’innovativo sistema di impilamento dei distanziali Deda H.S.S. (Headset stack spacers) direttamente sopra il tubo sterzo del telaio. Esclusiva grafica e finitura POB (Polish on black).

EN • Deda IN-4 headset is an integrated and tapered headset for 1 1/8” - 1 1/4” road or mtb forks with superior ACB (angular contact bearing) steel bearings. Compatible with innovative Deda H.S.S. System (headset stack spacers) that allows to mount spacers directly over the headtube. Exclusive graphics and POB (Polish on black) finish.

Modello Serie Sterzo:
Integrata 1 1/8” - 1 1/4”
Tipo di Cuscinetti:
A contatto angolare (acb) in acciaio cromo
Misura Cuscinetti:
• Superiore 41.8×30.5×8 mm
• Inferiore 46.9×34.1×7 mm
Angolo di contatto:
45°×45°
Tubo Sterzo Telaio:
• Conico da Ø 46 mm superiore;
• Ø 52 mm inferiore
Cannotto Forcella:
Conica 1 1/8” (28.60 mm) - 1 1/4” (31.75 mm)
Calotta superiore:
Ø 46 mm; Alluminio
Cono di base:
Ø 33 mm; Alluminio
Altezza Serie Sterzo:
9.6 mm (8.8 + 0.8)
Peso:
73 g
Note:
Compatibile con sistema di impilamento distanziali Deda H.S.S

Headset Model:
Integrated 1 1/8” - 1 1/4”
Bearings Type:
Angular contact bearing; Chrome steel
Bearings Size:
• Upper 41.8×30.5×8 mm
• Lower 46.9×34.1×7 mm
Contact Angle:
45°×45°
Headtube:
• Tapered Ø 46 mm Upper;
• Ø 52 mm Lower
Fork Steerer:
Tapered 1 1/8” (28.6 mm) - 1 1/4” (31.75 mm)
Top Cover:
Ø 46 mm; Alloy
Crown race:
Ø 33.0 mm; Alloy
Stack Height:
9.6 mm (8.8 + 0.8)
Weight:
73 g
Note:
Compatible with headset stack spacers system Deda H.S.S

↓ Description	↓ Deda Part Code	↓ EAN13 Code
IN-4 ALLOY, headset, 1"1/8 - 1"1/4, bearings steel, topcover 46 mm	HDIN84ASUJN	8052783484333

IN-5

Road Gravel MTB

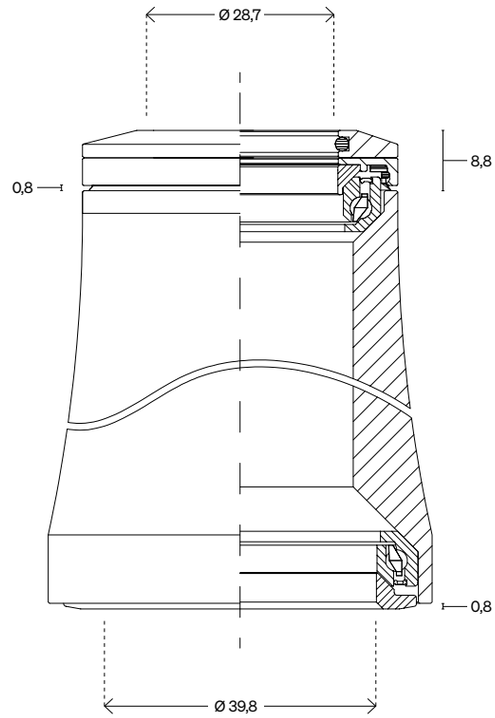

IT • Deda IN-5 è una serie sterzo integrata differenziata per forcelle coniche 1 1/8” – 1.5” da corsa o mtb con cuscinetti ACB (angular contact bearing) in acciaio. Compatibile con l’innovativo sistema di impilamento dei distanziali Deda H.S.S. (Headset stack spacers) direttamente sopra il tubo sterzo del telaio. Esclusiva grafica e finitura POB (Polish on black).

EN • Deda IN-5 headset is an integrated and tapered headset for 1 1/8” – 1.5” road or mtb forks with superior ACB (angular contact bearing) steel bearings. Compatible with innovative Deda H.S.S. System (headset stack spacers) that allows to mount spacers directly over the headtube. Exclusive graphics and POB (Polish on black) finish.

Modello Serie Sterzo:
Integrata 1 1/8” - 1.5”
Tipo di Cuscinetti:
A contatto angolare (ACB) in acciaio cromo
Misura Cuscinetti:
• Superiore 41.8×30.5×8 mm
• Inferiore 51.9×40×8 mm
Angolo di contatto:
45° × 45°
Tubo Sterzo Telaio:
• Conico da Ø 46.0 mm superiore
• Ø 56.0 mm inferiore
Cannotto Forcella:
Conica 1 1/8” (28.60 mm) - 1.5” (38.10 mm)
Calotta superiore:
Ø 46 mm; Alluminio
Cono di base:
Ø 39.8 mm; Alluminio
Altezza Serie Sterzo:
9.6 mm (8.8 + 0.8)
Peso:
76 g
Note:
Compatibile con sistema di impilamento distanziali Deda H.S.S

Headset Model:
Integrated 1 1/8” - 1.5”
Bearings Type:
Angular contact bearing; chrome steel
Bearings Size:
• Upper 41.8×30.5×8 mm
• Lower 51.9×40×8 mm
Contact Angle:
45° × 45°
Headtube:
• Tapered Ø 46.0 mm upper
• Ø 56.0 mm lower
Fork Steerer:
Tapered 1 1/8” (28.6 mm) - 1.5” (38.10 mm)
Top Cover:
Ø 46 mm; Alloy
Crown race:
Ø 39.8 mm; Alloy
Stack Height:
9.6 mm (8.8 + 0.8)
Weight:
76 g
Note:
Compatible with headset stack spacers system Deda H.S.S

↓ Description	↓ Deda Part Code	↓ EAN13 Code
IN-5 ALLOY, headset, 1"1/8 - 1.5", bearings steel, topcover 46mm	HDIN85ASUJN	8052783484357

HSS 46 Carbon/Alloy Spacers

HSS 46
Carbon Spacers

HSS 46
Alloy Spacers

Traditional headset stack
spacers system

Deda HSS headset stack
spacers system

IT • L'innovativo sistema di impilamento dei distanziali Deda H.S.S permette di posizionare gli spessori direttamente sotto il topcover, al contrario dei sistemi tradizionali. Questo conferisce allo sterzo della bicicletta un look completamente nuovo e più allineato con il moderno design del tubo sterzo. Il sistema Deda H.S.S garantisce una migliore integrazione degli spessori con il telaio aumentando allo stesso tempo la rigidità e guidabilità della bicicletta.
Esclusiva grafica e finitura POB (Polish on black).

EN • The innovative Deda H.S.S headset stack spacers system allows installing spacers directly under the top cover, unlike the traditional systems. This gives to the bicycle a completely new looking that better matches modern headtube designs. Deda H.S.S results in a better integration of the headset spacers with the frame increasing at the same time the stiffness and bike handling.
Exclusive graphics and POB (Polish on black) finish.

Materiale:
Carbonio o alluminio
Misura:
Disponibili per tubi sterzo Ø 46 mm
Altezza (Un kit include):
• 1 × 3 mm
• 1 × 5 mm
• 1 × 10 mm
Finitura:
Carbonio Ud; Anodizzato Nero (Versione Alluminio)
Note:
Compatibili solo con canotto forcella da 1 1/8" (28.6 mm).

Material:
Carbon or aluminium
Width:
Available for Ø 46 mm headtube
Height (The kit includes):
• 1 × 3 mm
• 1 × 5 mm
• 1 × 10 mm
Finish:
Carbon Ud; Black anodized (Aluminium Version)
Note:
Compatible with 1 1/8" (28.6 mm) fork steerer only.

↓ Description	↓ Deda Part Code	↓ EAN13 Code
HSS spacers aluminium, Ø 46, 1 set (1×3, 1×5, 1×10), BOB logo	HDHSSA46N	8052783484364
HSS spacers carbon, Ø 46, 1 set (1×3, 1×5, 1×10), BOB logo	HDHSSC46N	8052783484371

Classic 1 ®

Road Gravel MTB

Finitura Black polish
Black polish finish

Finitura Silver polish
Silver polish finish

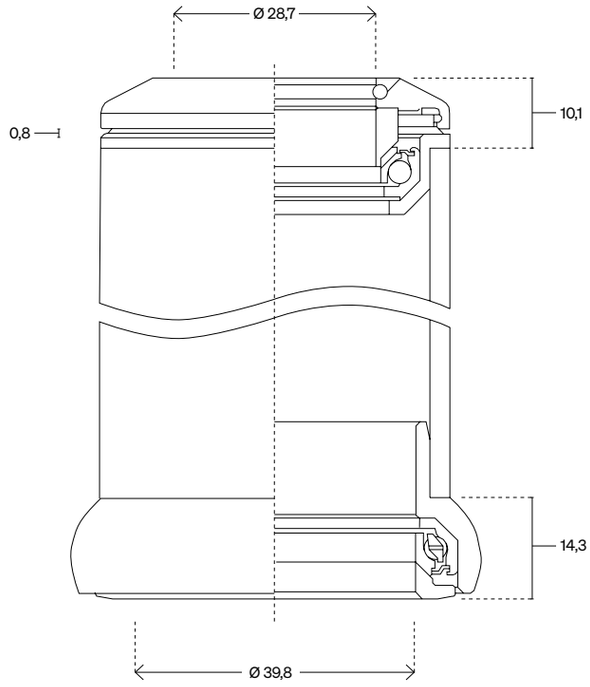

IT • Deda ha creato la nuova serie Classic® dedicata a moderni telai in titanio, acciaio e alluminio. Il modello Classic1 si adatta a tubi sterzi da 44mm di diametro interno con calotta esterna inferiore per forcella conica da 1.5” e semi-integrata superiore da 1 1/8”. La serie sterzo è caratterizzata dalla raffinata finitura black o silver polish per intonarsi a qualsiasi colore di telaio.

EN • Deda created the new Classic® headset series to fit solutions in titanium, steel and alloy modern bicycle frames. The Classic 1 model is designed to fit 44mm i.d. headtube with an external lower cup for 1.5” tapered steerer fork combined with a 1-1/8”semi-integrated upper. The headset comes with a luxury black or silver polish finish to match any frame color.

Materiale:
Calotte in alluminio
Cuscinetti in acciaio
Finitura:
Black o Silver polish
Peso:
91 g

Material:
Alloy cups
Chrome steel bearings
Finish:
Black or Silver polish
Weight:
91 g

↓ Description	↓ Deda Part Code	↓ EAN13 Code
CLASSIC1, headset semi-integrated, upper 1"1/8, lower 1.5", Black	HDCLASSIC1	8052783486863
CLASSIC1, headset semi-integrated, upper 1"1/8, lower 1.5", Silver	HDCLASSIC1S	8052783488997

Classic 2 ®

Gravel Road

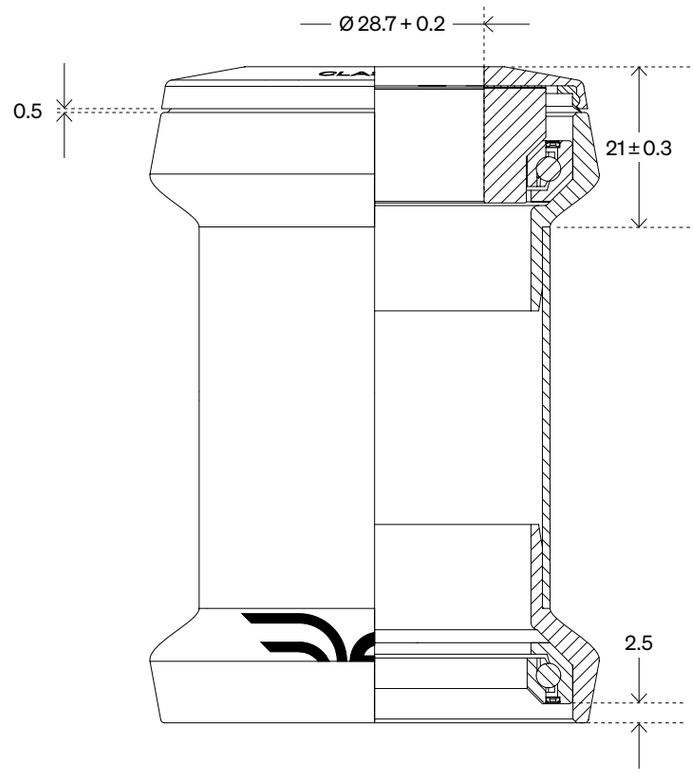

IT • La serie sterzo Classic® è stata appositamente progettata per integrarsi perfettamente con i moderni telai in titanio, acciaio e alluminio. Il modello Classic 2 è ottimizzato per adattarsi a tubi con un diametro interno di 44 mm ed è compatibile con calotte superiori e inferiori esterne per cannotto forcella conico da 1,5". Questo modello include un top cover superiore rotondo in alluminio da 56 mm, che può essere facilmente sostituito con top cover Alanera RS, Vinci o Superbox per personalizzare l'aspetto della tua bicicletta. La finitura lucida nera si abbina perfettamente a qualsiasi colore del telaio.

EN • Deda created the Classic® headset series to fit solutions in titanium, steel and alloy modern bicycle frames. The Classic 2 model is designed to fit 44 mm i.d. headtube with a external upper & lower cups for 1.5" tapered steerer. It comes with a 56 mm alloy round top cover interchangeable with Alanera RS, Vinci or Superbox top cover. The headset comes with a luxury black polish finish to match any frame color.

Materiale:
Calotte in alluminio, cuscinetti in acciaio cromato, compression ring in nylon.
Misura dei cuscinetti:
• Superiore 51,9×40×8 mm
• Inferiore 51,9×40×8 mm
Angolo di contatto:
• Superiore 45°×45°
• Inferiore 45°×45
Cono di base:
Ø 39.8 mm in alluminio
Altezza serie sterzo:
21 mm
Peso:
145 g
Finitura:
Nero lucido

Material:
Alloy cups. Chrome steel bearings. Nylon compression ring
Bearing size:
• Upper 51,9×40×8 mm
• Lower 51,9×40×8 mm
Contact angle:
• Upper 45°×45°
• Lower 45°×45°
Crown race:
Ø 39.8 mm aluminum
Stack height:
21 mm
Weight:
145 g
Finish:
POB finish

↓ Description	↓ Deda Part Code	↓ EAN13 Code
CLASSIC2, headset, external cups, bearings 1.5", for headtube Ø 44 mm, Black	HDCLASSIC2	8055774360708

euskaltel
EUSKADI
urbycolan
TOYOTA
Euskadi
AGU
UCI
GARMIN
DURA-ACE
ABUS

Expander Monza

Road Gravel MTB

Tappo alluminio disponibile anche come ricambio (Monza Top Cap)/ Alloy topcap available also as spare part (Monza Top Cap).

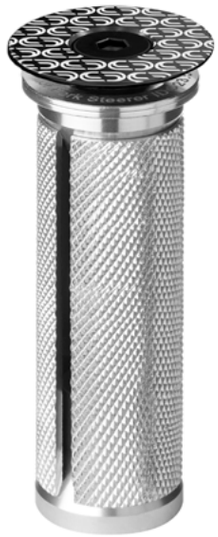

IT • Sistema di compressione per serie sterzo a-head. L'expander da 70 mm garantisce un serraggio migliorato e sicuro della forcella. Perfetto per tutti i cannotti forcella in carbonio. Include un tappo superiore superleggero con vite in lega M6×30 mm.

EN • Compression system for a-head set. The expander with 70 mm sleeve guarantees an improved and safe tightening of the fork. Perfect for all carbon forks steerer. It comes with a superlight top cap including alloy bolt M6×30 mm.

Materiale:
Alluminio 6061
Lunghezza:
70 mm
Diametro:
23.5 mm (Prima dell'espansione)
Vite serraggio:
Alluminio 2014
Compatibilità:
Forcelle da 1 1/8" con diametro interno da 23.5 a 25.5 mm
Tappo expander:
Alluminio 6061
Peso:
46 g
Note:
Disponibile anche senza tappo. (Modello 70-A)

Material:
Alloy 6061
Length:
70 mm
Diameter:
23.5 mm (Before to be expanded)
Screw:
Alloy 2014
Compatibility:
Fits 1 1/8" forks steerer with 23.5 a 25.5 mm I.d
Expander Top Cap:
Alloy 6061
Peso:
46 g
Note:
Available also without topcap. (Model 70-A)

Expander 45

Road Gravel MTB

IT • L'expander in alluminio con lunghezza di 45 mm è compatibile con forcelle da 1 1/8" e diametro interno da 23.5 a 25.5 mm. Anodizzato rosso.

EN • Expander in 6061 aluminium with 45 mm length. Fits 1 1/8" carbon fork steerer with Ø 23,5 to 25,5 mm I.D. Red anodized color.

Materiale:
Alluminio 6061
Lunghezza:
45 mm
Diametro:
23.5 mm (Prima dell'espansione)
Vite serraggio:
Alluminio 2014
Compatibilità:
Forcelle da 1 1/8" con diametro Interno da 23.5 a 25.5 mm
Peso:
32 g

Material:
Alloy 6061
Length:
45 mm
Diameter:
23.5 mm (Before to be expanded)
Screw:
Alloy 2014
Compatibility:
Fits 1 1/8" forks steerer with 23.5 a 25.5 mm I.d
Peso:
32 g

↓ Description	↓ Deda Part Code	↓ EAN13 Code
EXPANDER Monza, 70 × 23.5 mm, for fork carbon 1 1/8", black topcap, Bolt M6×30	HDEXL23MONZA	8059493280187
EXPANDER 70-A, 70 × 23.5 mm, for fork carbon 1 1/8", without topcap	HDEXL23X70	8052783487853
EXPANDER 45 mm × 23.5 mm w/o topcap, for 1 1/8" carbon fork	HDEXL23X45	8059265680764

Headset Box

IT • Valigetta ricambi serie sterzo, lo strumento perfetto per Distributori e Rivenditori. Include tutti i pezzi di ricambio per un efficiente servizio su bici da strada, gravel, mtb e modelli con passaggio cavi interno DCR. Puoi trovare all'interno ricambi come cuscinetti da 1"-1/8, 1"-1/4" e 1.5", coperchio superiore, expander, anelli di compressione e micro-spessori.

EN • Headset spare parts box, the perfect tool for Distributors and Dealers. The box includes all spare parts for an efficient service on road&gravel&mtb bikes as well as bike models featuring DCR internal cable routing.
You can find spares such as 1"-1/8, 1"-1/4" and 1.5" bearings, top cover, expanders, compression rings and micro-shims.

Topcap

IT • Tappo forcella piatto per serie sterzo da 1 1/8". Anodizzato nero con logo laserato. Lo stile Deda in ogni dettaglio.

EN • Flat top cap for 1 1/8" headset. Available in black anodized color with laser etched logo. Deda style in every detail.

Monza Topcap

IT • Limited edition del topcap in alluminio con un esclusiva texture del logo Deda. Include la vite in alluminio per un peso ultraleggero. Disponibili in 6 colori: black, red, silver, blue, green, gold.
Peso: 8 g (incluso vite)

EN • Limited edition of topcap with an exclusive texture of Deda logo. Include an alloy screw for a superlight weight. Available in six colours: black, red, silver, blue, green, gold. Weight: 8 g (screw included)

↓ Description	↓ Deda Part Code	↓ EAN13 Code
DEDA HEADSET SPARE PARTS BOX, VALIGETTA RICAMBI	HDSPBOX	8055774360678
Topcap Flat, for headset 1 1/8", Deda logo, black, bolt aluminium M6×30 mm	HDTCAP	8059265680771
MONZA topcap, BLACK, for headset 1 1/8", bolt aluminium M6×30 mm	HDTPMONZA1	8052783487501
MONZA topcap, RED, for headset 1 1/8", bolt aluminium M6×30 mm	HDTPMONZA2	8052783487518
MONZA topcap, SILVER, for headset 1 1/8", bolt aluminium M6×30 mm	HDTPMONZA3	8052783487525
MONZA topcap, BLUE, for headset 1 1/8", bolt aluminium M6×30 mm	HDTPMONZA4	8052783487532
MONZA topcap, GREEN, for headset 1 1/8", bolt aluminium M6×30 mm	HDTPMONZA5	8052783487549
MONZA topcap, GOLD, for headset 1 1/8", bolt aluminium M6×30 mm	HDTPMONZA6	8052783487556

Carbon Spacers

IT • Realizzati in fibra di carbonio ad alto modulo e finiti con tessuto UD con carbonio a vista. Per forcella con cannotto Ø 28,60 mm, serie sterzo da 1' 1/8. Esterno Ø 33,5 mm; interno Ø 28,9 mm. Disponibili con altezza 3 • 5 • 10 • 15 • 20 mm.

EN • Made in high modulus carbon fiber with UD external layer. Fits 1 1/8" headset (fork steerer outside Ø 28,6 mm). Outside Ø 33,5 mm; inside Ø 28,9 mm. Available in 3 • 5 • 10 • 15 • 20 mm height.

Alloy Spacers

IT • Spessori in alluminio anodizzati nero. Per forcella con cannotto Ø 28,60 mm, serie sterzo da 1' 1/8. Esterno Ø 34,0 mm; interno Ø 28,9 mm. Disponibili con altezza 3 • 5 • 10 mm.

EN • Aluminium spacers made in 6061 alloy series, black anodized. Fits 1 1/8" headset (fork steerer outside Ø 28,6 mm). Outside Ø 34,0 mm; inside Ø 28,9 mm. Available in 3 • 5 • 10 mm height.

Spada

IT • Spada è un gambo manubrio che consente il montaggio di attacchi tipo a-head su biciclette con forcella e serie sterzo tradizionali filettate.
Ø gambo 22,2 mm; Ø testa 25,4 mm.
Altezza: 140 mm; Peso: 140 g

EN • Spada is a quill stem adapter to install a-head stems on bicycles with traditional threaded fork and headset.
Ø quill 22,2 mm; Ø head 25,4 mm.
Height: 14 0mm; Weight: 140 g

Alloy Sleeve

IT • Adattatore attacco manubrio da 28.6 mm a 25.4 mm, per cannotto forcella tradizionale da 1". Realizzato in alluminio 6061. Anodizzato nero.

EN • Stem sleeve adapter from 28.6 mm to 25.4 mm, for traditional 1" fork steerer. Made in 6061 alloy series. Black anodized.

↓ Description	↓ Deda Part Code	↓ EAN13 Code
Kit carbon spacers, 3 mm, 1 set = 10 pcs, for headset 1"1/8	HDCS03KIT	8059265688333
Kit carbon spacers, 5 mm, 1 set = 10 pcs, for headset 1"1/8, logo Deda	HDCS05KIT	8059265688340
Kit carbon spacers, 10 mm, 1 set = 10 pcs, for headset 1"1/8, logo Deda	HDCS10KIT	8059265688357
Kit carbon spacers, 15 mm, 1 set = 5 pcs, for headset 1"1/8, logo Deda	HDCS15KIT	8059265688364
Kit carbon spacers, 20 mm, 1 set = 5 pcs, for headset 1"1/8, logo Deda	HDCS20KIT	8059265688371
Kit alloy spacers, 3 mm, 1 set = 10 pcs, for headset 1"1/8	HDAS03KIT	8059265688388
Kit alloy spacers, 5 mm, 1 set = 10 pcs, for headset 1"1/8, logo Deda	HDAS05KIT	8059265688395
Kit alloy spacers, 10 mm, 1 set = 10 pcs, for headset 1"1/8, logo Deda	HDAS10KIT	8059265688401
SPADA, stem adapter, aluminium, for a-headset, black	SPADA	8051406523329
ALLOY SLEEVE, stem adapter 28.6 mm > 25.4 mm, black	ALLOYSLEEVE	8051406523299

Nastri Manubrio
Handlebar Tapes

Loop	**233**
Loop End-Plug	**234**
Presa	**235**
Mistral	**236**
Fluo	**236**
Special	**236**
Traforato	**236**
Deda Tape	**237**

Loop

Nero/Rosso
Black/Red
→ 600

Nero/Argento
Black/Silver
→ 601

Nero/Marrone
Black/Brown
→ 608

POB (Polish on black)
POB (Polish on black)
→ 607

Nero/Celeste
Black/Sea Foam Green
→ 609

Nero/Giallo
Black/Yellow
→ 603

Tappi alluminio inclusi, colore abbinato al nastro.
Tono su tono.

Aluminum end-plugs included, matching with the tape color.
Tone to tone.

IT • Il nastro manubrio Loop è un'aggiunta di livello professionale alla tua bici con un peso incredibilmente leggero e un comfort eccezionale. Questo nastro bicolore ha un'estetica unica ed è disponibile in molte combinazioni di colori. Il nastro viene fornito con tappi in alluminio dello stesso colore del nastro. È realizzato con due diversi strati per uno spessore finale di 2,5 mm e una lunghezza di 200 cm per trovare il perfetto equilibrio tra leggerezza, durata e presa. Il nastro è dotato di un gel adesivo che lo rende facile da avvolgere e mantiene pulito il manubrio una volta rimosso.

EN • The Loop bar tape is a professional level addition to your bike with incredibly light weight and outstanding comfort. This bi-color grip has a unique aesthetic and comes in many color combinations. The tape comes with aluminum end plugs in the same color as the tape. It is made with two different layers for a final thickness of 2.5 mm and 200 cm length to strike the perfect balance of lightness, durability and grip. The tape features an adhesive gel which makes it easy to wrap and keeps the handlebar clean once it is removed.

Materiale:
EVA + PU
Lunghezza:
200 cm
Larghezza:
3 cm
Spessore:
2,5 mm
Colori:
POB; Nero/Rosso; Nero/Argento; Nero/Giallo; Nero/Marrone; Nero/Celeste.
Peso:
86 g (Tappi esclusi)
Note:
Tappi manubrio Loop inclusi

Material:
EVA + PU
Length:
200 cm
Width:
3 cm
Thickness:
2,5 mm
Colors:
POB; Black/Red; Black/Silver; Black/Yellow; Black/Brown; Black/Sea Foam Green.
Weight:
86 g (End-plugs excluding)
Note:
End-plugs Loop included

↓ Description	↓ Deda Part Code	↓ EAN13 Code
LOOP BLACK-RED, tape, thickness 2,5 mm, length 200 mm, adhesive gel	DEDATAPE600	8052783487907
LOOP BLACK-SILVER, tape, thickness 2,5 mm, length 200 mm, adhesive gel	DEDATAPE601	8052783487914
LOOP BLACK-YELLOW, tape, thickness 2,5 mm, length 200 mm, adhesive gel	DEDATAPE603	8052783487938
LOOP POB, tape, thickness 2,5 mm, length 200 mm, adhesive gel	DEDATAPE607	8052783488973
LOOP BLACK-BROWN, tape, thickness 2,5 mm, length 200 mm, adhesive gel	DEDATAPE608	8052783489536
LOOP BLACK-SEA FOAM, tape, thickness 2,5 mm, length 200 mm, adhesive gel	DEDATAPE609	8055774362719

Loop End Plug

IT • Tappi manubrio in alluminio anodizzato con texture Deda laserata. Sistema di chiusura a expander per un fissaggio sicuro del nastro semplicemente chiudendo con una chiave a brugola. 24 g (set)

EN • Aluminium bar end-plugs with anodized finish and texturized Deda logos. Include an expander system to fix the tape into the handlebar by simply tightening with an allen key. Weight: 24 g (set)

← Black

← Blue

← Gold

← Green

← Silver

← Red

↓ Description	↓ Deda Part Code	↓ EAN13 Code
LOOP END-PLUG, black, expander system, 1 set = 2 pcs	TAPPOLOOP1	8052783487563
LOOP END-PLUG handlebar, ROSSO, expander system, 1 set = 2 pcs	TAPPOLOOP2	8052783487570
LOOP END-PLUG handlebar, SILVER, expander system, 1 set = 2 pcs	TAPPOLOOP3	8052783487587
LOOP END-PLUG handlebar, BLU, expander system, 1 set = 2 pcs	TAPPOLOOP4	8052783487594
LOOP END-PLUG handlebar, VERDE, expander system, 1 set = 2 pcs	TAPPOLOOP5	8052783487600
LOOP END-PLUG handlebar, ORO, expander system, 1 set = 2 pcs	TAPPOLOOP6	8052783487617

Presa

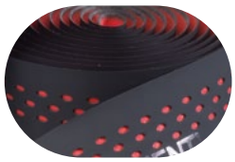

Black/red
→ 402

Black/orange
→ 405

Black/yellow
→ 410

Black/fucsia
→ 409

Black/pink
→ 404

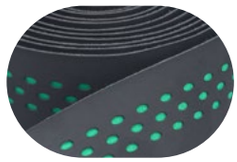

Black/green
→ 408

Black/sea foam green
→ 407

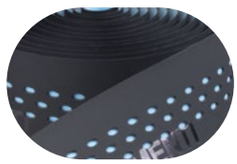

Black/blue sky
→ 403

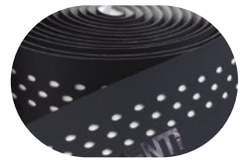

Black/white
→ 401

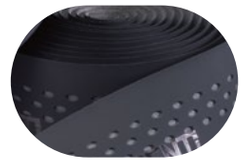

Black/grey
→ 400

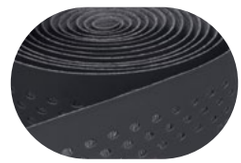

Black/glossy black
→ 406

IT • Il nastro adesivo Presa è tre in uno. È morbido, appiccicoso e resistente. È perfetto per giornate difficili, giornate lunghe, giornate piovose. Rotoli da 210 cm per confezione e 30 mm di larghezza, mentre lo spessore di 3 mm al centro offrirà un comfort fantastico. Il materiale di base è realizzato in schiuma EVA in diversi colori ed è rivestito con materiale di superficie in poliuretano nero perforato.

EN • The Presa bar tape is three in one. It is soft, sticky, and durable. It's perfect for hard days, long days, wet days. 210cm rolls per package and 30mm wide, while the 3mm thickness in the middle will deliver a fantastic comfort. The base material is made of EVA foam in different colors, and is covered with black perforated, tacky polyurethane surface material.

Materiale:
EVA + Uno strato superficiale in PU
Lunghezza:
210 cm
Larghezza:
30 mm
Spessore:
3 mm
Peso:
85 g
Note:
Include speciali adesivi

Material:
EVA combined with tacky PU surface
Length:
210 cm
Width:
30 mm
Thickness:
3 mm
Weight:
85 g
Note:
Includes special stickers

↓ Description	↓ Deda Part Code	↓ EAN13 Code
PRESA BLACK-GREY, tape, thickness 3,0 mm, length 210 mm	DEDATAPE400	8059265689484
PRESA BLACK-WHITE, tape, thickness 3,0 mm, length 210 mm	DEDATAPE401	8059265689491
PRESA BLACK-RED, tape, thickness 3,0 mm, length 210 mm	DEDATAPE402	8059265689507
PRESA BLACK-BLUE SKY, tape, thickness 3,0 mm, length 210 mm	DEDATAPE403	8059265689514
PRESA BLACK-PINK, tape, thickness 3,0 mm, length 210 mm	DEDATAPE404	8059265689521
PRESA BLACK-ORANGE, tape, thickness 3,0 mm, length 210 mm	DEDATAPE405	8052783481271
PRESA BLACK-BLACK POLISH, tape, thickness 3,0 mm, length 210 mm	DEDATAPE406	8052783482742
PRESA BLACK-SEA FOAM, tape, thickness 3,0 mm, length 210 mm	DEDATAPE407	8052783482759
PRESA BLACK-GREEN, tape, thickness 3,0 mm, length 210 mm	DEDATAPE408	8052783483923
PRESA BLACK-FUCSIA, tape, thickness 3,0 mm, length 210 mm	DEDATAPE409	8052783483480
PRESA BLACK-YELLOW, tape, thickness 3,0 mm, length 210 mm	DEDATAPE410	8052783486962

Mistral, Fluo, Special, Traforato

↓ Mistral
Nastro in PU accoppiato
a un materiale espanso/ PU tape
combined with foam material

Effetto pelle/Leather touch
Peso/Weight: 70 g (Tappi inc./Inc. plugs)
Lunghezza/Length: 210 cm
Spessore/Thickness: 2,4 mm

Mistral Nero
Black Mistral
→ 97

Mistral Bianco
White Mistral
→ 98

Mistral Rosso
Red Mistral
→ 100

Mistral Blu Deda
Deda Blu Mistral
→ 101

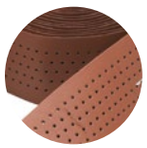
Leather
Leather
→ 102

Celeste
Sea Foam Green
→ 109

↓ Fluo
Nastro in PU accoppiato
a un materiale espanso/ PU tape
combined with foam material

Effetto pelle/Leather touch
Peso/Weight: 70 g (Tappi inc./Inc. plugs)
Lunghezza/Length: 210 cm
Spessore/Thickness: 2,4 mm

Verde Fluo
Fluo Green
→ 105

Giallo Fluo
Fluo Yellow
→ 106

Arancio Fluo
Fluo Orange
→ 107

Fucsia Fluo
Fluo Fuchsia
→ 108

↓ Special
Nastro in PU/PU tape

Effetto carbonio/Carbon look
Peso/Weight: 100 g (Tappi inc./Inc. plugs)
Lunghezza/Length: 190 cm
Spessore/Thickness: 2,7 mm

Carbonio Nero
Black Carbon
→ BLKCARB

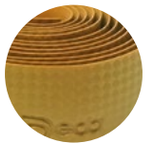
Oro Olimpico
Olimpic Gold
→ ORO

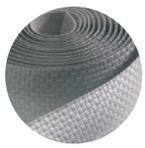
Carbonio Argento
Silver Carbon
→ SILCARB

Carbonio Bianco
White Carbon
→ WHICARB

↓ Traforato
Nastro in EVA forato/EVA perforated tape

Peso/Weight: 40 g (Tappi inc./Inc. plugs)
Lunghezza/Length: 180 cm
Spessore/Thickness: 2,7 mm

Traforato Nero
Black Perforated
→ 81

Traforato Bianco
White Perforated
→ 82

Traforato Rosso
Red Perforated
→ 85

↓ Description	↓ Deda Part Code	↓ EAN13 Code
MISTRAL RED, tape, thickness 2,4 mm, length 210 mm	DEDATAPE100	8051406522889
MISTRAL DARK BLUE, tape, thickness 2,4 mm, length 210 mm	DEDATAPE101	8051406522896
MISTRAL LEATHER, tape, thickness 2,4 mm, length 210 mm	DEDATAPE102	8051406522902
MISTRAL GREEN FLUO, tape, thickness 2,4 mm, length 210 mm	DEDATAPE105	8051406529093
MISTRAL YELLOW FLUO, tape, thickness 2,4 mm, length 210 mm	DEDATAPE106	8051406529109
MISTRAL ORANGE FLUO, tape, thickness 2,4 mm, length 210 mm	DEDATAPE107	8051406529116
MISTRAL FUCSIA, tape, thickness 2,4 mm, length 210 mm	DEDATAPE108	8051406525200
MISTRAL BLACK, tape, thickness 2,4 mm, length 210 mm	DEDATAPE97	8051406523152
MISTRAL WHITE, tape, thickness 2,4 mm, length 210 mm	DEDATAPE98	8051406523169
MISTRAL SEA FOAM, tape, thickness 2,4 mm, length 210 mm	DEDATAPE109	8055774362603
TRAFORATO BLACK, tape, thickness 2,7 mm, length 180 mm	DEDATAPE81	8051406523107
TRAFORATO WHITE, tape, thickness 2,7 mm, length 180 mm	DEDATAPE82	8051406523114
TRAFORATO RED, tape, thickness 2,7 mm, length 180 mm	DEDATAPE85	8051406523121
SPECIAL BLACK CARBON, tape, thickness 2,7 mm, length 190 mm	DEDATAPEBLKCARB	8051406523183
SPECIAL GOLD CARBON, tape, thickness 2,7 mm, length 190 mm	DEDATAPEORO	8051406523206
SPECIAL SILVER CARBON, tape, thickness 2,7 mm, length 190 mm	DEDATAPESILCARB	8051406523213
SPECIAL WHITE CARBON, tape, thickness 2,7 mm, length 190 mm	DEDATAPEWHICARB	8051406523237

Deda Tape

Nastro classico in EVA/EVA classic tape. Lunghezza/Length: 180 cm. Peso/Weight: 40 g. Spessore/Thickness: 2,8 mm

Mela Verde
Green Apple
→ 89

Ocra Intenso
Intense Ochre
→ 1500

Azzurro Finlandia
Finland Light Blue
→ 4300

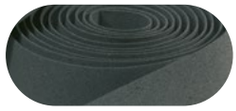
Grigio Antracite
Gun Barrel Grey
→ 4800

Cammello
Camel
→ 1100

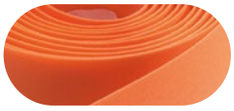
Arancione Milwaukee
Milwaukee Orange
→ 1600

Rosso Fuoco
Fuego Red
→ 4400

Azzurro Sky
Sky Blue
→ 5000

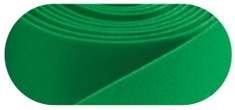
Verde Kawa
Kawa Green
→ 1200

Fucsia
Fucsia
→ 1700

Grigio Pantegana
Pantegan Grey
→ 4500

Pantera Rosa
Pink Panter
→ 5400

Bianco Polare
Polar White
→ 1300

Blu Oceano
Ocean Dark Blue
→ 4100

Celeste Treviglio
Sea Foam Green
→ 4600

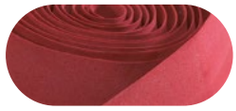
Chianti
Chianti Wine
→ 5500

Nero Notte
Night Black
→ 1400

Giallo Volo
Yellow Fly
→ 4200

Viola Vescovo
Bishop Violet
→ 4700

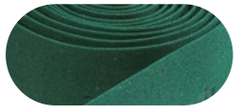
Verde Jaguar
Jaguar Green
→ 5600

↓ POP Tape

IT • Display nastri compatto.
Lo strumento di vendita perfetto per qualsiasi negozio di biciclette.
Il display può contenere oltre 30 nastri differenti per modelli e colori.
Realizzato in cartone, il display è leggero (6kg compresi i nastri) e le ridotte dimensioni sono adatte per il bancone o la vetrina del negozio.
Dimensioni cm 37 (L) × 20 (P) × 52 (H)

EN • Compact pop tape display.
The perfect sale tool for any bike shop.
The pop display holds more than 30 bar tapes, different models and colors.
Made of cardboard, the pop display is light (6kg including bar tapes) and the small size is suitable for the shop's desk or window.
Size cm 37 (L) × 20 (W) × 52 (H)

↓ Description	↓ Deda Part Code	↓ EAN13 Code
TAPE CAMEL, thickness 2,8 mm, length 180 mm	DEDATAPE1100	8051406520342
TAPE GREEN KAWA, thickness 2,8 mm, length 180 mm	DEDATAPE1200	8051406522926
TAPE WHITE POLAR, thickness 2,8 mm, length 180 mm	DEDATAPE1300	8051406522933
TAPE BLACK NIGHT, thickness 2,8 mm, length 180 mm	DEDATAPE1400	8051406522940
TAPE INTENSE OCHRE, thickness 2,8 mm, length 180 mm	DEDATAPE1500	8051406522957
TAPE ORANGE, thickness 2,8 mm, length 180 mm	DEDATAPE1600	8051406522964
TAPE FUCSIA, thickness 2,8 mm, length 180 mm	DEDATAPE1700	8052783486955
TAPE BLUE OCEAN, thickness 2,8 mm, length 180 mm	DEDATAPE4100	8051406522971
TAPE YELLOW FLY, thickness 2,8 mm, length 180 mm	DEDATAPE4200	8051406522988
TAPE FINLAND SKY, thickness 2,8 mm, length 180 mm	DEDATAPE4300	8051406522995
TAPE FUEGO RED, thickness 2,8 mm, length 180 mm	DEDATAPE4400	8051406523008
TAPE GERY PAN, thickness 2,8 mm, length 180 mm	DEDATAPE4500	8051406523015
TAPE SEA FOAM, thickness 2,8 mm, length 180 mm	DEDATAPE4600	8051406523022
TAPE BISHOP VIOLET, thickness 2,8 mm, length 180 mm	DEDATAPE4700	8051406523039
TAPE GUN BARREL, thickness 2,8 mm, length 180 mm	DEDATAPE4800	8051406523046
TAPE BLUE SKY, thickness 2,8 mm, length 180 mm	DEDATAPE5000	8051406523053
TAPE PINK PANTHER, thickness 2,8 mm, length 180 mm	DEDATAPE5400	8051406523077
TAPE CHIANTI RED, thickness 2,8 mm, length 180 mm	DEDATAPE5500	8051406523084
TAPE GREEN JAGUAR, thickness 2,8 mm, length 180 mm	DEDATAPE5600	8051406523091
TAPE GREEN APPLE, thickness 2,8 mm, length 180 mm	DEDATAPE89	8051406523138
* POP TAPE, bar tape display, includes 40 mixed tapes	POPTAPE3	8055774365604

(*) Disponibile su ordinazione. / Available on order.

Accessori
Accessories

Biciclette/Bicycles

Deda Tool Zipcase 239
SR1 → Portaborraccia/Bottle Cage 239
Vela → Portaborraccia/Bottle Cage 240
Gabbia Pro → Portaborraccia/Bottle Cage 241
Staffa → Seatpost Mount Kit 242
DBA Battery Adapter 244
Dog Fang 244
D-Clip 244

Abbigliamento/Apparel

NEW T-Shirt Celebrating Cycling 245

Zipcase

IT • Deda tool zipcase è un elegante e utile contenitore per camere d'aria, bombolette CO2 e altri accessori. Si adatta al portaborraccia ed è realizzato in materiale eva con finitura carbon.

Materiale:
EVA
Misure:
73 × 67 × 210 mm
Colore:
Finitura carbonio
Peso:
75 g

EN • Deda Tool zipcase is an elegant and useful bag to keep a repair kit, CO2 cartridge or other personal items. It fits the bottle cage and is made in EVA material with carbon looking.

Material:
EVA
Size:
73 × 67 × 210 mm
Colours:
Carbon looking
Weight:
75 g

SR1

IT • SR1 è un porta borraccia ultra-light realizzato in carbonio. Adatto per borracce diametro standard di 73 mm.

Materiale:
Carbonio UD
Colore:
Nero
Compatibilità:
Adatto per borracce con diametro 73 mm
Peso:
18 g

EN • The SR1 is an ultra-light bottle cage made in full carbon. Suitable for bottle diameter of 73 mm.

Material:
UD carbon
Colours:
Black
Compatibility:
Suitable for bottle diameter of 73 mm
Weight:
18 g

↓ Description	↓ Deda Part Code	↓ EAN13 Code
ZIPCASE, tool box, nylon, carbon finish	ZIPCASE	8059265686445
SR1, bottlecage, carbon	SR1N	8059265688876

Vela

↓ White

↓ Team

↓ POB (Polish on black)

IT • Vela è un portaborraccia ad apertura laterale con un sistema di aggancio molto facile che permette di inserire e estrarre la borraccia lateralmente da destra. Vela è realizzata con un polimero ad alta densità per aumentare la forza di aggancio. Progettata per adattarsi anche a telai di bici di piccola misura.

EN • Vela is a side load bottle cage for an easy clamping that allows you to insert the bottle sideways from the right. Vela is made in high-density polymer to increase the clamping force. Designed to fit small bike frames.

Materiale:
Polimero ad alta resistenza
Finitura:
Nero opaco
Colori:
POB (Polish on Black), Team e White
Peso
48 g

Material:
High-resistance polymer
Finish:
Black matt
Colors:
POB (Polish on Black), Team and White
Weight:
48 g

↓ Description	↓ Deda Part Code	↓ EAN13 Code
VELA, bottlecage, nylon, right side loading, POB	VELA1	8052783486030
VELA, bottlecage, nylon, right side loading, TEAM	VELA2	8052783486047
VELA, bottlecage, nylon, right side loading, WHITE	VELA3	8052783486054

Gabbia Pro

↓ POB (Polish on Black)

↓ Team

IT • Il nuovo Gabbia PRO è un portaborraccia caratterizzato da un'elevata resistenza e leggerezza, realizzato in tecno-polimero ad alta densità, ideale per garantire il fissaggio sicuro della borraccia durante l'attività ciclistica. Disponibile in finitura POB (Polish on black) e Team.

EN • New Gabbia PRO is a lightweight and durable bottle cage made from high-density techno polymer, ensuring a secure hold for your bottle even on rough terrain or during intense cycling sessions. Available in POB (Polish on black) and Team finish.

Materiale:
Tecno-polymero ad alta resistenza
Finitura:
Esterno opaco, interno lucido
Colori:
POB (Polish on Black) e Team
Peso
30 g

Material:
Techno-Polymer High Resistance
Finish:
Outside matt, inside glossy
Colors:
POB (Polish on Black) and Team
Weight:
30 g

↓ Description	↓ Deda Part Code	↓ EAN13 Code
GABBIA PRO, bottlecage, nylon, POB	GABBIAPRO1	8055774367776
GABBIA PRO, bottlecage, nylon, TEAM	GABBIAPRO2	8055774367783

Staffa

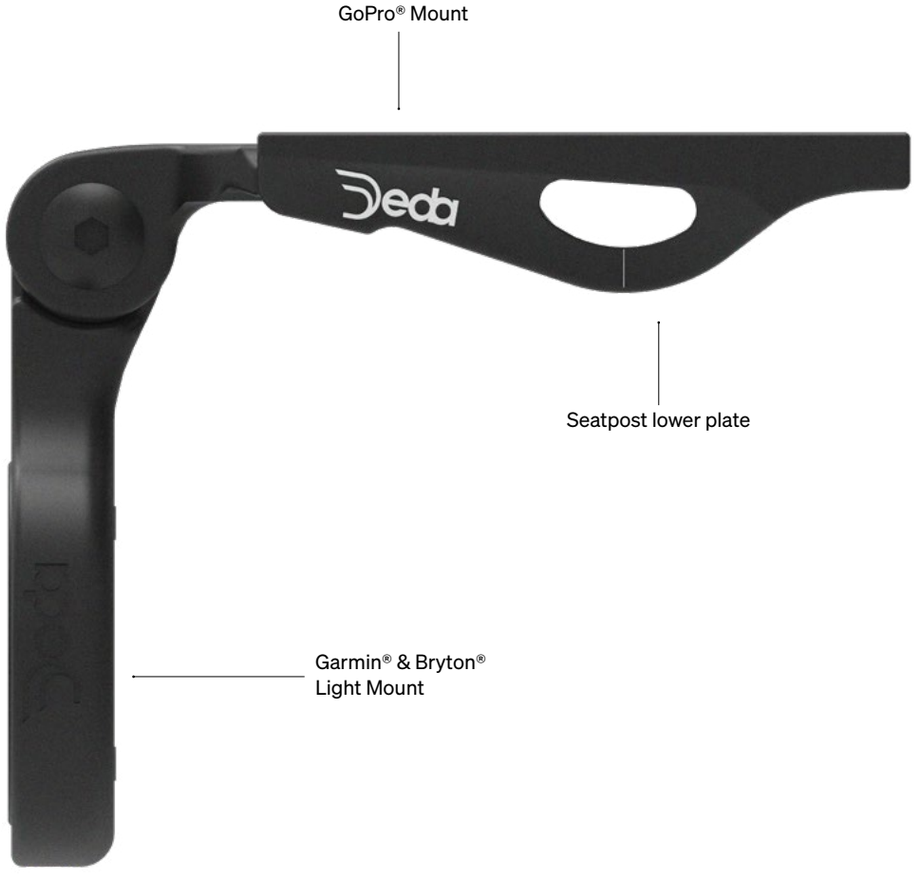

Garmin®Varia

Bryton® Gardia

IT • Staffa è il kit montaggio per la luce posteriore progettato per integrarsi perfettamente con i reggisella Deda (ad eccezione del mod. Zero). Il kit può essere utilizzato con una luce posteriore tipo radar (come Garmin® Varia e Bryton® Gardia) o con una luce a dinamo utilizzando l'aggancio GoPro®. Permette l'integrazione del cavo elettrico della luce a dinamo o luce per e-bike con un reggisella Superzero & Zero100.

Modelli compatibili:
• Garmin® Varia RTL515 e Varia RVR315
(Non compatibile con Garmin® Varia RCT715)
• Bryton® Gardia R300L
• Magene® L508
• Magicshine® Seemee 508
• iGPSPORT SR30

EN • Staffa is a mount kit for rear light designed to be perfectly integrated with Deda seatposts (exept for Zero model). The mount kit can be used with a rear radar light such as Garmin® Varia and Bryton® Gardia or with a dynamo light using the GoPro® mount. It allows the electric cable integration for dynamo or e-bike with a Superzero & Zero100 seatpost.

Compatible models:
• Garmin® Varia RTL515 e Varia RVR315
(Not compatible with Garmin® Varia RCT715)
• Bryton® Gardia R300L
• Magene® L508
• Magicshine® Seemee 508
• iGPSPORT SR30

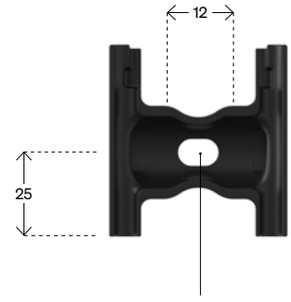

Foro uscita cavo elettrico luce dynamo (Ø 8 mm)
Exit hole for dynamo rear light (Ø 8 mm)

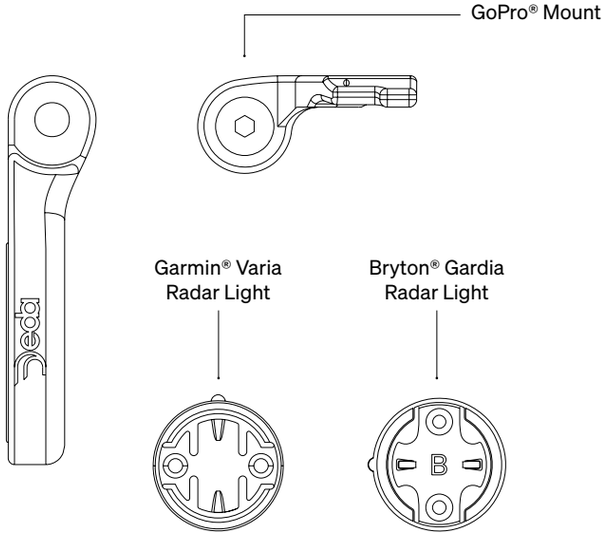

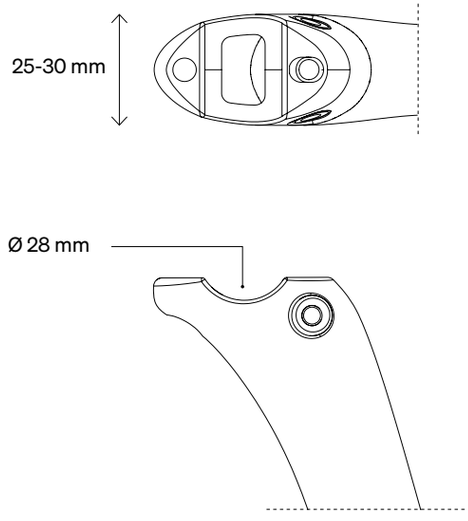

Materiale:
• Culla inferiore in alluminio
• Attacco tipo GoPro® in nylon
• Attacco per luce Garmin® & Bryton® in nylon
Compatibilità reggisella:
Superleggero, Superzero, Zero100,
Zero2, Zero1, Cross, Peak
Finitura: Black
Peso: 45 g set
Note: Reggisella Superleggero, Zero2, Zero1, Cross,
Peak compatibile con luci a batteria (attacco tipo Garmin® o Bryton®).
Reggisella Superzero & Zero100 compatibile con luci a batteria
e a dinamo (passaggio cavo elettrico interno nel reggisella).
Staffa può essere compatibile anche con reggisella di altri produttori,
a patto che il morsetto inferiore sia di tipo "culla" con la sede
di diametro 28 mm e larghezza da 25 a 30 mm.

Material:
• Alloy lower plate
• Nylon GoPro® mount
• Nylon Garmin® & Bryton® rear light mount
Seatpost compatibility:
Superleggero, Superzero, Zero100,
Zero2, Zero1, Cross, Peak
Finish: Black
Weight: 45 g set
Notes: Superleggero, Zero2, Zero1, Cross, Peak seatposts
compatible with battery light only (mount for Garmin® or Bryton®).
Superzero & Zero100 seatpost compatible with battery e dynamo
light (seatpost internal cable routing).
Staffa can be also compatible with seatposts from
other brands featuring a 28 mm diameter and 25-30 mm
width of the lower clamp seat.

↓ Description	↓ Deda Part Code	↓ EAN13 Code
STAFFA MOUNT KIT for rear light , Garmin® Varia, Bryton® Garda & GoPro®	STAFFAKIT	8055774364225

DBA

Ø 27,2 mm Ø 31,6 mm

IT • L'adattatore reggisella Deda DBA (Deda battery adapter) offre un sistema pratico e leggero per le batterie interne Shimano™ Di2 o Campagnolo™ EPS. Il sistema di fissaggio all'interno del tubo reggisella permette una sicura installazione della batteria nel tempo.

Materiale:
Gomma termoplastica
Diametro:
28,6 • 31,6 mm
Lunghezza:
70 mm
Colore:
Nero
Peso:
14 g

EN • The Deda Battery Adapter (DBA) for seatpost offers an handy and light system for new generation of Shimano™ Di2 internal batteries. The adapter fixing system inside the seatpost tube allows a safe battery installation.

Material:
Thermo-plastic rubber
Diameter:
28,6 • 31,6 mm
Size:
70 mm
Colours:
Nero
Weight:
14 g

Dog Fang

IT • Dog fang è un classico salvacatena. Questo componente è presente su tutte le bici dei corridori professionisti, in quanto evita la caduta della catena in caso di deragliate brusche ed improvvise.

Materiale:
Termoplastico
Diametro:
28,6 • 31,6 • 35,0 mm
Colore:
Nero
Peso:
18 g

EN • Dog fang is a classic chain protector. Mounted on every professional bike, this component keeps the chain from falling in case of an over-shift.

Material:
Thermo-plastic
Diameter:
28,6 • 31,6 • 35,0 mm
Colours:
Black
Weight:
18 g

D-Clip

IT • La D-clip è un inserto in nylon specifico per l'attacco Superzero e Superbox. La clip è un accessorio integrato che ne migliora l'aerodinamica e l'estetica dell'attacco. Realizzato in materiale termoplastico.

Materiale:
Termoplastico
Ø Manubrio:
31,7 mm
Finitura:
Nero
Peso:
5 g
Note:
Incluso con tutti gli attacchi Superzero e Superbox.

EN • The D-clip is a nylon insert specific for Superzero and Superbox stem. The clip is intended to be used as colored accessory for an improved stem aerodynamics. Made in thermoplastic material.

Material:
Thermo-plastic
Ø Handlebar:
31,7 mm
Finish:
Black
Weight:
5 g
Notes:
Included with all superzero and superbox stems.

↓ Description	↓ Deda Part Code	↓ EAN13 Code
INTERNAL BATTERY ADAPTER, for seatpost Ø 27.2, length 70 mm, rubber	DI2BATAD27	8051406520380
INTERNAL BATTERY ADAPTE, for seatpost Ø 31.6, length 70 mm, rubber	DI2BATAD31	8051406522087
DOG FANG, chain catcher, for seat tube Ø 31.6	DOG FANG	8051406523244
DOG FANG, chain catcher, for seat tube Ø 28.6	DOG FANG 28	8051406523251
DOG FANG, chain catcher, for seat tube Ø 35.0	DOG FANG 35	8051406523268
D-CLIP stem Superzero & Superbox, nylon, black	DCLIPBLACK	8059265684014

T-Shirt *Celebrating Cycling*

↓ White

↓ Blue Navy

IT • Nuova versione “Celebrating Cycling” della t-shirt Deda: celebra la passione per la bici con stile e semplicità. Questa nuova t-shirt unisce design essenziale e comfort superiore, pensata per chi vive il ciclismo non solo come sport, ma come parte del proprio stile di vita. Realizzata in 100% cotone ring spun, offre una vestibilità morbida, naturale e allo stesso tempo resistente, perfetta per accompagnarti ogni giorno, sia in sella che nel tempo libero.

EN • New “Celebrating Cycling” edition of the Deda t-shirt: celebrate your passion for cycling with style and simplicity. This new t-shirt combines essential design with superior comfort, created for those who see cycling not just as a sport, but as a true lifestyle. Made from 100% ring-spun cotton, it offers a soft, natural fit that’s also durable, perfect for everyday wear, whether you're on the bike or off.

Materiale:
100% cotone
Misure:
S • M • L • XL
Colore:
Bianco, Blue Navy

Material:
100% cotton
Sizes:
S • M • L • XL
Colours:
White, Blue Navy

↓ Description	↓ Deda Part Code	↓ EAN13 Code
T-SHIRT Deda, white, size S, 100% cotton	TSHIRT-1-S	8059493280378
T-SHIRT Deda, white, size M, 100% cotton	TSHIRT-1-M	8059493280385
T-SHIRT Deda, white, size L, 100% cotton	TSHIRT-1-L	8059493280392
T-SHIRT Deda, white, size XL, 100% cotton	TSHIRT-1-XL	8059493280408
T-SHIRT Deda, blue, size S, 100% cotton	TSHIRT-2-S	8059493280422
T-SHIRT Deda, blue, size M, 100% cotton	TSHIRT-2-M	8059493280446
T-SHIRT Deda, blue, size L, 100% cotton	TSHIRT-2-L	8059493280415
T-SHIRT Deda, blue, size XL, 100% cotton	TSHIRT-2-XL	8059493280439

Specifiche tecniche e parti di ricambio
Technical chart and spare parts

Curve/Handlebars 247

Attacchi/Stems 248

Reggisella/Seatpost 248

CRONO, PISTA, MTB 249

Ruote/Wheels 250

Ricambi ruote mozzo RS/ RS hub wheels spare parts 251

Ricambi ruote mozzo Allroad/ Allroad hub wheels spare parts 252

Ricambi mozzo ruota HERO RS/ HERO RS wheel hub spare parts 253

Ricambi ruote freni tradizionali/ Spare parts rim brake wheels 254

Ricambi ruote freni a disco/ Spare parts disc brake wheels 255

Ricambi/Spare parts
- Alanera RS 256
- Superbox V2 257
- Vinci 258

Serie Sterzo DCR & S-DCR/ Headset DCR & S-DCR 259

Serie Sterzo: IN-4 & IN-5 Headset: IN-4 & IN-5 260

Serie Sterzo: Classic1 & Classic2 Headset: Classic1 & Classic2 261

Ricambi/Spare Parts
- Attacchi/Stems 262
- Reggisella/Seatpost 263
- TT314® 266
- JET2 EVO 267
- JET2 HYDRO 268
- JET2 to JET1 conversion spacer kit 269
- Fast Pro 270
- Parabolica Pro 271
- Cronoevo 272
- Parabolica 272
- Fastblack2 272
- Superzero TT 272
- Carbon Blast 273
- Metal Blast 273
- Forcelle Gera/Gera Forks 274
- Staffa 276

Informazioni tecniche Manubri & Attacchi/ Handlebars & Stems Technical Information 246

Deda tubeless wheels. Compatibilità pneumatico/ Deda tubeless wheels. Tire compatibility 247

CURVE HANDLEBARS

Articolo **Item**	**Misure** cm **Sizes** cm	**Diametro** mm **Diameter** mm	**Peso** g **Weight** g	**Finitura** **Finish**	**Materiale** **Material**	**Forma** **Shape**	**Profondità** mm **Reach** mm	**Altezza** mm **Drop** mm	**Apertura** Angolo **Flare** Angle	**Angolo esterno** **Outsweep**
Alanera RS	38 (80 → 140 mm) 40 (80 → 140 mm) 42 (80 → 140 mm) 44 (80 → 140 mm)	31,75	340 (size 110×42)	Carbon UD matt	Carbon fiber	RHM-EVO	75	120	-	-
Vinci	40 • 42 • 44 • 46	31,75	225 (size 42)	Carbon UD matt	Carbon fiber	RHM	75	130	-	-
Vinci Shallow	40 • 42 • 44	31,75	226 (size 42)	Carbon UD matt	Carbon fiber	Super Shallow	75	125	-	-
Superleggera RS	42 • 44 • 46	31,75	180 (size 42)	Carbon UD matt	Carbon fiber	RHM	75	130	-	-
Superleggera	42 • 44 • 46	31,75	185 (size 42)	Carbon UD matt	Carbon fiber	RHM	75	130	-	-
Superzero RS Carbon	40 • 42 • 44 • 46	31,75	215 (size 42)	Carbon UD	Carbon fiber	RHM-EVO	75	120	-	-
Superzero RS Alloy	36 • 38 • 40 • 42 • 44	31,75	285 (size 42)	Black anodized	Alloy 7050	RHM	75	120	6°	-
Superzero Alloy	40 • 42 • 44 • 46	31,75	305 (size 42)	Black anodized	Alloy 7050	RHM	75	130	-	-
Superzero Gravel Carbon	42 • 44 • 46	31,75	235 (size 44)	Carbon UD matt	Carbon fiber	EOS-Speed	60	110	16°	-
Superzero Gravel Alloy	40 • 42 • 44 • 46	31,75	320 (size 42)	Black anodized	Alloy 6061	RHM-EVO	75	120	16°	-
Gera Carbon	44 - 46 - 48	31,75	220 (size 44)	Carbon UD matt	Carbon fiber	EOS-Endurance	40	100	-	16°
Gera Alloy	42 • 44 • 46 - 48	31,75	310 (size 42)	Black anodized	Alloy 6061	EOS-Endurance	55	100	24°	3°
Gravel100	40 • 42 • 44 • 46	31,75	248 (size 42)	Black anodized	Alloy 7050	RHM	75	130	12°	2°
Gravel100 OEM	40 • 42 • 44 • 46	31,75	300 (size 42)	Black anodized	Alloy 6061	RHM	75	130	12°	2°
Zero100	38 • 40 • 42 • 44 • 46	31,75	248 (size 42)	Black anodized	Alloy 7050	RHM	75	130	-	-
Zero100 Deep	42 • 44 • 46	31,75	254 (size 42)	Black anodized	Alloy 7075	Deep	90	145	-	-
Zero100 Shallow	40 • 42 • 44 • 46	31,75	258 (size 42)	Black anodized	Alloy 7075	Anatomic	80	135	-	-
Zero100 Anatomic	42 • 44 • 46	31,75	252 (size 42)	Black anodized	Alloy 7075	Shallow	86	142	-	-
Zero2	42 • 44 • 46	31,75	295 (size 42)	Black anodized	Alloy 6061	RHM	75	130	-	-
Zero2 DCR	36 • 38 • 40 • 42 • 44 • 46	31,75	330 (size 42)	Polish on black	Alloy 6061	RHM-EVO	75	120	-	-
Zero1	38 • 40 • 42 • 44 • 46	31,75	304 (size 42)	Black anodized	Alloy 6061	RHM	75	130	-	-
Zero	42 • 44 • 46	31,75	312 (size 42)	Black anodized	Alloy 6061	RHM	75	130	-	-
Speciale 26	42 • 44 • 46	26	320 (size 42)	Silver polish	Alloy 6061	Shallow	80	135	-	-
Piega	38 • 40 • 42 • 44 • 46	26	280 (size 42)	Black anodized	Alloy 6061	RHM	75	130	-	-
Dritto	50	31,75	190	Black anodized	Alloy 6061	-	-	-	-	-

ATTACCHI STEMS

Articolo **Item**	**Misure** mm **Sizes** mm	**Diametro manubrio** mm **Handlebar diameter** mm	**Diametro Forcella** **Fork Diameter**	**Peso (g)** **Weight (g)**	**Finitura** **Finish**	**Materiale** **Material**	**Altezza attacco** mm **Clamp Height** mm	**Angolo** **Angle**
Superleggero RS	90 • 100 • 110 • 120 • 130	31,75	1 1/8” (28,86 mm)	100 (110 mm)	Duracer (ceramic coating)	Alloy 7050	36	82°
Superleggero	80 • 90 • 100 • 110 • 120 • 130 • 140	31,75	1 1/8” (28,86 mm)	110 (110 mm)	Black anodized	Alloy 7050	36	82°
Vinci	90 • 100 • 110 • 120 • 130 • 140	31,75	1 1/4” (31,75 mm) with adapter to 1 1/8”	210 (110 mm)	Black anodized	Alloy 2014	40	73°
Superbox V2	60 • 70 • 80 • 90 • 100 • 110 • 120 • 130 • 140 • 150 • 160	31,75	1 1/8” (28,86 mm)	175 (110 mm)	Black anodized	Alloy 2014	32 (47 mm with topcover)	82°
Superzero RS	90 • 100 • 110 • 120 • 130	31,75	1 1/8” (28,86 mm)	140 (110 mm)	Black anodized	Alloy 2014	40	82°
Superzero	90 • 100 • 110 • 120 • 130 • 140	31,75	1 1/8” (28,86 mm)	145 (110 mm)	Black anodized	Alloy 2014	40	82°
Zero100	80 • 90 • 100 • 110 • 120 • 130 • 140	31,75	1 1/8” (28,86 mm)	125 (110 mm)	Black anodized	Alloy 2014	40	82°
Zero2	50 • 60 • 70 • 80 • 90 • 100 • 110 • 120 • 130	31,75	1 1/8” (28,86 mm)	140 (110 mm)	Black anodized	Alloy 6061	38	83°
Zero1	70 • 80 • 90 • 100 • 110 • 120 • 130	31,75	1 1/8” (28,86 mm)	145 (110 mm)	Black anodized	Alloy 6061	41,5	82°
Zero	70 • 80 • 90 • 100 • 110 • 120	31,75	1 1/8” (28,86 mm)	145 (110 mm)	Black anodized	Alloy 6061	40	83°
ADJ	90 • 110	31,75	1 1/8” (28,86 mm)	260 (110 mm)	Black anodized	Alloy 6061	40	+ 30° / - 40°
Murex	80 • 100 • 120	26	1” (25,4 mm)	310 (110 mm)	Silver polish	Alloy 6061	-	73°
Logo	60 • 80 • 100 • 120	26	1 1/8” (28,86 mm)	178 (110 mm)	Black anodized	Alloy 6061	42	80° (+/- 10°)

REGGISELLA SEATPOST

Articolo **Item**	**Lunghezze** mm **Length** mm	**Diametro** mm **Diameter** mm	**Peso** g **Weight** g	**Finitura** **Finish**	**Materiale** **Material**	**Arretramento** mm **Setback** mm	
RS 25 mm	350 • 400	31,6 • 27,2	195 (size 31,6)	Carbon UD	Carbon fiber	25	
RS 25 mm OEM	350	31,6 • 27,2	205 (size 31,6)	Carbon UD	Carbon fiber	25	
RS 12 mm	350 • 400	27,2	175 (size 27.2)	Carbon UD	Carbon fiber	12	
RS 12 mm OEM	350 • 400	27,2	205 (size 27.2)	Carbon UD	Carbon fiber	12	
RS 0 mm	350 • 400	31,6 • 27,2	195 (size 31,6)	Carbon UD	Carbon fiber	0	
RS 0 mm OEM	350 • 400	27,2	205 (size 27,2)	Carbon UD	Carbon fiber	0	
Zero100	350	31,6 • 27,2	229 (size 31,6)	Black anodized	Alloy 7050	12	
Zero100 0 mm	350	31,6 • 27,2	259 (size 31,6)	Black anodized	Alloy 2014	0	
Zero2	350	31,6 • 27,2	285 (size 31,6)	Black anodized	Alloy 2014	21	
Zero1	350	31,6 • 27,2	295 (size 31,6)	Black anodized	Alloy 6061	20	
Zero	350	31,6 • 27,2	277 (size 31,6)	Black anodized	Alloy 6061	18	
RS01	350	27,2	333 (size 31,6)	Silver polish	Alloy 6061	21	

CRONO CHRONO

Articolo **Item**	**Prodotto** **Product**	**Misure** cm **Sizes** cm	**Diametro** mm **Diameter** mm	**Peso** g **Weight** g	**Finitura** **Finish**	**Materiale** **Material**	**Lunghezza estensioni** mm **Extensions lenght** mm
JET 2 Evo	TT Clip-on	-	-	330 (Size S)	Carbon UD	Carbon Fiber	S (340) • M (370)
JET2 Hydro	TT Clip-on	-	-	720 (Size S)	Black anodized	Dedacciai V107 hydroformed	S (315) • M (345)
Fast Pro	TT Clip-on	-	31,75	920	Carbon UD	Carbon fiber	410
Parabolica Pro	TT Clip-on	-	31,75	910	Black anodized	Alloy 6061	385
Cronoevo	TT H/B	42	31,75	650	Black anodized	Alloy 6061	370
Tribar	TT H/B	42	31,75	210	Carbon Ud	Carbon Fiber	-
Superzero TT	TT Clip-on	-	31,75	330	Black anodized	Alloy 6061	190
Carbon Blast	TT Clip-on	-	31,75	226	Carbon Ud	Carbon Fiber	135
Metal Blast	TT Clip-on	-	31,75	266	Black anodized	Alloy 6061	165
Parabolica uno	TT Clip-on	-	31,75 • 35,0	350	Black anodized	Alloy 6061	350
Parabolica due	TT Clip-on	-	31,75	300	Black anodized	Alloy 6061	300

PISTA PISTA

Articolo **Item**	**Prodotto** **Product**	**Misure** **Sizes**	**Diametro** mm **Diameter** mm	**Peso** g **Weight** g	**Finitura** **Finish**	**Materiale** **Material**	**Profondità** mm **Reach** mm	**Altezza** mm **Drop** mm	**Altezza attacco** mm **Clamp Height** mm	**Angolo** **Angle**
Omnium	Handlebar	42 cm	31,75	365	Carbon UD matt	Carbon Fiber	105	120	-	-
Pista	Handlebar	42 cm	31,75	279 (size 42)	Black anodized	Alloy 6061	109	173	-	-
Dabar	Handlebar	42 cm	31,75	210	Carbon UD	Carbon Fiber	-	-	-	-
Crononero	Handlebar	40 • 42 • 44 cm	31,75	279 (size 42)	Black anodized	Alloy 6061	-	-	-	-
Crononero Low Rider	Handlebar	40 • 42 • 44 cm	31,75	279 (size 42)	Black anodized	Alloy 6061	-	-	-	-

MTB MTB

Prodotto **Product**	**Articolo** **Item**	**Misure** cm **Sizes** cm	**Diametro manubrio** mm **Handlebar diameter** mm	**Peso** g **Weight** g	**Finitura** **Finish**	**Materiale** **Material**	**Rialzo** **Rise**	**A° Rialzo** **Up Sweep**	**Arretramento** **Back sweep**
Manubrio/Handlebar	Cross	750	31,75	170	Carbon UD matt	Carbon fiber	0 mm	0°	3°
Manubrio/Handlebar	Peak Flat	780	31,75	315	Black anodized	Alloy 6061	0 mm	0°	3°
Manubrio/Handlebar	Peak Riser	780	31,75	345	Black anodized	Alloy 6061	20 mm	9°	5°

Prodotto **Product**	**Articolo** **Item**	**Misure** cm **Sizes** cm	**Diametro manubrio** mm **Handlebar diameter** mm	**Diametro Forcella** **Fork Diameter**	**Peso** g **Weight** g	**Finitura** **Finish**	**Materiale** **Material**	**Altezza attacco** mm **Clamp Height** mm	**Angolo** **Angle**
Attacco/Stem	Cross	80 - 90 - 100 - 110	31,75	1 1/8" (28,86 mm)	109 (110 mm)	Black anodized	Alloy 2014	38	84°
Attacco/Stem	Cross	60 - 70 - 80 - 90	31,75	1 1/8" (28,86 mm)	150 (110 mm)	Black anodized	Alloy 6061	35	70°
Attacco/Stem	Peak	50 - 60 - 70 - 80 - 90 - 100 - 110	31,75	1 1/8" (28,86 mm)	140 (110 mm)	Black anodized	Alloy 6061	38	84°

Prodotto **Product**	**Articolo** **Item**	**Lunghezze** mm **Length** mm	**Diametro** mm **Diameter** mm	**Peso** g **Weight** g	**Finitura** **Finish**	**Materiale** **Material**	**Arretramento** mm **Setback** mm	
Reggisella/Seatpost	Cross	400	31,6 - 27,2	180 (size 31,6)	Carbon Ud	Carbon Fiber	25	
Reggisella/Seatpost	Cross 0 mm	400	31,6 - 30,9 - 27,2	240 (size 31,6)	Carbon Ud	Carbon Fiber	0	
Reggisella/Seatpost	Peak	400	31,6 - 30,9 - 27,2	295 (size 31,6)	Black anodized	Alloy 6061	20	

RUOTE WHEELS

	Cerchio Rim					**Mozzi** Hub		**Raggi** Spokes			**Nippli** Nipples	**Compatibilità** Compatibility		
Articolo	**Tipo**	**Tipo Freni**	**Misura**	**Altezza**	**Larghezza**	**Anteriore**	**Posteriore**	**Ruota Anteriore**	**Ruota Posteriore**	**Tipo**	**Tipo**	**Cassetta**	**Pneumatico** Tire	
Product	**Type**	**Brakes Type**	**Size**	**Height** mm	**Width** mm	**Front** mm	**Rear** mm	**Front Wheel**	**Rear Wheel**	**Type**	**Type**	**Cassette**	**TIPO - Type**	**Misura** Size
RS4	Carbon Clincher	Disc Brake	622 × 19C	38	26	Through Axle 12 × 100	Through Axle 12 × 142	24	24	Aero Steel, Straight Pull	Internal; 14G 10 mm, Hexa Head	• 10S, 11S, 12S Shimano • 12S Sram XDR • 10S, 11S, 12S Campy • 13S Campy N3W	Clincher & Tubeless Ready	700 × 25 ≈ 40
RS3	Alloy Clincher	Disc Brake	622 × 19C	30	23	Through Axle 12 × 100	Through Axle 12 × 142	24	24	Aero Steel, Straight Pull	External; 14G 15 mm, Hexa Head	• 10S, 11S, 12S Shimano • 12S Sram XDR • 10S, 11S, 12S Campy • 13S Campy N3W	Clincher & Tubeless Ready	700 × 25 ≈ 40
SL7	Carbon Clincher	Disc Brake	622 × 23C	70	28	Through Axle 12 × 100	Through Axle 12 × 142	24	24	Aero Steel, Straight Pull	External; 14G 15 mm, Hexa Head	• 10S, 11S, 12S Shimano • 12S Sram XDR • 10S, 11S, 12S Campy • 13S Campy N3W	Clincher & Tubeless Ready	700 × 28 ≈ 46
SL5	Carbon Clincher	Disc Brake	622 × 23C	50	28	Through Axle 12 × 100	Through Axle 12 × 142	24	24	Aero Steel, Straight Pull	External; 14G 15 mm, Hexa Head	• 10S, 11S, 12S Shimano • 12S Sram XDR • 10S, 11S, 12S Campy • 13S Campy N3W	Clincher & Tubeless Ready	700 × 28 ≈ 46
SL3	Carbon Tubular	Disc Brake	632 × 26	30	26	Through Axle 12 × 100	Through Axle 12 × 142	24	24	Aero Steel, Straight Pull	External; 14G 15 mm, Hexa Head	• 10S, 11S, 12S Shimano • 12S Sram XDR • 10S, 11S, 12S Campy • 13S Campy N3W	Tubular	700 × 25 ≈ 32
Gera Carbon	Carbon Clincher	Disc Brake	622 × 23C	32	29	Through Axle 12 × 100	Through Axle 12 × 142	24	24	Aero Steel, Straight Pull	External; 14G 15 mm, Hexa Head	• 10S, 11S, 12S Shimano • 12S Sram XDR • 10S, 11S, 12S Campy • 13S Campy N3W	Clincher & Tubeless Ready	700 × 28 ≈ 57
Gera Alloy	Carbon Clincher	Disc Brake	622 × 23C	25	28	Through Axle 12 × 100	Through Axle 12 × 142	24	24	Aero Steel, Straight Pull	External; 14G 15 mm, Hexa Head	• 10S, 11S, 12S Shimano • 12S Sram XDR • 10S, 11S, 12S Campy • 13S Campy N3W	Clincher & Tubeless Ready	700 × 28 ≈ 57

Ricambi ruote mozzo RS RS hub wheels spare parts

Product	RS4	RS3	SL6	SL4	SL3	
Front Wheel Spoke	WDSP290 • 290 mm	WDSP292 • 292 mm	WDSP261 • 261 mm	WDSP276 • 276 mm	WDSP285 • 285 mm	
Rear Wheel Spoke DS	WDSP289 • 289 mm	WDSP290 • 290 mm	WDSP259 • 259 mm	WDSP275 • 275 mm	WDSP282 • 282 mm	
Rear Wheel Spoke NDS	WDSP291 • 291 mm	WDSP293 • 293 mm	WDSP261 • 261 mm	WDSP278 • 278 mm	WDSP287 • 287 mm	
Nipples	WDN10HEXA • 10 mm	WDN15ABSB • 15 mm	WDN15ABSB • 15 mm	WDN15ABSB • 15 mm	WDN15ABSB • 15mm	
Shimano Freehub 11sp	WD17RSDB	WD17RSDB	WD17RSDB	WD17RSDB	WD17RSDB	
Campy FreeHub Super Record MY24 & Ekar	WD18RSDB-N3W	WD18RSDB-N3W	WD18RSDB-N3W	WD18RSDB-N3W	WD18RSDB-N3W	
Sram FreeHub XDR 12sp	WD17XRSDB-XDR	WD17XRSDB-XDR	WD17XRSDB-XDR	WD17XRSDB-XDR	WD17XRSDB-XDR	
Front Hub Alloy Sleeve	WD90RSDB	WD90RSDB	WD90RSDB	WD90RSDB	WD90RSDB	
Rear Hub Axle	WD70RSDB	WD70RSDB	WD70RSDB	WD70RSDB	WD70RSDB	
Front Hub LEFT End-Cap	WD73RSDB12-L (Ø 12 mm)	WD73RSDB12-L (Ø 12 mm)	WD73RSDB12-L (Ø 12 mm)	WD73RSDB12-L (Ø 12 mm)	WD73RSDB12-L (Ø 12 mm)	
Front Hub RIGHT End-Cap	WD73RSDB12-R (Ø 12 mm)	WD73RSDB12-R (Ø 12 mm)	WD73RSDB12-R (Ø 12 mm)	WD73RSDB12-R (Ø 12 mm)	WD73RSDB12-R (Ø 12 mm)	
Rear Hub LEFT End-Cap	WD74RSDB (Ø 12 mm)	WD74RSDB (Ø 12 mm)	WD74RSDB (Ø 12 mm)	WD74RSDB (Ø 12 mm)	WD74RSDB (Ø 12 mm)	
Rear Hub RIGHT End-Cap	WD75RSDB WD75RSDBN3W(Ø 12 mm)	WD75RSDB WD75RSDBN3W (Ø 12 mm)	WD75RSDB WD75RSDBN3W(Ø 12 mm)	WD75RSDB WD75RSDBN3W(Ø 12 mm)	WD75RSDB WD75RSDBN3W (Ø 12 mm)	
Bearing Front Hub	WD72CRSDB • 26×17×5 • Ceramic	WD72RSDB • 26×17×5 • Steel	WD72RSDB • 26×17×5 • Steel	WD72RSDB • 26×17×5 • Steel	WD72RSDB • 26×17×5 • Steel	
Bearing Rear Hub DS	WD71CRSDB-R • 28×15×7 • Ceramic	WD71RSDB-R • 28×15×7 • Steel	WD71RSDB-R • 28×15×7 • Steel	WD71RSDB-R • 28×15×7 • Steel	WD71RSDB-R • 28×15×7 • Steel	
Bearing Rear Hub NDS	WD71CRSDB-L • 24×15×5 • Ceramic	WD71RSDB-L • 24×15×5 • Steel	WD71RSDB-L • 24×15×5 • Steel	WD71RSDB-L • 24×15×5 • Steel	WD71RSDB-L • 24×15×5 • Steel	
Tubeless Rim Tape	WDT25 25 mm	WDT25 25 mm	WDT25 25 mm	WDT25 25 mm	-	
Front Wheel Spoke Tension	100 kgf	100 kgf	100 kgf	100 kgf	100 kgf	
Rear Wheel Spoke Tension	120 kgf DS • 80 kgf NDS	120 kgf DS • 80 kgf NDS	120 kgf DS • 80 kgf NDS	120 kgf DS • 80 kgf NDS	120 kgf DS • 80 kgf NDS	

DS = Lato Cassetta / Drive Side
NDS = Lato Opposto Cassetta / Non Drive Side

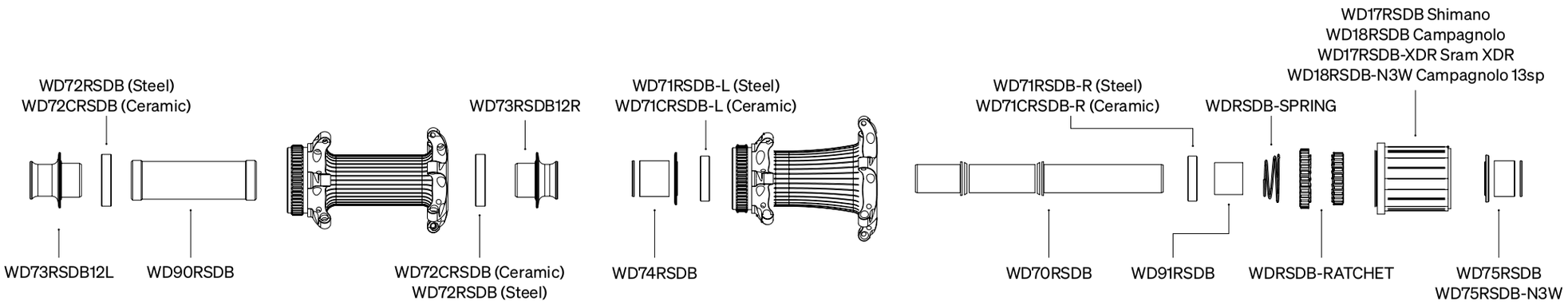

Ricambi ruote mozzo Allroad Allroad hub wheels spare parts

Product	SL7	SL5
Front Wheel Spoke	WDSP252 • 252 mm	WDSP273 • 273 mm
Rear Wheel Spoke DS	WDSP251 • 251 mm	WDSP272 • 272 mm
Rear Wheel Spoke NDS	WDSP254 • 254 mm	WDSP275 • 275 mm
Nipples	WDN15ABSB • 15 mm	WDN15ABSB • 15 mm
Shimano Freehub 11sp	WD17RSDB	WD17RSDB
Campy FreeHub Super Record MY24 & Ekar	WD18RSDB-N3W	WD18RSDB-N3W
Sram FreeHub XDR 12sp	WD17XRSDB-XDR	WD17XRSDB-XDR
Front Hub Alloy Sleeve	WD90RSDB	WD90RSDB
Rear Hub Axle	WD70RSDB	WD70RSDB
Front Hub LEFT End-Cap	WD73RSDB12-L (Ø 12 mm)	WD73RSDB12-L (Ø 12 mm)
Front Hub RIGHT End-Cap	WD73RSDB12-R (Ø 12 mm)	WD73RSDB12-R (Ø 12 mm)
Rear Hub LEFT End-Cap	WD74RSDB (Ø 12 mm)	WD74RSDB (Ø 12 mm)
Rear Hub RIGHT End-Cap	WD75RSDB WD75RSDBN3W (Ø 12 mm)	WD75RSDB WD75RSDBN3W (Ø 12 mm)
Bearing Front Hub	WD72RSDB • 26×17×5 • Steel	WD72RSDB • 26×17×5 • Steel
Bearing Rear Hub DS	WD71RSDB-R • 28×15×7 • Steel	WD71RSDB-R • 28×15×7 • Steel
Bearing Rear Hub NDS	WD71RSDB-L • 24×15×5 • Steel	WD71RSDB-L • 24×15×5 • Steel
Tubeless Rim Tape	WDT25 25 mm	WDT25 25 mm
Front Wheel Spoke Tension	100 kgf	100 kgf
Rear Wheel Spoke Tension	120 kgf DS • 80 kgf NDS	120 kgf DS • 80 kgf NDS

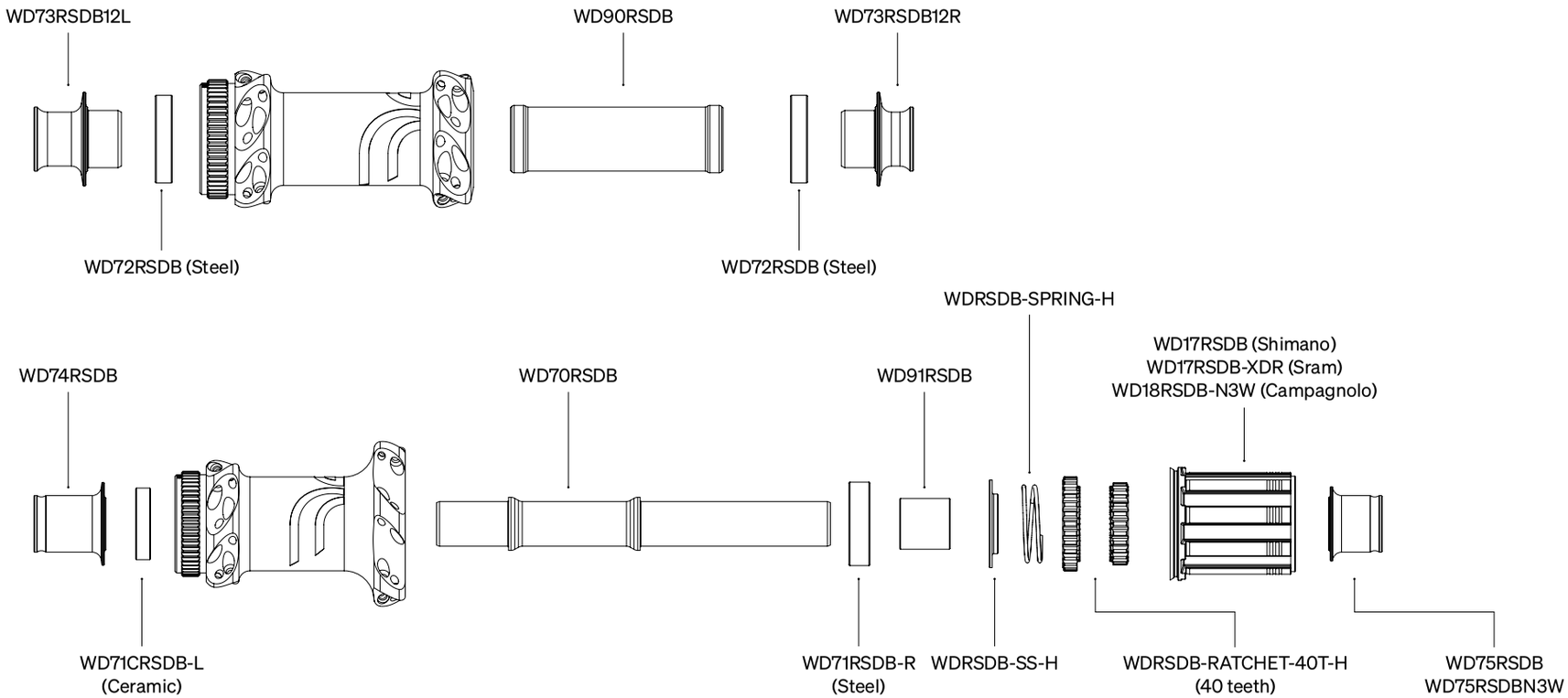

Ricambi mozzo ruota Hero RS Hero RS wheel hub spare parts

Product	HERO RS
Front Wheel Spoke	-
Rear Wheel Spoke DS	-
Rear Wheel Spoke NDS	-
Nipples	-
Shimano Freehub 11sp	WD17RSDB-H-SHI
Campy FreeHub Super Record MY24 & Ekar	WD18RSDB-H-N3W
Sram FreeHub XDR 12sp	WD17RSDB-H-XDR
Front Hub Alloy Sleeve	-
Rear Hub Axle	WD70RSDB-H
Front Hub LEFT End-Cap	-
Front Hub RIGHT End-Cap	-
Rear Hub LEFT End-Cap	WD74RSDB (Ø 12 mm)
Rear Hub RIGHT End-Cap	WD75RSDB WD75RSDBN3W (Ø 12 mm)
Bearing Front Hub	-
Bearing Rear Hub DS	WD71CRSDB-L • 24×15×5 • Ceramic
Bearing Rear Hub NDS	WD71CRSDB-L • 24×15×5 • Ceramic
Tubeless Rim Tape	WDT25 25 mm
Front Wheel Spoke Tension	-
Rear Wheel Spoke Tension	-

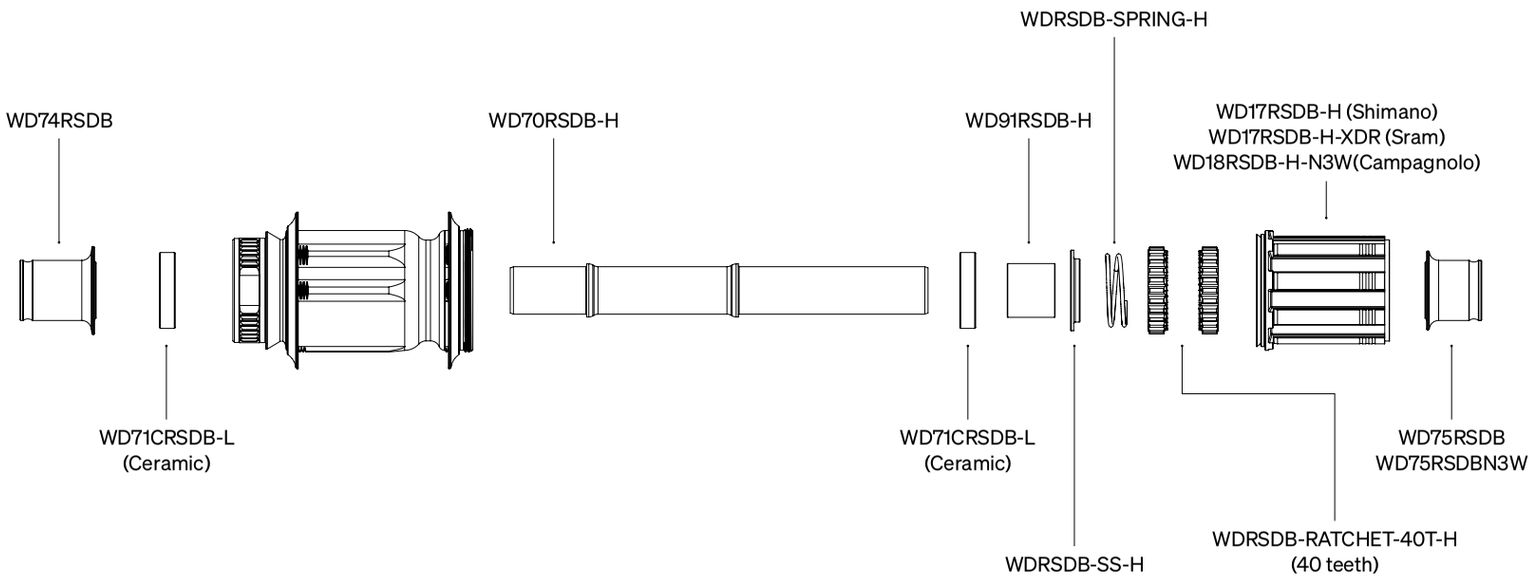

Ricambi ruote freni tradizionali Spare Parts rim brake wheels

Product	Front Wheel Spoke	Rear Wheel Spoke DS	Rear Wheel Spoke NDS	Nipples	Shimano Freehub 11sp	Campy FreeHub 12sp	Sram FreeHub XDR 12sp	Front Hub Axle	Rear Hub Axle	Front Hub End-Cap	Rear Hub End-Cap NDS	Bearing Front Hub	Bearing Rear Hub	Front Hub Alloy Sleeve	Rear Hub Alloy Sleeve	Tubeless Rim Tape	Front Wheel Spoke Tension	Rear Wheel Spoke Tension
SL62	WDSP248 248mm	WDSP261 261mm	WDSP248 248mm	WDN15ABSB 15mm	WD17N	WD18N	WD17XDRSL	WD69N 15x90mm	WD70N 15x129mm	WD73N	WD74N	WD71C 24x15x5mm	WD72C 28x15x7mm	WD90	WD91	WDT21 21mm	100kgf	120kgf DS 80kgf NDS
SL48	WDSP261 261mm	WDSP275 275mm	WDSP262 262mm	WDN15ABSB 15mm	WD17N	WD18N	WD17XDRSL	WD69N 15x90mm	WD70N 15x129mm	WD73N	WD74N	WD71C 24x15x5mm	WD72C 28x15x7mm	WD90	WD91	WDT21 21mm	100kgf	120kgf DS 80kgf NDS

DS = Lato Cassetta / Drive Side
NDS = Lato Opposto Cassetta / Non Drive Side

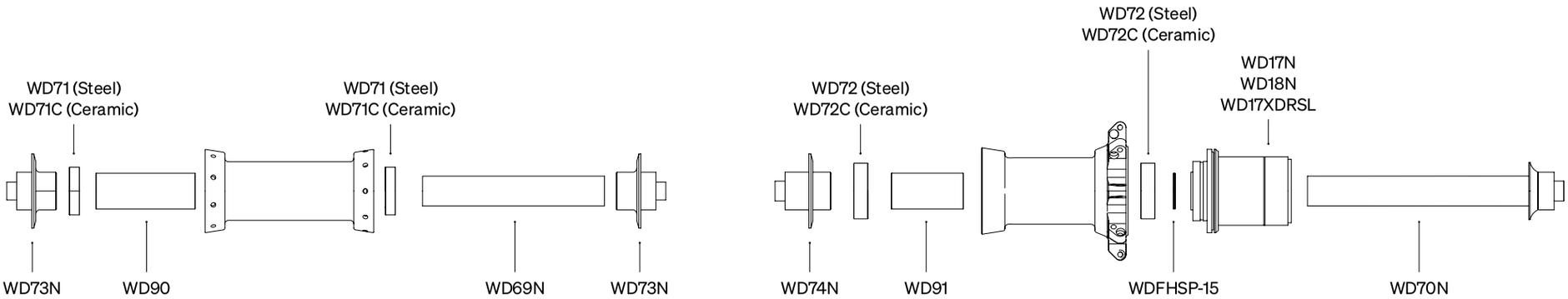

Ricambi ruote freni a disco Spare parts disc brake wheels

Product	Front Wheel Spoke	Rear Wheel Spoke DS	Rear Wheel Spoke NDS	Nipples	Shimano Freehub 11sp	Campy FreeHub 12sp	Sram FreeHub XDR 12sp	Campy N3W FreeHub 13sp	Front Hub Alloy Sleeve	Rear Hub Axle	Front Hub LEFT End-Cap	Front Hub RIGHT End-Cap	Rear Hub LEFT End-Cap	Rear Hub RIGHT End-Cap	Bearing Front Hub	Bearing Rear Hub	Tubeless Rim Tape	Front Wheel Spoke Tension	Rear Wheel Spoke Tension
Gera Carbon	WDSP291 291mm	WDSP289 289mm	WDSP291 291mm	WDiN15ABSB 15mm	WD17DB	WD18DB	WD17XDRSLDB	WD18DBN3W	WD69DB	WD70DB	WD73DB12L (Ø 12 mm)	WD73DB12R (Ø 12 mm)	WD74DB12L (Ø 12 mm)	WD75DB12L (Ø 12 mm)	WD71DB 28x17x7 Steel	WD71DB 28x17x7 Steel	WDT25 25mm	100kgf	120kgf DS 80kgf NDS
Gera Alloy	WDSP297 297mm	WDSP295 295mm	WDSP297 297mm	WDN15ABSB 15mm	WD17DB	WD18DB	WD17XDRSLDB	WD18DBN3W	WD69DB	WD70DB	WD73DB15L (Ø 15 mm)	WD73DB15R (Ø 15 mm)	WD74DBQR (QR)	WD75DBQR (QR)	WD71DB 28x17x7 Steel	WD71DB 28x17x7 Steel	WDT25 25mm	100kgf	120kgf DS 80kgf NDS
SL45DB	WDSP278 278mm	WDSP276 276mm	WDSP278 278mm	WDN15ABSB 15mm	WD17DB	WD18DB	WD17XDRSLDB	WD18DBN3W	WD69DB	WD70DB	WD73QRL (QR)	WD73QRR (QR)			WD71DBC 28x17x7 Ceramic	WD71DBC 28x17x7 Ceramic	WDT21 21mm	100kgf	120kgf DS 80kgf NDS
SL62DB	WDSP261 261mm	WDSP259 259mm	WDSP262 262mm	WDN15ABSB 15mm	WD17DB	WD18DB	WD17XDRSLDB	WD18DBN3W	WD69DB	WD70DB					WD71DBC 28x17x7 Ceramic	WD71DBC 28x17x7 Ceramic	WDT21 21mm	100kgf	120kgf DS 80kgf NDS
ZERO2DB LTD	WDSP297 297mm	WDSP295 295mm	WDSP297 297mm	WDN15ABSB 15mm	WD17DB	WD18DB	WD17XDRSLDB	WD18DBN3W	WD69DB	WD70DB					WD71DBC 28x17x7 Ceramic	WD71DBC 28x17x7 Ceramic	WDT21 21mm	100kgf	120kgf DS 80kgf NDS
SL30TDB	WDSP293 293mm	WDSP291 291mm	WDSP295 295mm	WDN15ABSB 15mm	WD17DB	WD18DB	WD17XDRSLDB	WD18DBN3W	WD69DB	WD70DB					WD71DBC 28x17x7 Ceramic	WD71DBC 28x17x7 Ceramic	-	100kgf	120kgf DS 80kgf NDS
SL45TDB	WDSP278 278mm	WDSP76 276mm	WDSP278 278mm	WDN15ABSB 15mm	WD17DB	WD18DB	WD17XDRSLDB	WD18DBN3W	WD69DB	WD70DB					WD71DBC 28x17x7 Ceramic	WD71DBC 28x17x7 Ceramic	-	100kgf	120kgf DS 80kgf NDS
SL88TDB	WDSP235 235mm	WDSP233 233mm	WDSP235 235mm	WDN15ABSB 15mm	WD17DB	WD18DB	WD17XDRSLDB	WD18DBN3W	WD69DB	WD70DB					WD71DBC 28x17x7 Ceramic	WD71DBC 28x17x7 Ceramic	-	100kgf	120kgf DS 80kgf NDS

DS = Lato Cassetta / Drive Side
NDS = Lato Opposto Cassetta / Non Drive Side

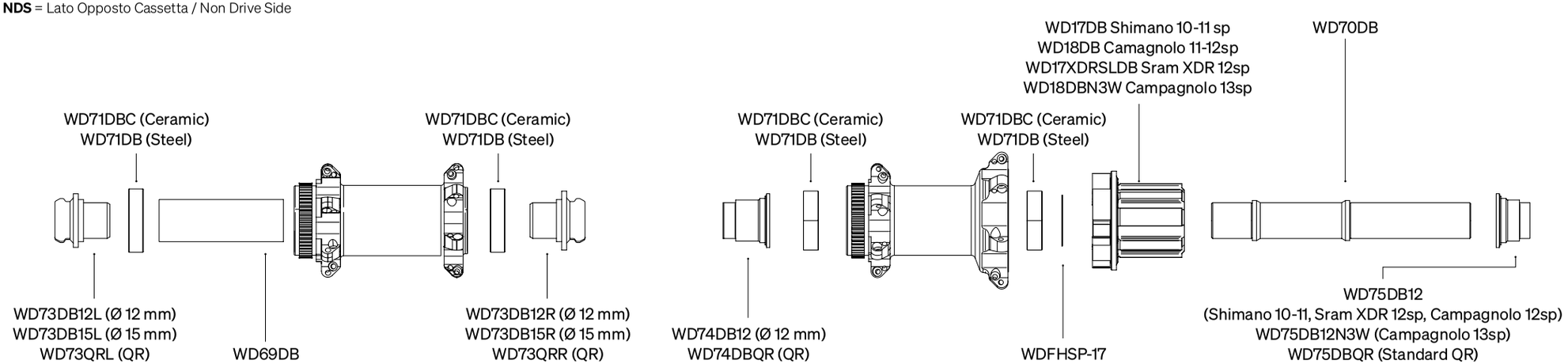

Alanera RS
Ricambi/Spare Parts

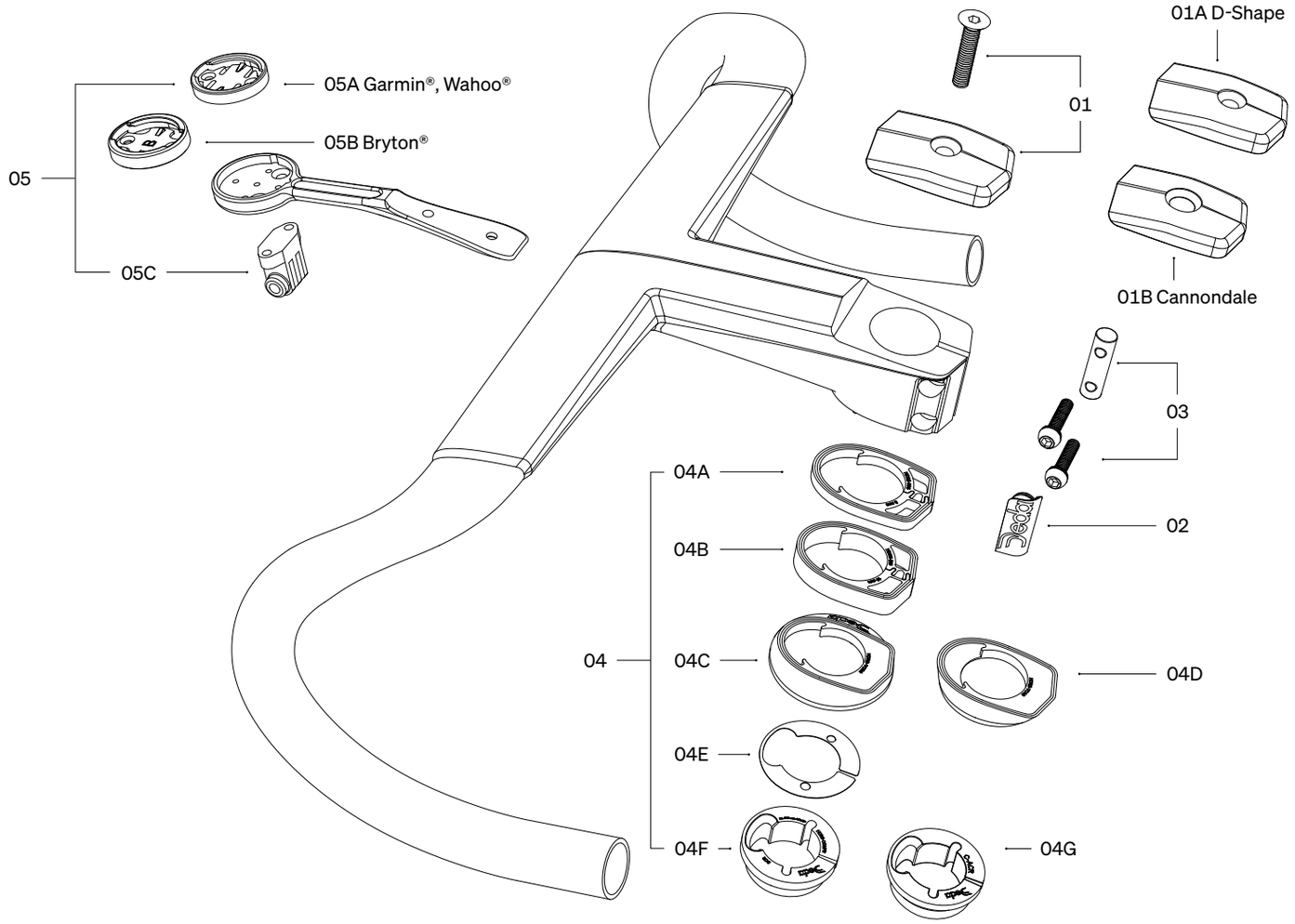

↓ Art	↓ Deda Part Code	↓ Description	↓ Material	↓ Finish	↓ EAN13 Code
01	HDRS-TP	ALANERA RS topcap, alloy 6061, incl. M6×30 aluminum screw	Alloy	Black	8055774365925
01A*	HDRS-TP-DX	ALANERA RS topcap for D-SHAPE fork steerer	Alloy	Black	8055774365956
01B*	HDRS-TP-CANN2X	ALANERA RS topcap for Cannondale SuperSix 2023 & LAB71	Alloy	Black	8055774365963
02	RS-COVER	RS Nylon cover	Nylon	Black	8055774365970
03	RS-CLAMPKIT	ALANERA RS stem clamp kit, inlc. titanium screws	Alloy + Titanium	Black	8055774365932
04	HDRSKITX	ALANERA RS headset spacers kit, black, nylon	Nylon	Black	8055774365949
04A	HDRS-S05	ALANERA RS 5mm spacer, black, nylon	Nylon	Black	8055774365987
04B	HDRS-S10	ALANERA RS 10mm spacer, black, nylon	Nylon	Black	8055774365994
04C	HDRS-TC56	ALANERA RS topcover, 56mm, black, nylon	Nylon	Black	8055774366007
04D	HDRS-TC46	ALANERA RS topcover, 46mm, black, nylon	Nylon	Black	8055774366014
04E	HDRS-MS	ALANERA RS micro shims	Steel	Silver	8055774366021
04F	HDRS-COMPR	ALANERA RS compression ring, 45°×45°, PA66 Nylon, Black	Nylon	Black	8055774366038
04G*	HDRS-COMPR-ACR	ALANERA RS compression ring, 36°×45°, PA66 Nylon, Black	Nylon	Black	8055774366816
05	ALAMOUNTRS	ALANERA RS computer mount, alloy 6061, for Garmin®, Wahoo®, Bryton®, GoPro®	Alloy	Black	8055774366045
05A	INSERTMOUNT2	Garmin®/Wahoo® Insert for Computer Mount (2 screws)	Nylon	Black	8055774360036
05B	INSERTMOUNT3	Bryton Insert for Computer & Seapost Mount (2 screws)	Nylon	Black	8055774364294
05C	GOPROSUPP-NX	GoPro® support, nylon, incl. 2 pcs M4 screws	Nylon	Black	8055774367523

(*) Non incluso con il manubrio; disponibile come ricambio. / Not included with the handlebar; available as spare.

Superbox V2
Ricambi/Spare Parts

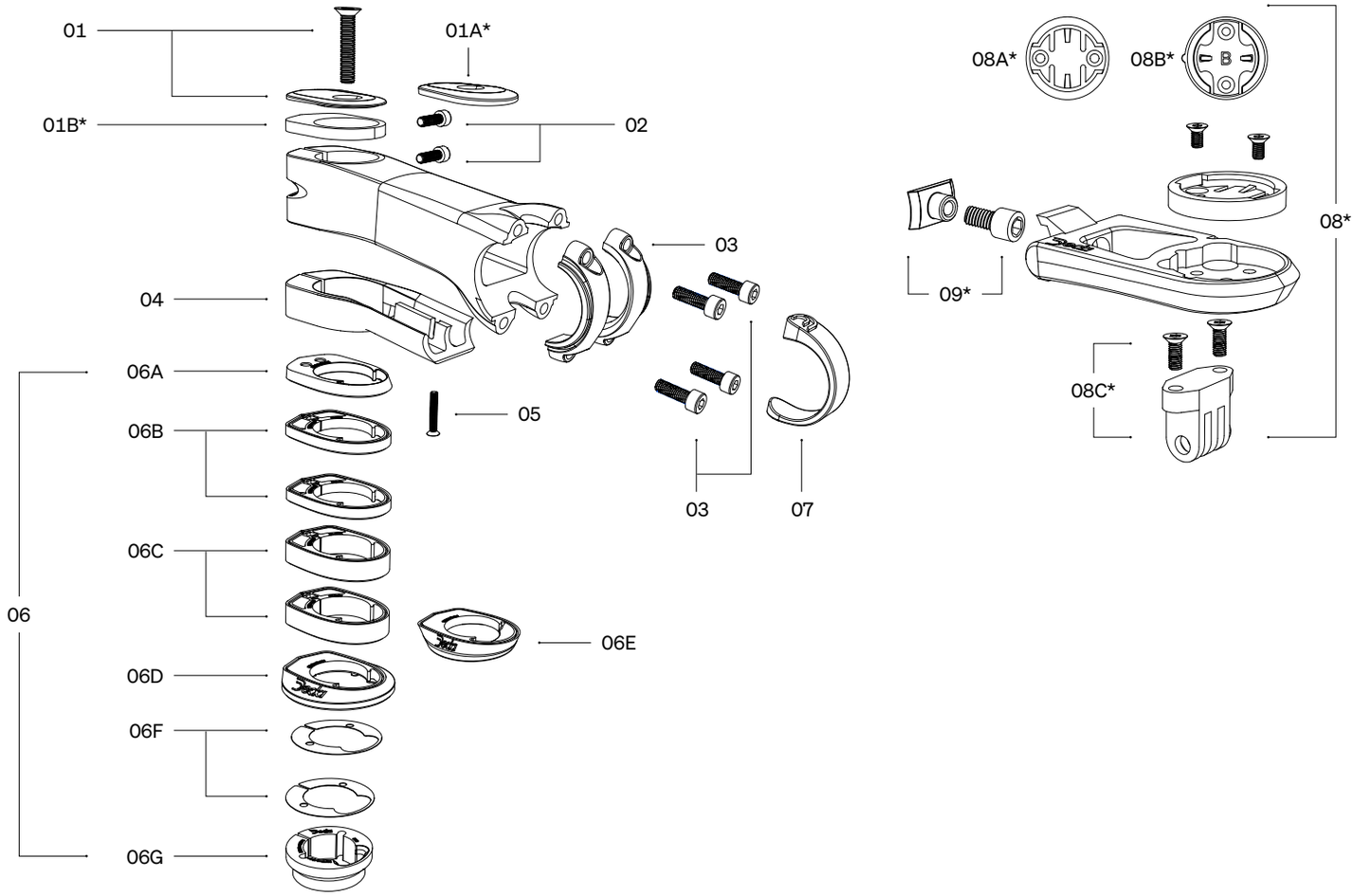

↓ Art	↓ Deda Part Code	↓ Description	↓ Material	↓ Finish	↓ EAN13 Code
01	HDSBXTP	Superbox topcap, black, alloy 6061, incl. M6×30 aluminium screw	Aluminium	Black	8052783488324
1A*	HDSBXTP-4DX	SUPERBOX & ALANERA topcap for D-SHAPE fork, aluminium bolt M6×20 mm	Aluminium	Black	8052783489703
1B*	HDALADCRS05X	ALANERA & SUPERBOX topcap spacer, 5mm, nylon	Aluminium	Black	8052783488959
02	M5X18GST	Screw M5X18 Stainless steel, GST black coating, w/washer + threadlock	Steel	Black	8055774361088
03	FCSBX-V2	Superbox V2 faceplate, black anodized, Alloy 6061	Aluminium	Black	8055774368568
04A	SBXCOVER70	SUPERBOX cover, for 60, 70 & 80 mm stem, nylon, black	Nylon	Black	8055774362405
04B	SBXCOVER90	SUPERBOX cover, for 90 mm stem, nylon, black	Nylon	Black	8052783488362
04C	SBXCOVER100	SUPERBOX cover, for 100 mm stem, nylon, black	Nylon	Black	8052783488379
04D	SBXCOVER110	SUPERBOX cover, for 110 mm stem, nylon, black	Nylon	Black	8052783488393
04E	SBXCOVER120	SUPERBOX cover, for 120 mm stem, nylon, black	Nylon	Black	8052783488409
04F	SBXCOVER130	SUPERBOX cover, for 130 mm stem, nylon, black	Nylon	Black	8052783488416
04G	SBXCOVER140	SUPERBOX cover, for 140, 150, 160 & 170 mm stem, nylon, black	Nylon	Black	8052783489529
05	M3X20	Screw M3X20 CrMo, black, for SUPERBOX cover	CrMo	Black	8052783488348
06	HDRSKIT-SBOX	Superbox V2 headset spacers kit, black, nylon	Nylon	Black	8055774368582
06A	HDRS-SBOX	Alanera DCR/Superbox DCR spacer adapter for RS spacers kit	Nylon	Black	8055774367028
06B	HDRS-S05	Alanera RS 5mm spacer, black, nylon (1 pc)	Nylon	Black	8055774365987
06C	HDRS-S10	Alanera RS 10mm spacer, black, nylon (1 pc)	Nylon	Black	8055774365994
06D	HDRS-TC56	Alanera RS topcover, 56 mm, black, nylon, for 1.5" upper bearing	Nylon	Black	8055774366007
06E	HDRS-TC46	Alanera RS topcover, 46 mm, black, nylon, for 1" 1/8 upper bearing	Nylon	Black	8055774366014
06F	HDRS-MS	Microshims RS for 1.5" bearing , int. diam. 28.8 , ext. 47.0 mm, steel (2 pcs)	Steel	Silver	8055774366021
06G	HDRS-COMPR	RS compression ring, 45°×45°, PA66 Nylon, Black	Nylon	Black	8055774366038
07	DCLIPBLACK	D-CLIP for Superzero and Superbox stem, nylon, black	Nylon	Black	8059265684014
08*	SBOXMOUNTKIT	Superbox computer mount, nylon, black, Garmin®, Wahoo®, Bryton®, GoPro®	Nylon	Black	8055774362641
08A*	INSERTMOUNT2	Garmin®/Wahoo® Insert for Computer Mount (2 screws)	Nylon	Black	8055774360036
08B*	INSERTMOUNT3	Bryton® Insert for Computer & Seapost Mount (2 screws)	Nylon	Black	8055774364294
08C*	GOPROSUPP-NX	GO PRO® support, nylon, incl. 2 pcs M4 screws	Nylon	Black	8055774367523
09*	SBOXNUT	Nut for Superbox computer mount, aluminum, black, incl. M5×10 screw	Aluminum	Black	8055774362726

(*) Non incluso nell'attacco; disponibile come accessorio. / Not included with the stem; available as accessories.

Vinci
Ricambi/Spare Parts

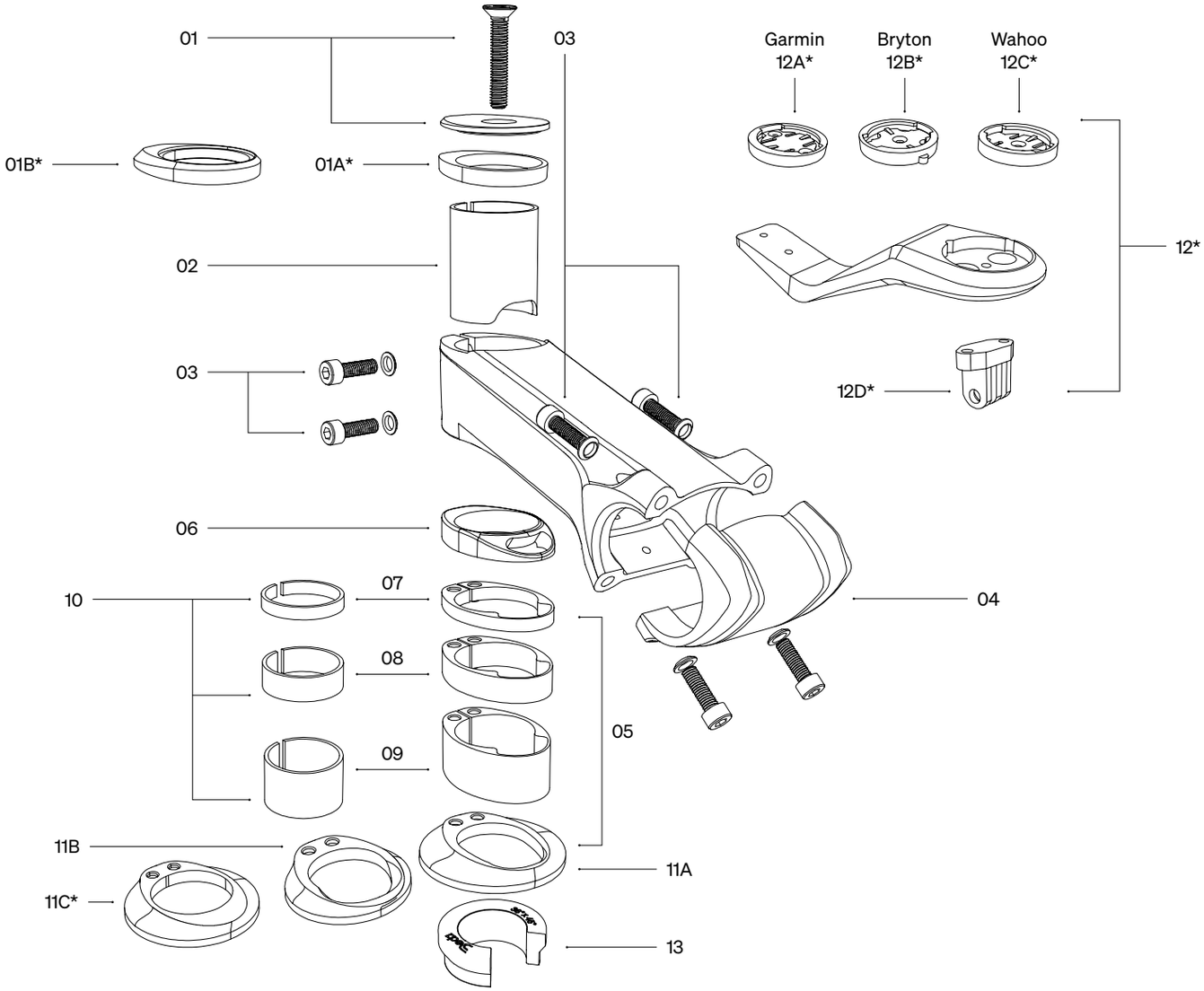

↓ Art	↓ Deda Part Code	↓ Description	↓ Material	↓ Finish	↓ EAN13 Code
01	HDVCNTP	VINCI TOPCAP, black anodized, with alloy bolt M6×30mm	Alloy	Black	8052783486467
01A*	HDVCNS05-TC	VINCI SPACER for topcap, 5 mm, Nylon, Black	Nylon	Black	8055774363020
01B*	HDVCNTPA	VINCI TOPCAP ADAPTER for D-shape fork steerer	Nylon	Black	8052783488430
02	VCNSLEEVE	VINCI STEM SLEEVE ADAPTER 1" 1-4 to 1" 1-8, Black	Alloy	Black	8052783486474
03	M5X18ZBV	SCREW/VITE M5×18 CrMo, BLACK, w/ convex washer (VINCI stem)	Steel	Black	8052783486825
04	FCVCN	FACEPLATE VINCI STEM / Frontalino	Alloy	Black	8052783486481
05	HDVCNKIT	VINCI headset spacers kit, nylon	Nylon	Black	8052783486498
06	HDVCNTS	VINCI TOP SPACER, nylon	Nylon	Black	8052783486504
07	HDVCNS05	VINCI 5mm SPACER, nylon	Nylon	Black	8052783486511
08	HDVCNS10	VINCI 10mm SPACER, nylon	Nylon	Black	8052783486528
09	HDVCNS20	VINCI 20mm SPACER, nylon	Nylon	Black	8052783486535
10	HDVCN-SLEEVEKIT	INNER SLEEVES for VINCI spacers 1" 1-4 to 1" 1-8, alloy, 1 set (1×5mm 1×10mm 1×20mm)	Alloy	Black	8052783489543
11A	HDVCNTC56	VINCI TOP COVER, 56mm, nylon, for 1.5" upper bearing	Nylon	Black	8052783486542
11B	HDVCNTC46	VINCI TOP COVER, 46mm, nylon, for 1" 1-8 upper bearing	Nylon	Black	8052783486559
11C*	HDVCNTC52	VINCI TOP COVER, 52mm, nylon, for 1" 1-4 upper bearing	Nylon	Black	8052783486566
12*	VCNMOUNT	VINCI COMPUTER MOUNT for Garmin, Whaoo, Bryton, GoPro,	Nylon	Black	8052783486603
12A*	INSERTMOUNT2	Garmin/Wahoo Insert for Computer Mount (2 screws)	Nylon	Black	8055774360036
12B*	INSERTMOUNT1	Bryton insert for Jet & Vinci Computer Mount, 1 screw	Nylon	Black	8052783489710
12C*	INSERTMOUNT	Wahoo insert for Vinci Computer Mount, 1 screw	Nylon	Black	8052783488867
12D*	GOPROSUPPX	GO PRO support, alloy black, incl. 2 pcs M5 screws	Alloy	Black	8055774360982
13	HDCOMPRACR	Compression Ring for ACR headset, 36°×45°, PA66	Nylon	Grey	8052783486924

(*) Non incluso con l'attacco; disponibile come accessorio. / Not included with the stem; available as accessories.

Serie Sterzo DCR & S-DCR
Headset DCR & S-DCR

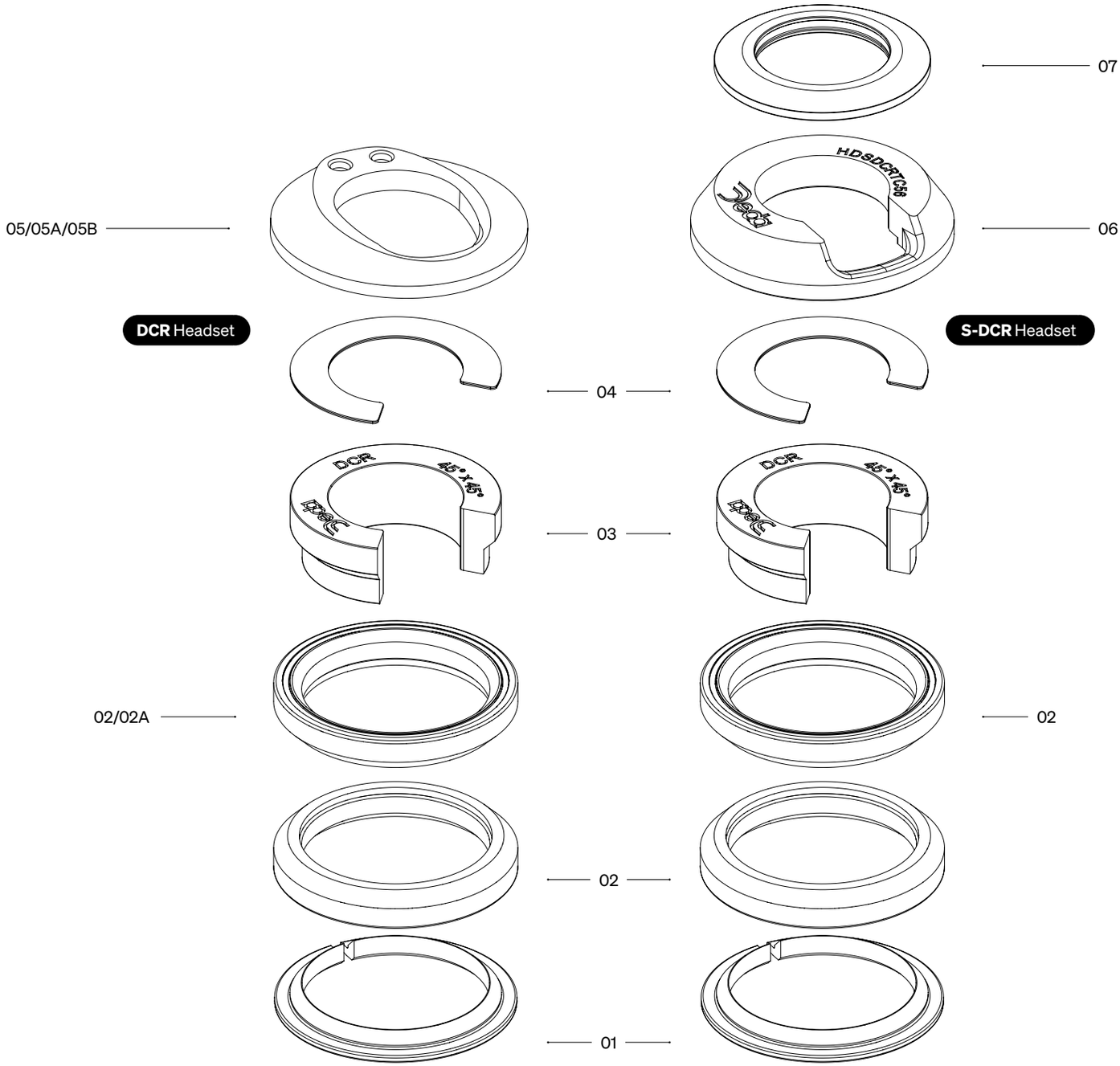

↓ Art	↓ Deda Part Code	↓ Description	↓ Material	↓ Finish	↓ EAN13 Code
01	HDCR5N	1"-1/2 CROWN RACE Integrated headset (IN&DCR), 45°×45°, Alloy, cut-style	Alloy	Silver	8052783486597
02	HDB5SUJ	BEARING 1"-1/2 for Integrated headset (IN), ACB, 51,9×40×8 mm	Steel	Silver	8051406528096
02A	HDB5SUJ-36	BEARING 1"-1/2 for Integrated headset (IN&DCR), 36×45, ACB, 51,8×40×8mm	Steel	Silver	8055774364133
03	HDCOMPRDCR	COMPRESSION RING for DCR headset, 45°×45°, PA66	Nylon	Black	8052783486580
03A	HDCOMPRACR	COMPRESSION RING for ACR headset, 36°×45°, PA66	Nylon	Grey	8052783486924
04	HDDCRMS	DCR MICROSPACERS	Steel	Silver	8052783486573
05*	HDVCNTC56	VINCI TOP COVER, 56 mm, nylon, for 1.5" upper bearing	Nylon	Black	8052783486542
05A*	HDALADCRTC56	SUPERBOX Top Cover, 56 mm, nylon, for 1.5" upper bearing	Nylon	Black	8052783486443
05B*	HDRS-TC56	ALANERA RS Top Cover, 56 mm, black, nylon	Nylon	Black	8055774366007
06	HDSDCRTC56	S-DCR TOP COVER, 56 mm, Nylon, for 1.5" upper bearing	Nylon	Black	8055774360098
07	HDTPA46N	HEADSET TOP COVER, 46 mm, Alloy	Nylon	Black	8052783485361

(*) Incluso con Alanera RS, Superbox o Vinci. / Included with Alanera RS, Superbox or Vinci.

Serie Sterzo: IN-4 & IN-5

Headset: IN-4 & IN-5

IN-4 & IN-5

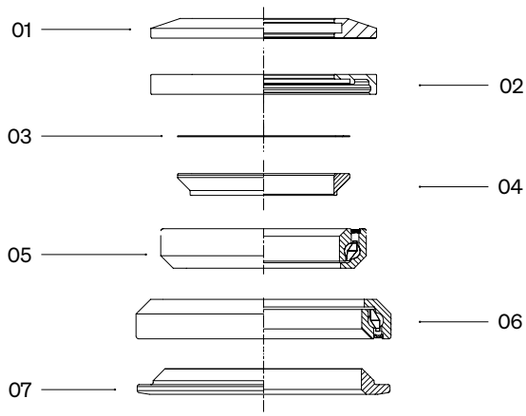

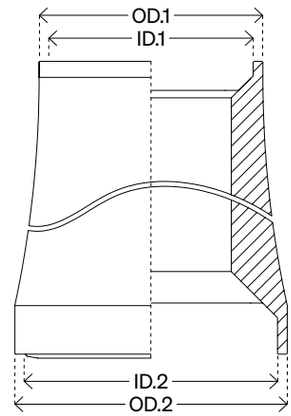

↓ Headset	01	02	03	04	05	06	07
IN-4	**HDTPA46N** Alloy, Ø46 mm	**HDHTC46N** Alloy Ø46 mm	**HDMS***	**HDCOMPRIN** Nylon Grey	**HDB8INSUJ** 41,8×30,5×8 mm	**HDB4INSUJ** 46,9×34,1×7 mm	**HDCR4IN**
IN-5	**HDTPA46N** Alloy, Ø46 mm	**HDHTC46N** Alloy Ø46 mm	**HDMS***	**HDCOMPRIN** Nylon Grey	**HDB8INSUJ** 41,8×30,5×8 mm	**HDB5SUJ** 51,9×40×8 mm	**HDCR5**

(*) masterpack 10 PCS

↓ Articolo Item	↓ Modello Model	↓ Tubo Sterzo Superiore Upper Frame Headtube		↓ Tubo Sterzo Superiore Upper Frame Headtube			↓ Tubo Sterzo Inferiore Lower Frame Headtube		↓ Cuscinetto Inferiore Lower Bearing			↓ Alt. Strz. Stack Hgt.
		↓ OD.1	↓ ID.1	↓ Type	↓ Bearing Cont. Ang.	↓ Bearing Cont. Ang.	↓ OD.2	↓ ID.2	↓ Type	↓ Bearing Cont. Ang.	↓ Bearing Size mm	
IN-4	Integrated	46 mm	42 mm	1 1/8"	45°×45°	41,8×30,5×8	52 mm	47 mm	1 1/4"	45°×45°	46,9×34,1×7	9,6 (8,8+0,8) mm
IN-5	Integrated	46 mm	42 mm	1 1/8"	45°×45°	41,8×30,5×8	56 mm	52 mm	1 1/2"	45°×45°	51,9×40×8	9,6 (8,8+0,8) mm

Serie Sterzo: Classic1 & Classic2

Headset: Classic1 & Classic2

Classic 1

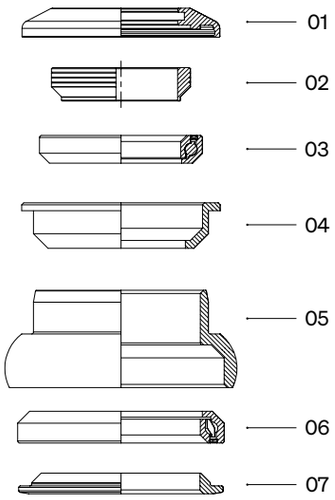

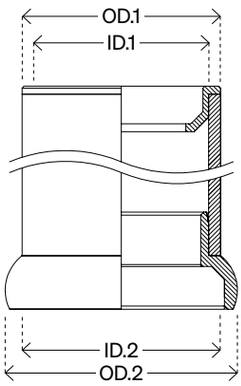

Classic 2

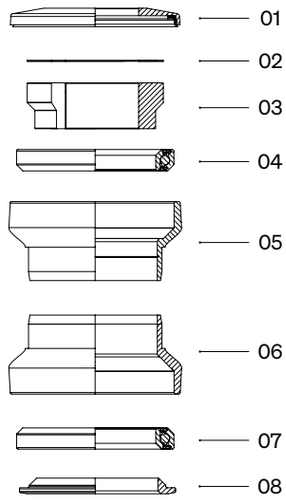

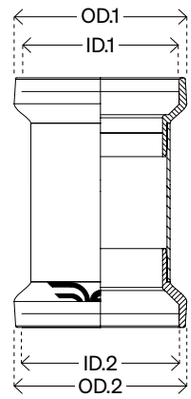

↓ Model	01	02	03	04	05	06	07	08
Classic 1	HDTPACL1B (black) HDTPACL1S (silver)	HDCOMPR-CL1	HDB8SISUJ (41×30.15×7)	HDUC-CL1	HDLC-CL1B (black) HDLC-CL1S (silver)	HDB5SUJ 51.9×40×8	HDCR5N	-
Classic 2	HDTPA56	HDDCRMS	HDCOMPRDCR	HDB5SISUJ (51.9×40×7)	HDUC-CL2	HDLC-CL2	HDB5SISUJ (51.9×40×7)	HDCR5N

↓ Articolo Item	↓ Modello Model	↓ Tubo Sterzo Superiore Upper Frame Headtube		↓ Tubo Sterzo Superiore Upper Frame Headtube			↓ Tubo Sterzo Inferiore Lower Frame Headtube		↓ Cuscinetto Inferiore Lower Bearing			↓ Alt. Strz. Stack Hgt.
		↓ OD.1	↓ ID.1	↓ Type	↓ Bearing Cont. Ang.	↓ Bearing Cont. Ang.	↓ OD.2	↓ ID.2	↓ Type	↓ Bearing Cont. Ang.	↓ Bearing Size mm	
Classic 1	Semi-integrate dupper / external lower	46 mm	44 mm	1 1/8”	45°×45°	41×30,15×7	46 mm	44 mm	1 1/2"	45°×45°	46,9×34,1×7	24, 4 (10,1 + 14,3) mm
Classic 2	External upper / external lower	46 mm	44 mm	1 1/2”	45°×45°	51,9×40×8	46 mm	44 mm	1 1/2"	45°×45°	51,9×40×8	42 (21 + 21) mm

Attacchi/Stems
Ricambi/Spare Parts

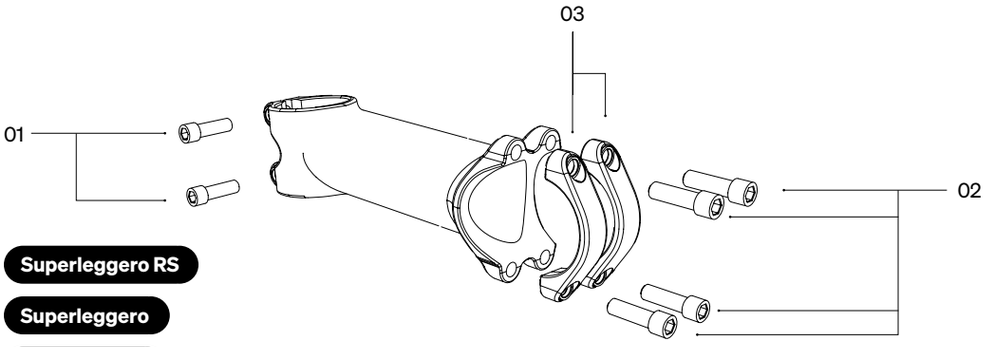

Superleggero RS

Superleggero

Superzero RS

Superzero

Zero 100

Zero 100 Team

Zero 2

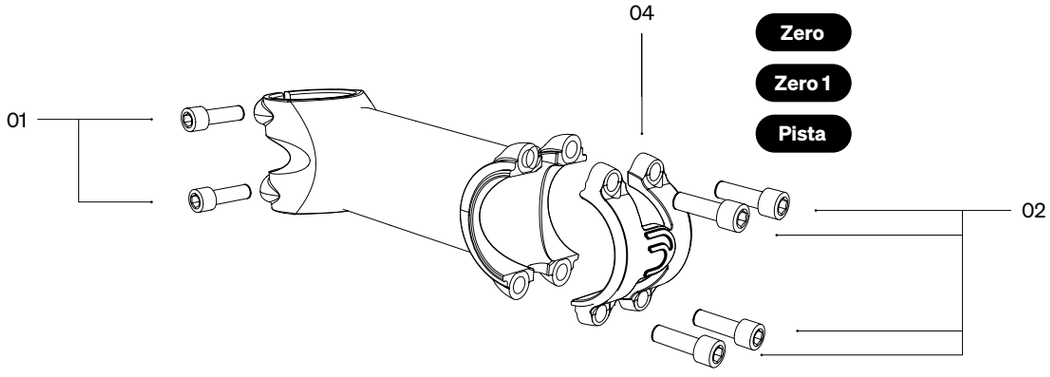

Zero

Zero 1

Pista

↓ Stem	↓ Screw Material	↓ Screw Finish	↓ 01	↓ 02	↓ 03
Superleggero	Titanium	Black Titanium	**M5X16TIT3B** M5 × 16 mm w/convex washer	**M5X16TIT2B** M5 × 16 mm w/ flat washer	**FCASLN** 2-piece faceplate
Superleggero RS	Titanium	Black Titanium	**M5X16TIT** M5 × 16 mm w/convex washer	**M5X16TIT** M5 × 16 mm w/convex washer	**FCASLRS** 2-piece faceplate
Superzero RS	Titanium	Black Titanium	**M5X16TIT5B** M5 × 16 mm W/convex washer	**M5X16TIT5B** M5 × 16 mm W/convex washer	**FCSZRS** 2-piece faceplate
Superzero	CroMo	Zinc Black	**M5X16ZB** M5 × 16 mm w/flat washer	**M5X16ZB** M5 × 16 mm w/flat washer	**FCSZN** 2-piece faceplate (Team finish)
Zero 100 Zero 100 Team	CroMo	Zinc Black	**M5X16ZB100** M5 × 16 mm w/flat washer	**M5X16ZB100** M5 × 16 mm w/flat washer	**FC100NP** 2-piece faceplate
Zero 2	CroMo	Zinc Black	**M5X18ZB** M5 × 18 mm w/flat washer	**M5X18ZB** M5 × 18 mm w/flat washer	**FCZ2N1** 2-piece faceplate (Team finish)
Zero 1	CroMo	Zinc Black	**M5X18ZB** M5 × 18 mm w/flat washer	**M5X18ZB** M5 × 18 mm w/flat washer	-
Zero	CroMo	Zinc Black	**M5X16ZE** M5 × 16 mm w/ spring washer	**M5X16ZE** M5 × 16 mm w/spring washer	-
Pista	CroMo	Chrome Plated	**M5X16CRMO** M5 × 16 mm w/flat washer	**M5X16CRMO** M5 × 16 mm w/flat washer	-
Murex	CroMo	Chrome Plated	-	-	-

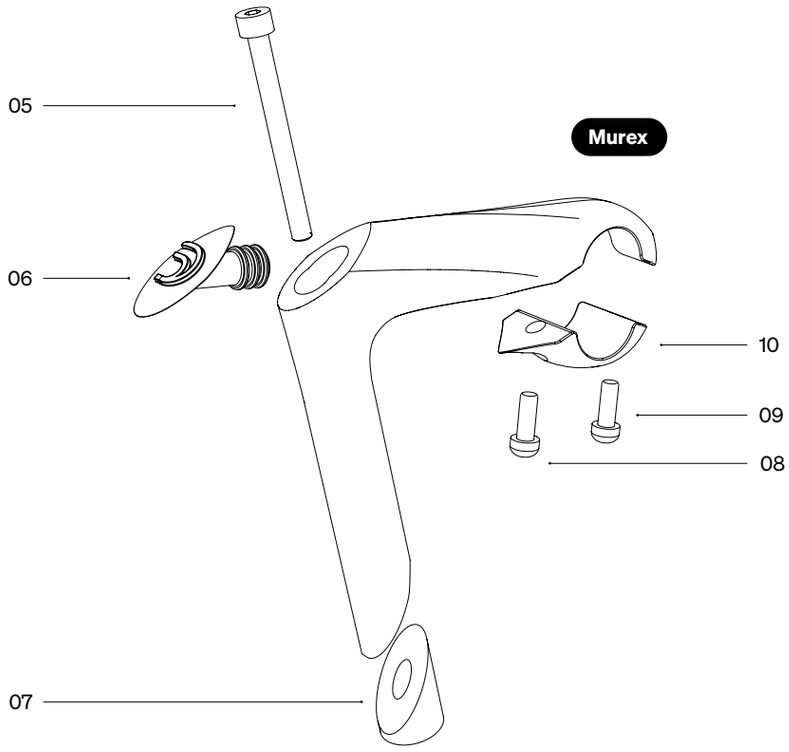

↓ 04	↓ 05	↓ 06	↓ 07	↓ 08	↓ 09	↓10
-	-	-	-	-	-	-
-	-	-	-	-	-	-
-	-	-	-	-	-	-
-	-	-	-	-	-	-
-	-	-	-	-	-	-
-	-	-	-	-	-	-
FCZ1N 1-piece faceplate	-	-	-	-	-	-
FCZN 1-piece faceplate	-	-	-	-	-	-
FCPISTA 1-piece faceplate	-	-	-	-	-	-
-	**VMUREX** M8 × 135 mm w/washer	**CAPMUREX** Murex rubber cap	**WEDGEMUREX** Expander	**M8X22CRMO** M8 × 22 mm	**M8X18CRMO** M8 × 18 mm	**FCMX** 1-piece faceplate

Reggisella/Seatposts
Ricambi/Spare Parts

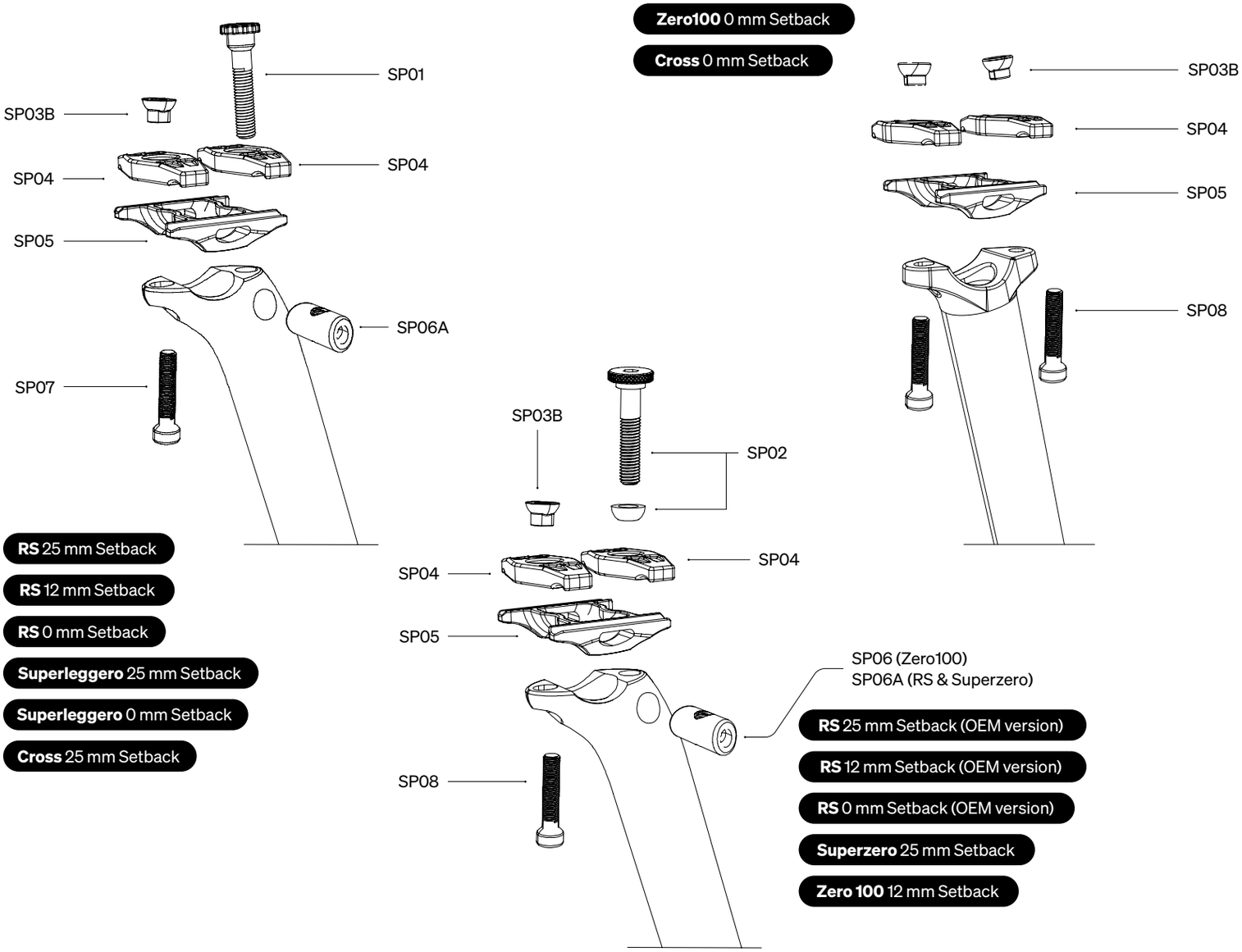

↓Deda Part	↓ Description	↓ Material	↓ Finish	↓ RS & Superleggero	↓ RS OEM & Superzero	↓ Zero100
				25, 12 & 0 mm	25, 12 & 0 mm	0 mm
SP01	Seatpost Fixing Bolt M7×30 mm Titanium	Titanium	Titanium	Y	-	-
SP02	Seatpost Fixing Bolt, M7×35 mm, w/convex washer, stainless steel	Steel	Chrome Plated	-	Y	-
SP03B	Seatpost End-Nut (1 Piece)	Steel	Chrome Plated	Y	Y	Y
SP04	Seatpost Upper Plate	Alloy	Black	Y	Y	Y
SP05	Seatpost Lower Plate	Alloy	Black	Y	Y	Y
SP06	Seatpost Barrel Nut	Alloy	Black	-	-	-
SP06A	Seatpost Barrel Nut	Alloy	Black	Y	Y	-
SP07	Seatpost Fixing Bolt, M6×28 mm, black PVD, titanium	Titanium	Titanium	Y	-	-
SP08	Seatpost Fixing Bolt, M6×28 mm, steel	Steel	Chrome Plated	-	Y	Y
SP09	Cylinder Upper Plate (1 Piece)	Alloy	Silver	-	-	-
SP10	Seatpost Lower Plate	Alloy	Silver	-	-	-
SP11	Seatpost Fixing Bolt M6×40 mm Steel	Steel	Chrome Plated	-	-	-
SP12	Upper Plate Kit (Including Bolt)	-	-	-	-	-
SP13	Seatpost Lower Plate	Alloy	Black	-	-	-
SP14	Seatpost Fixing Bolt M6 × 25 mm Steel	Steel	Chrome Plated	-	-	-
SP16	Seatpost Upper Plate (Zero)	Alloy	Black	-	-	-
SP17	Seatpost Upper Plate (Zero)	Alloy	Black	-	-	-
SP18	Seatpost Fixing Bolt & Nut, M6×28 mm, steel, 1 Pc (Zero)	Steel	Chrome Plated	-	-	-

RS01 21 mm Setback

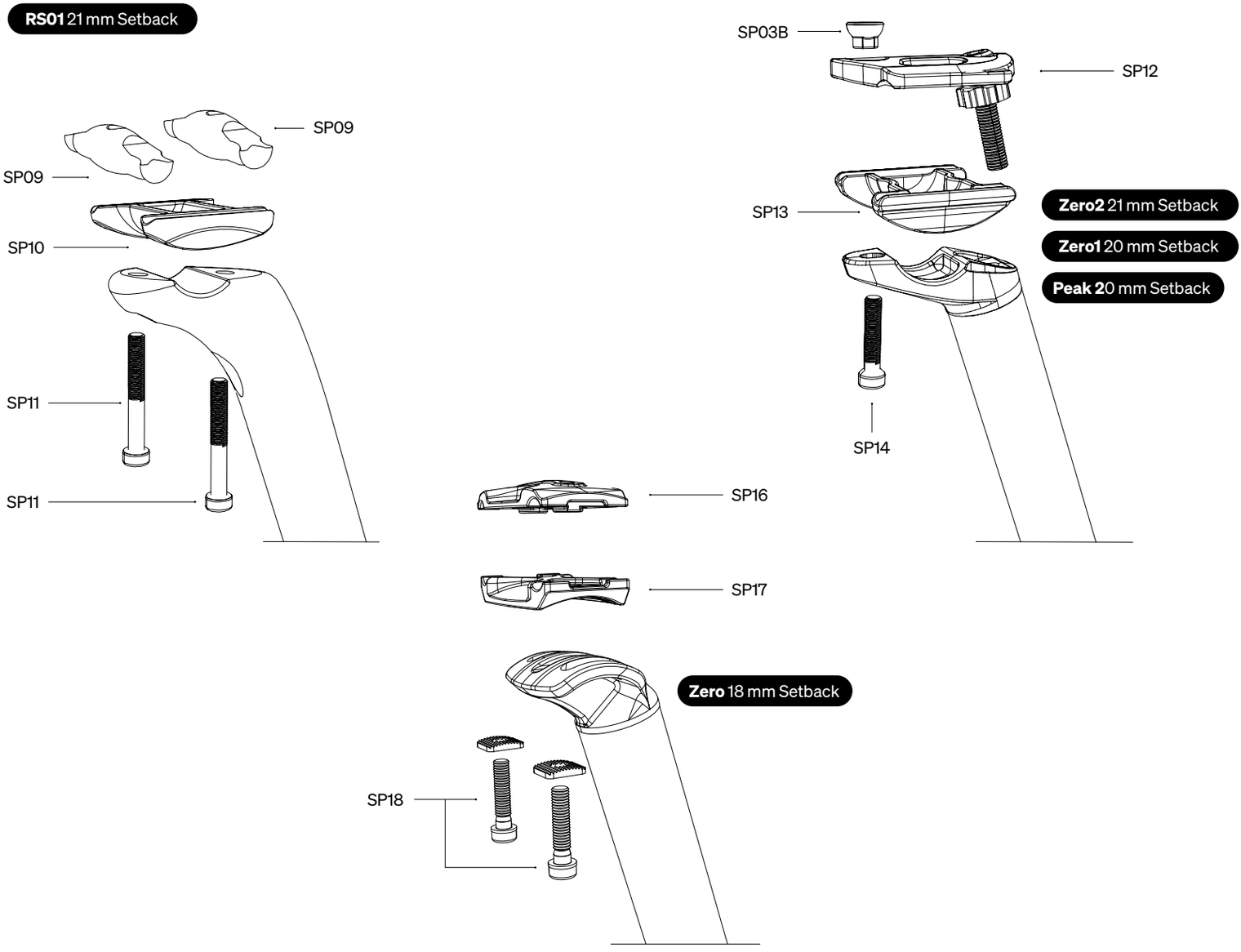

↓ Zero100	↓ Zero2	↓ Zero1	↓ Zero	↓ RS01	↓ Cross	↓ Cross	↓ Peak
12 mm	21 mm	20 mm	18 mm	21 mm	0 mm	25 mm	20 mm
-	-	-	-	-	-	Y	-
Y	-	-	-	-	-	-	-
Y	-	-	-	-	Y	Y	Y
Y	-	-	-	-	Y	Y	-
Y	-	-	-	-	Y	Y	-
Y	-	-	-	-	-	-	-
-	-	-	-	-	-	Y	-
-	-	-	-	-	-	Y	-
Y	-	-	-	-	Y	-	-
-	-	-	-	Y	-	-	-
-	-	-	-	Y	-	-	-
-	-	-	-	Y	-	-	-
-	Y	Y	-	-	-	-	Y
-	Y	Y	-	-	-	-	Y
-	Y	Y	-	-	-	-	Y
-	-	-	Y	-	-	-	-
-	-	-	Y	-	-	-	-
-	-	-	Y	-	-	-	-

TT314®
Ricambi/Spare Parts

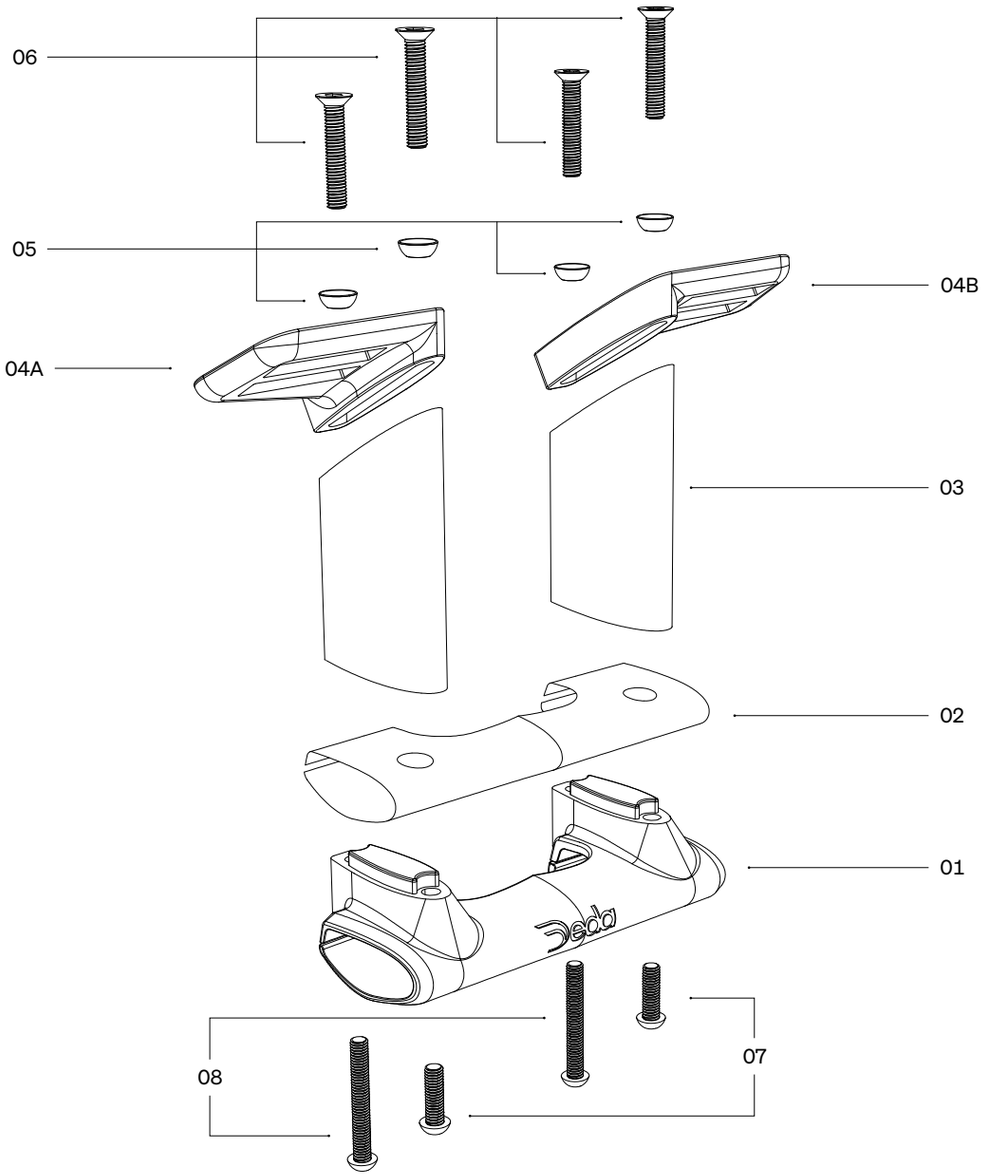

↓ Art	↓ Deda Part Code	↓ Description	↓ EAN13 Code
01	M-CLIP-ALARS	Clip for Alanera RS	8055774369695
02	CLIP-STICKER-ALARS	TT 314 protection sticker for Alanera RS	8055774369718
03	TT-SPACER-060	TT spacer 60mm/30° (1 set = 2 pcs), aluminum, black anodized	8055774369015
03A (*)	TT-SPACER-080	TT spacer 80mm/30° (1 set = 2 pcs), aluminum, black anodized	8055774369022
03B (*)	TT-SPACER-100	TT spacer 100mm/30° (1 set = 2 pcs), aluminum, black anodized	8055774369039
03C (*)	TT-SPACER-120	TT spacer 120mm/30° (1 set = 2 pcs), aluminum, black anodized	8055774369053
04	TT-PLATEKIT	TT plate kit, aluminium, black anodized (Rev. 7)	8055774369091
04A	TT-PL-R	TT plate RIGHT, aluminium, black anodized (Rev. 7)	8055774369107
04B	TT-PL-L	TT plate LEFT, aluminium, black anodized (Rev. 7)	8055774369114
05	SP15	Convex washer for M5 & M6 screws, black	8052783483060
06	M6X30S-T	M6X30 Screw, countersunk head, steel, black, w/threadlock	8055774364713
07	M6X20S-B	M6X20 Screw, button head, steel, black	8055774369701
08	M6X50S-B	M6X50 Screw, button head, steel, black	8055774368988

(*) Non incluso col clip-on; disponibile separatamente / Not included with the clip-on; available as accessory

JET2 EVO
Ricambi/Spare Parts

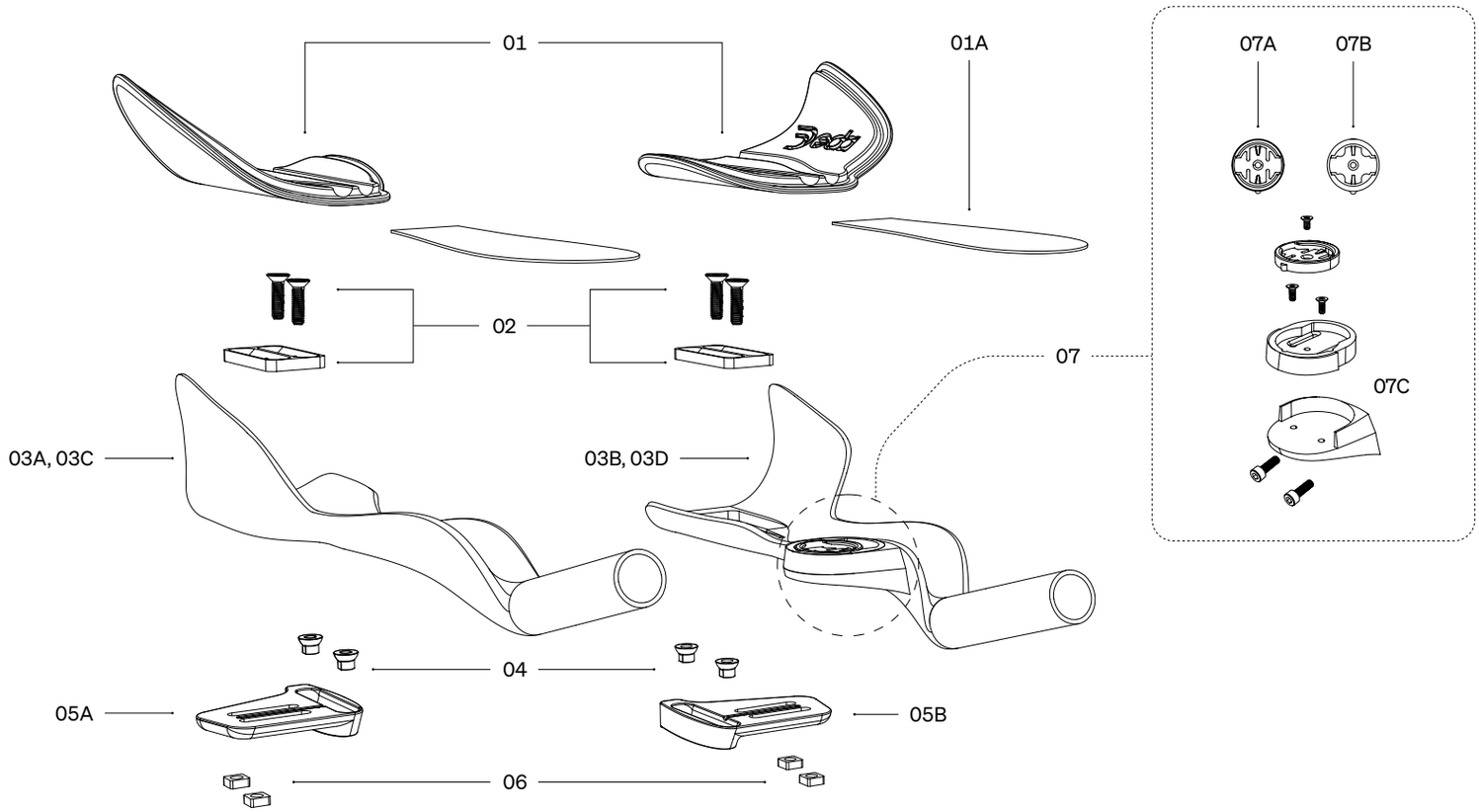

↓ Art	↓ Deda Part Code	↓ Description	↓ Material	↓ Finish	↓ EAN13 Code
01	JETPADKIT	JET Armrest Pad Kit (1 set, pads + 3K carbon sticker)	Lycra + Foam	Black	8052783488829
01A	JETSTICK	JET Cover, 3K Carbon Stickers (1 set, 2 pcs)	PU	Black	8052783488836
02	JET2-UPL	JET 2 kit upper plate, aluminium 6061, includes bolts M6x18, 1 set	Aluminum	Black	8055774361194
03A	JETSMALLPOB-R	JET Carbon Extension, SMALL (340 mm), RIGHT, POB finish, 1 pc	Carbon	Black	8052783488683
03B	JETSMALLPOB-L	JET Carbon Extension, SMALL (340 mm), LEFT, POB finish, 1 pc	Carbon	Black	8052783488690
03C	JETMEDIUMPOB-R	JET Carbon Extension, MEDIUM (370 mm), RIGHT, POB finish, 1 pc	Carbon	Black	8052783488706
03D	JETMEDIUMPOB-L	JET Carbon Extension, MEDIUM (370 mm), LEFT, POB finish, 1 pc	Carbon	Black	8052783488713
04	SP03B	Seatpost end-nut, hemispherical head, steel, black, 1 pc	Steel	Black	8055774361118
05A	TT-PL-R	TT plate RIGHT, aluminium, black anodized	Aluminium	Black	8055774369107
05B	TT-PL-L	TT plate LEFT, aluminium, black anodized	Aluminium	Black	8055774369114
06	TT-PL-L	M6 squared nut, 10x10x4mm, steel, black	Steel	Black	8055774369244
07	JETMOUNT	JET COMPUTER MOUNT for Garmin, Wahoo, Bryton	Nylon	Black	8052783488843
07A	INSERTMOUNT	GARMIN Insert for Jet & Vinci Computer Mount	Nylon	Black	8052783488867
07B	INSERTMOUNT1	BRYTON Insert for Jet & Vinci Computer Mount	Nylon	Black	8052783489710
07C	JETMOUNTXM	JET COMPUTER MOUNT Top + Bottom Part, incl screws (M4x12, M3x8)	Nylon	Black	8052783488850

JET2 HYDRO
Ricambi/Spare Parts

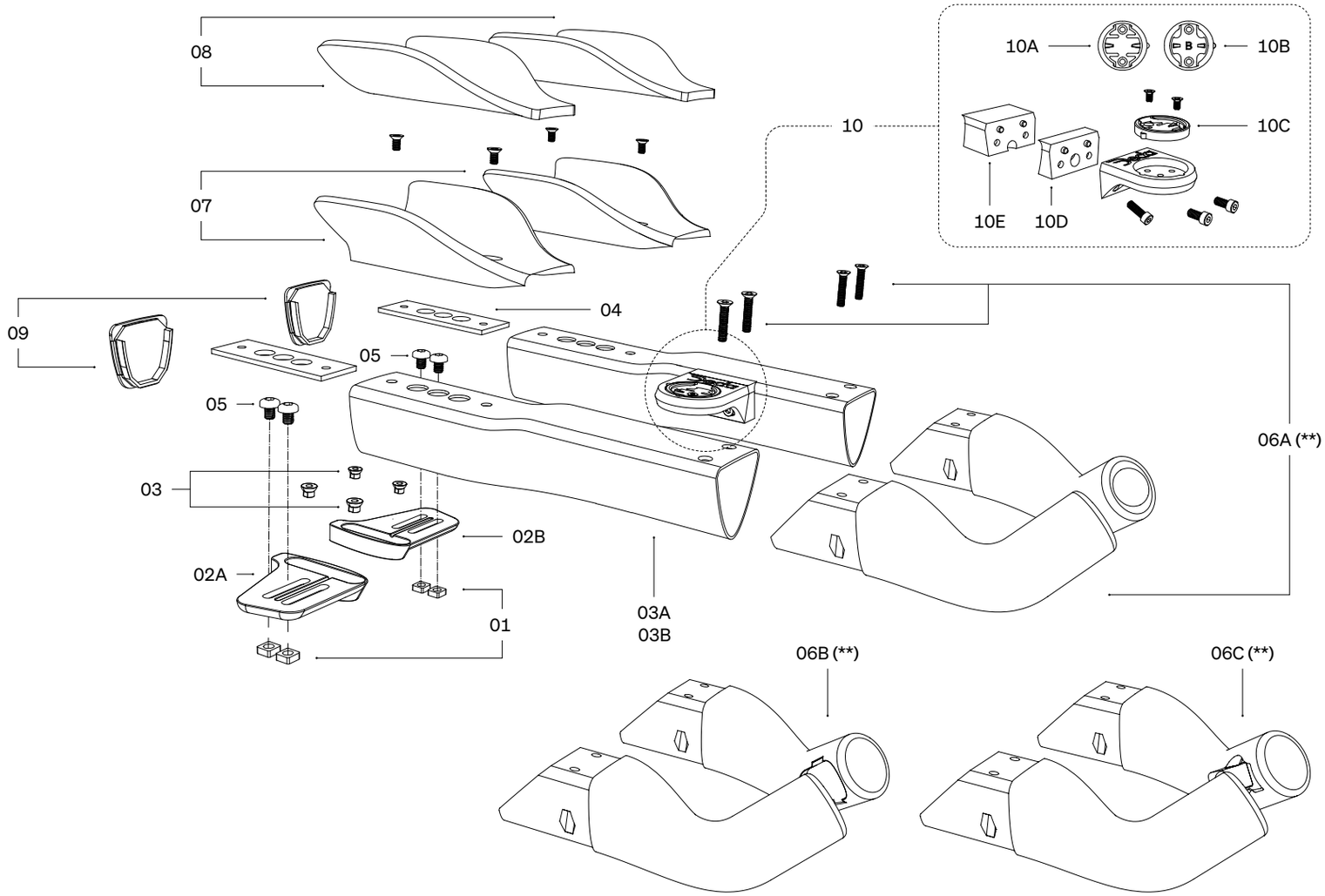

↓ Art	↓ Deda Part Code	↓ Description	↓ Material	↓ Finish	↓ EAN13 Code
01	NUT-1	M6 squared nut, 10×10×4 mm, steel, black	Steel	Black	8055774369244
02A	TT-PL-R	TT plate RIGHT, aluminium, black anodized	Aluminium	Black	8055774369107
02B	TT-PL-L	TT plate LEFT, aluminium, black anodized	Aluminium	Black	8055774369114
03	SP03B	Seatpost end-nut, hemispherical head, steel, black, 1 pc	Steel	Black	8055774361118
03A	M-JETHYDRO-S	Jet Hydro extensions, size Small (1 set = 2 pcs)	Aluminium	Black	8055774369251
03B	M-JETHYDRO-M	Jet Hydro extensions, size Medium (1 set = 2 pcs)	Aluminium	Black	8055774369268
04	TT-INPL	Inner plate, aluminium, black	Aluminium	Black	8055774369275
05	M6X10-B	M6X8 Screw, button head, steel, black, w/threadlock	Steel	Black	8055774369282
06A (**)	JH-GRIP-KIT	Jet Hydro grip kit (1 set = 2 pcs), incl. screws	Nylon	Black	8055774369299
06B (**)	JH-GRIP-KIT1	Jet Hydro grip kit, Shimano SW-R9150 satellite remote shifters (1 set = 2 pcs)	Nylon	Black	8055774369640
06C (**)	JH-GRIP-KIT2	Jet Hydro grip kit, Sram EC-BLIP-B1 satellite remote shifters (1 set = 2 pcs)	Nylon	Black	8055774369657
07	JH-ARMRESTKIT	Jet Hydro armrest kit, nylon, black, 1 set (2 pcs), incl. screws	Nylon	Black	8055774369305
08	JH-PADKIT	Jet Hydro pad kit, 3mm, foam, black, 1 set (2 pcs)	Lycra + Foam	Black	8055774369312
09	PLUG4	Plug End Cap for Jet Hydro extensions (1 pc)	Nylon	Black	8055774369329
10	TT-MOUNTKIT	TT computer mount, nylon, for Garmin, Wahoo & Bryton	Nylon	Black	8055774369152
10A	INSERTMOUNT2	Garmin/Wahoo Insert for computer mount (2 screws)	Nylon	Black	8055774360036
10B	INSERTMOUNT3	Bryton Insert for computer & seatpost mount (2 screws)	Nylon	Black	8055774364294
10C	M-TT-MOUNT	TT computer mount, nylon, black	Nylon	Black	8055774369169
10D	TT-MOUNT-S15	TT computer mount spacer, 15mm, nylon, black	Nylon	Black	8055774369176
10E	TT-MOUNT-S30	TT computer mount spacer, 30mm, nylon, black	Nylon	Black	8055774369183

(**) Inclusi rispettivamente nelle versioni per comandi remoti standard (6A), Shimano Satellite (6B), Sram Blips (6C).
Included respectively in the versions for standard remote shifters (6A), Shimano Satellite (6B), Sram Blips (6C).

JET2 to JET1 conversion spacer kit
Ricambi/Spare Parts

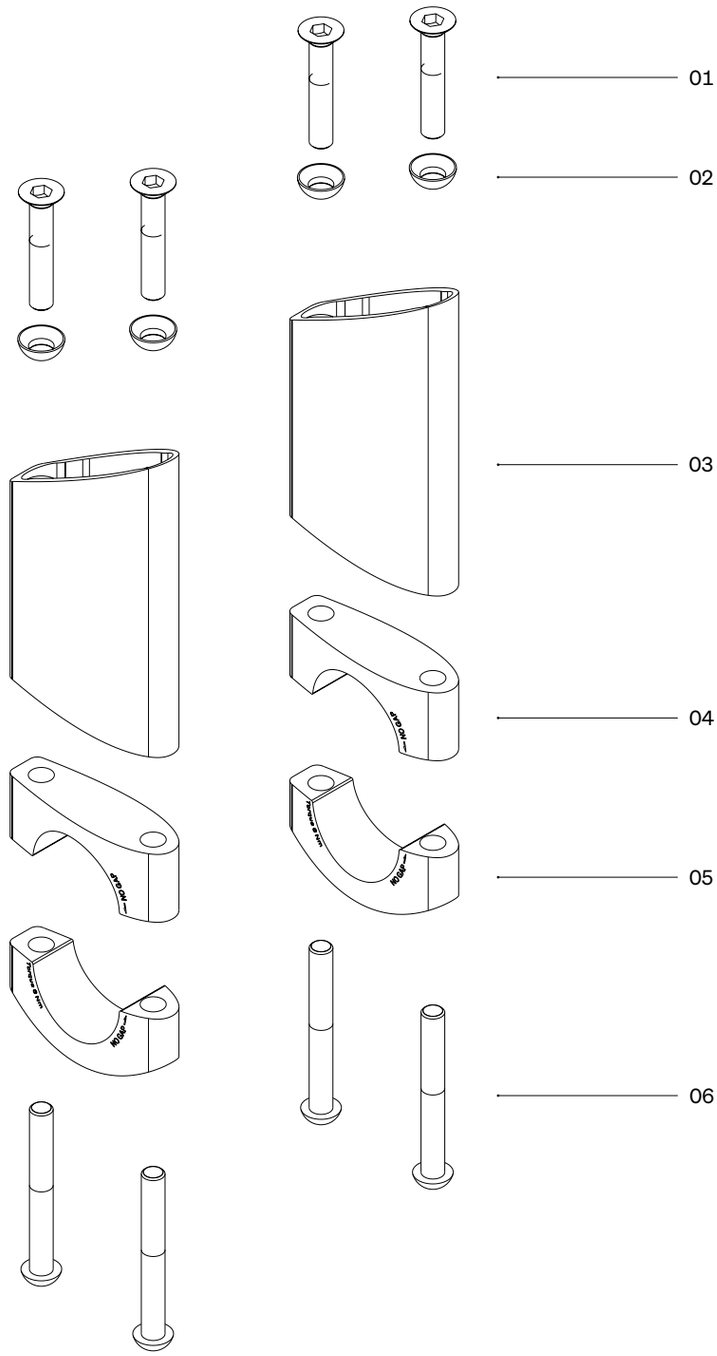

↓ Art	↓ Deda Part Code	↓ Description	↓ Material	↓ Finish	↓ EAN13 Code
01	M6X35S-T	M6X35 Screw, countersunk head, steel, black, w/threadlock	Steel	Black	8055774369121
02	SP15	Convex washer for M5 & M6 screws, black	Steel	Black	8052783483060
03	TT-SPACER-060	TT mono spacer 60 mm/30° (1 set = 2 pcs), aluminum, black anodized	Aluminium	Black	8055774369015
04	TT-UC	TT upper clamp, Ø 31.7 mm, aluminium, black	Aluminium	Black	8055774369008
05	TT-LC	TT lower clamp, Ø 31.7 mm, aluminium, black	Aluminium	Black	8055774368995
06	M6X50S-B	M6X50 Screw, button head, steel, black, w/threadlock	Steel	Black	8055774368988

Fast Pro
Ricambi/Spare Parts

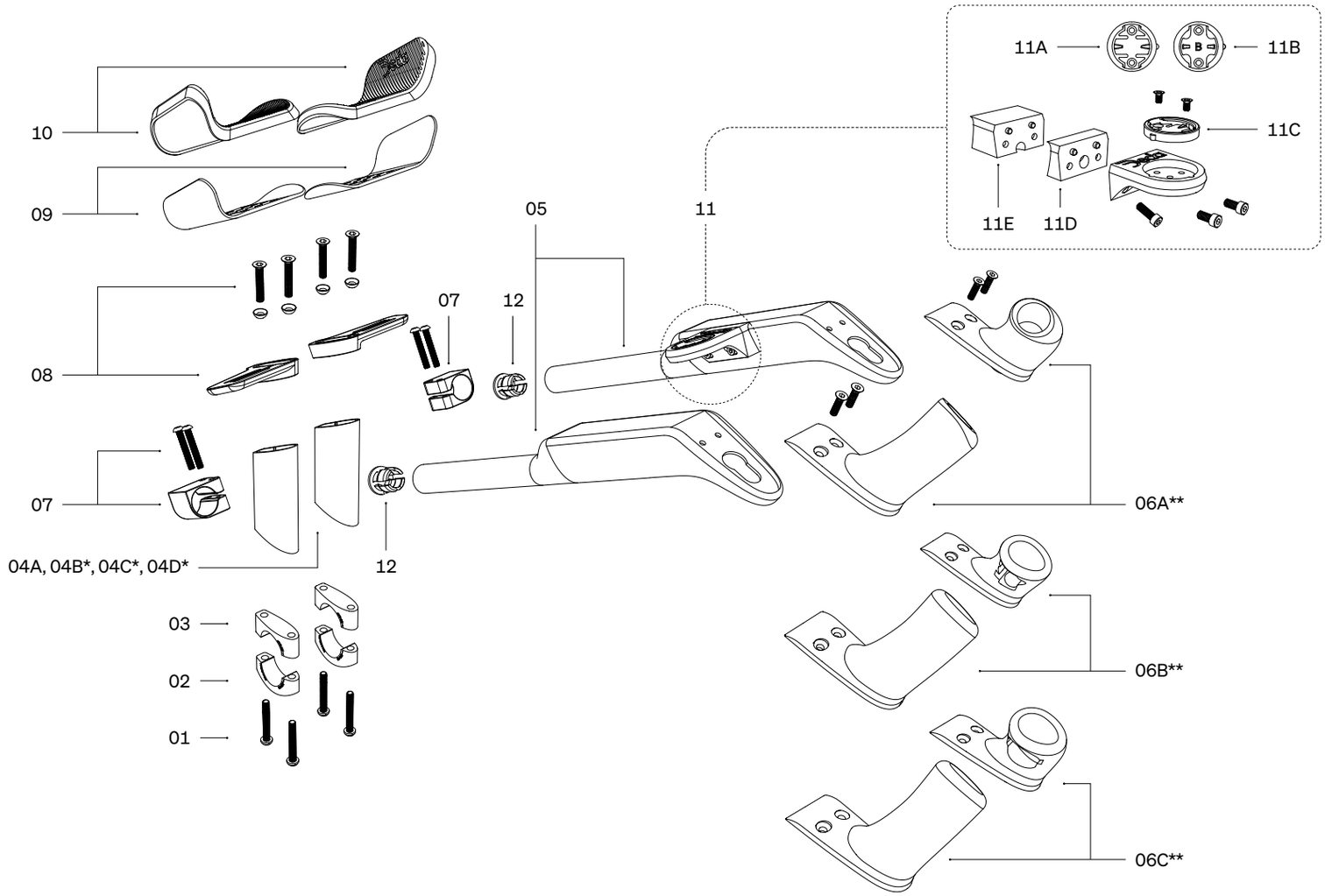

↓ Art	↓ Deda Part Code	↓ Description	↓ Material	↓ Finish	↓ EAN13 Code
01	M6X50S-B	M6X50 Screw, button head, steel, black, w/threadlock	Steel	Black	8055774368988
02	TT-LC	TT lower clamp, Ø31.7mm, aluminium, black	Aluminium	Black	8055774368995
03	TT-UC	TT upper clamp, Ø31.7mm, aluminium, black	Aluminium	Black	8055774369008
04A	TT-SPACER-060	TT mono spacer 60mm/30° (1 set = 2 pcs), aluminium, black anodized	Aluminium	Black	8055774369015
04B (*)	TT-SPACER-080	TT mono spacer 80mm/30° (1 set = 2 pcs), aluminium, black anodized	Aluminium	Black	8055774369022
04C (*)	TT-SPACER-100	TT mono spacer 100mm/30° (1 set = 2 pcs), aluminium, black anodized	Aluminium	Black	8055774369039
04D (*)	TT-SPACER-120	TT mono spacer 1200mm/30° (1 set = 2 pcs), aluminium, black anodized	Aluminium	Black	8055774369053
05	FPRO-EXT	Fast Pro carbon extensions, Ø22.2mm, POB finish, (1 set = 2 pcs)	Carbon	Black	8055774368865
06A (**)	FPRO-GRIP-KIT	Fast Pro grip kit (1 set = 2 pcs)	Nylon	Black	8055774369060
06B (**)	FPRO-GRIP-KIT1	FastPro grip kit, Shimano SW-R9150 satellite remote shifters (1 set = 2 pcs)	Nylon	Black	8055774369664
06C (**)	FPRO-GRIP-KIT2	FastPro grip kit, Sram EC-BLIP-B1 satellite remote shifters (1 set = 2 pcs)	Nylon	Black	8055774369671
07	CLAMP22	TT extensions clamp kit, Ø22.2mm, aluminium, black, 1 set (2 pcs) incl. screws	Aluminium	Black	8055774369077
08	TT-PLATEKIT	TT plate kit, aluminium, black anodized (Rev. 6)	Aluminium	Black	8055774369091
09	TT-ARMRESTKIT	TT armrest kit, aluminium, black, 1 set (2 pcs)	Aluminium	Black	8055774369138
10	TT-PADKIT	TT pad kit, foam, black, 1 set (2 pcs)	Foam	Black	8055774369145
11	TT-MOUNTKIT	TT computer mount, nylon, for Garmin, Wahoo & Bryton	Nylon	Black	8055774369152
11A	INSERTMOUNT2	Garmin/Wahoo Insert for computer mount (2 screws)	Nylon	Black	8055774360036
11B	INSERTMOUNT3	Bryton Insert for computer & seatpost mount (2 screws)	Nylon	Black	8055774364294
11C	M-TT-MOUNT	TT computer mount, nylon, black	Nylon	Black	8055774369169
11D	TT-MOUNT-S15	TT computer mount spacer, 15mm, nylon, black	Nylon	Black	8055774369176
11E	TT-MOUNT-S30	TT computer mount spacer, 30mm, nylon, black	Nylon	Black	8055774369183
12	PLUG5	Plug End Cap for FastPro extensions (1 pc)	Nylon	Black	8055774369190

(*) Non incluso con le estensioni; disponibile separatamente / Not included with the extensions; available as accessory

(**) Inclusi rispettivamente nelle versioni per comandi remoti standard (6A), Shimano Satellite (6B), Sram Blips (6C).
Included respectively in the versions for standard remote shifters (6A), Shimano Satellite (6B), Sram Blips (6C).

Parabolica Pro
Ricambi/Spare Parts

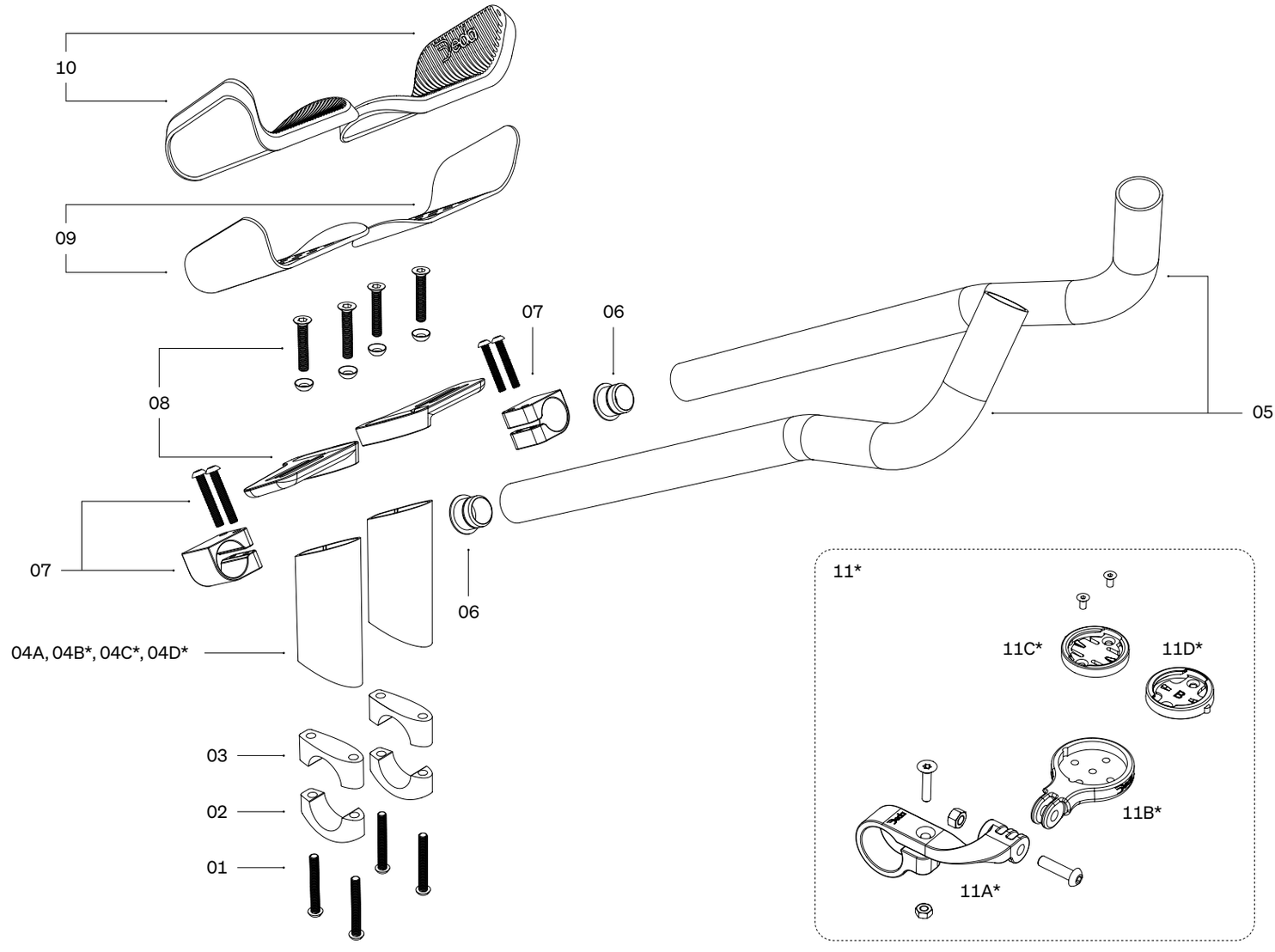

↓ Art	↓ Deda Part Code	↓ Description	↓ Material	↓ Finish	↓ EAN13 Code
01	M6X50S-B	M6X50 Screw, button head, steel, black, w/threadlock	Steel	Black	8055774368988
02	TT-LC	TT lower clamp, Ø31.7mm, aluminium, black	Alloy	Black	8055774368995
03	TT-UC	TT upper clamp, Ø31.7mm, aluminium, black	Alloy	Black	8055774369008
04A	TT-SPACER-060	TT mono spacer 60mm/30° (1 set = 2 pcs), aluminium, black anodized	Alloy	Black	8055774369015
04B (*)	TT-SPACER-080	TT mono spacer 80mm/30° (1 set = 2 pcs), aluminium, black anodized	Alloy	Black	8055774369022
04C (*)	TT-SPACER-100	TT mono spacer 100mm/30° (1 set = 2 pcs), aluminium, black anodized	Alloy	Black	8055774369039
04D (*)	TT-SPACER-120	TT mono spacer 1200mm/30° (1 set = 2 pcs), aluminium, black anodized	Alloy	Black	8055774369053
05	PARAPRO-EXT	Para Pro extensions only, Ø24mm, aluminium, black (1 set)	Alloy	Black	8055774369213
06	PLUG3	Plug End Cap for TT extensions Parabolica, Parabolica Pro & Cronoevo (1 pc)	Nylon	Black	8059265682041
07	CLAMP24	Extensions clamp kit, Ø24mm, aluminium, black, 1 set (2 pcs) incl. M6X35 screws	Alloy	Black	8055774369220
08	TT-PLATEKIT	TT plate kit, aluminium, black anodized	Alloy	Black	8055774369091
09	TT-ARMRESTKIT	TT armrest kit, aluminium, black, 1 set (2 pcs)	Alloy	Black	8055774369138
10	TT-PADKIT	TT pad kit, foam, black, 1 set (2 pcs)	Lycra-Foam	Black	8055774369145
11*	PARAMOUNTKIT	PARAMOUNTKIT, mount kit for Ø24mm extensions, for Garmin, Wahoo & Bryton	Nylon + GF	Black	8059493280583
11A*	M-PARAMOUNT	Computer bracket for Ø24mm extensions	Nylon + GF	Black	8059493280590
11B*	SP21	Staffa seatpost mount for Garmin & Bryton	Nylon + GF	Black	8055774364287
11C*	INSERTMOUNT2	Garmin/Wahoo Insert for Computer Mount (2 screws)	Nylon	Black	8055774360036
11D*	INSERTMOUNT3	Bryton Insert for Computer & Seapost Mount (2 screws)	Nylon	Black	8055774364294

(*) Non incluso con le estensioni; disponibile separatamente / Not included with the extensions; available as accessory

Cronoevo, Parabolica, Fastblack2, Superzero TT
Ricambi/Spare Parts

Cronoevo **Parabolica** **Fastblack2**

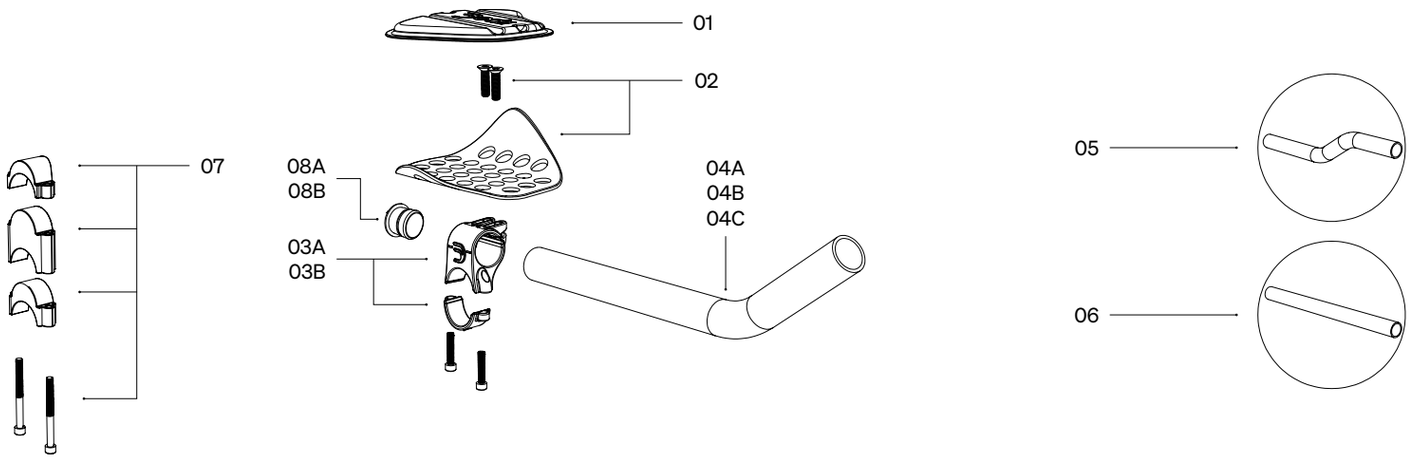

↓ Art	↓ Deda Part Code	↓ Description	↓ Material	↓ Finish	↓ EAN13 Code
01	PAD31	PARABOLICA / FASTBLACK2 ARMREST PAD, Foam and Lycra (1 pair)	Foam + Lycra	Black	8051406526566
02	ARMRESTPLATE	PARABOLICA / FASTBLACK2 ARMREST PLATE, Alloy 6061, including Screws (1 pair)	Alloy + Steel	Black	8059265680450
03A	CLAMP2007	PARABOLICA / FASTBLACK2 CLAMP for 31.7 mm h/bar (1 pair)	Alloy	Black	8059265680467
03B	CLAMP35	PARABOLICA / FASTBLACK2 CLAMP for 35.0 mm h/bar (1 pair)	Alloy	Black	8051406527839
04A	K04N	FASTBLACK2 Extensions, J-bend, Ø24mm, 370mm x 23°, carbon UD (1 set)	Carbon UD	Black	8059265689439
04B	P1EXT	PARABOLICA 1 Extensions, J-bend, Ø24mm, 300mm x 38°, AL6061 (1 set)	Alloy	Black	8059265684205
04C	PARA1EVO	CRONOEVO Extensions, J-bend, Ø 24mm, 370 mm x 50°, AL6061 (1 set)	Alloy	Black	8052783485408
05	P2EXT	PARABOLICA 2 Extensions, S-bend, Ø24mm, 300mm, 42mm rise, AL6061 (1 set)	Alloy	Black	8059265684212
06	P0EXT	PARABOLICA 0 Extensions, Straight bend, Ø24mm, 310 mm, AL6061 (1 set)	Alloy	Black	8059265684199
07	PARARISERKIT	PARABOLICA/FASTBLACK2 RISER SPACERS KIT, Nylon,1 set, w/bolts	Nylon	Black	8059265688548
08A	PLUG2	TT EXTENSIONS REAR PLUG END-CAP / TAPPO, for Espresso, Kronos, Fastblack2 (1 pc)	TPU	Black	8059265681365
08B	PLUG3	TT EXTENSIONS REAR PLUG END-CAP / TAPPO, for Parabolica & Cronoevo (1 pc)	TPU	Black	8059265682041

Superzero TT

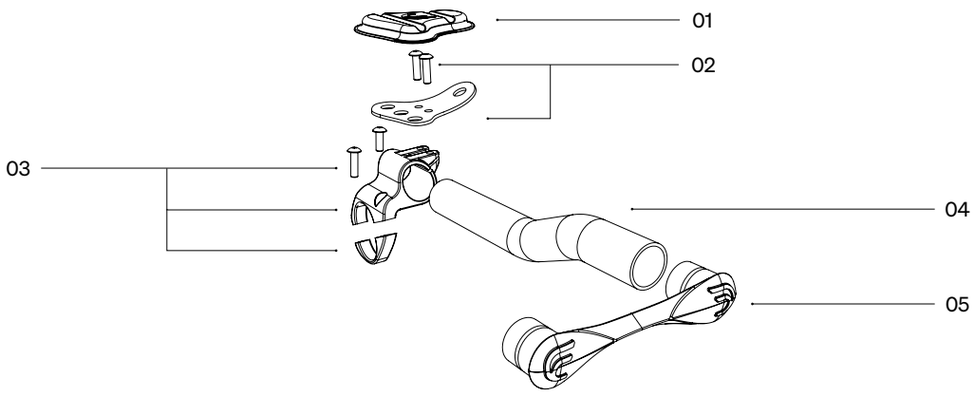

↓ Art	↓ Deda Part Code	↓ Description	↓ Material	↓ Finish	↓ EAN13 Code
01	CBPADN	CARBON / METAL BLAST ARMREST PAD, LYCRA+FOAM	Lycra + Foam	Black	8059265686285
02	MBPLATESZ	SUPERZERO TT CLIP-ON ARMREST PLATE, Aluminum 6061, including Screws (1 pair)	Alloy	Black	8052783482445
03	CLAMPSZ	Superzero TT clamp system, for Ø 31.7 mm handlebar	Alloy	Black	8052783482438
04	PARA2SZ	SUPERZERO TT CLIP-ON Extensions Only, 200 mm, Black Anodized, Alloy 6061, 1 set	Alloy	Black	8052783482414
05	BBLAST	BRIDGE for Carbon Blast / Metal Blast / Superzero TT	Nylon	Black	8051406525453

Carbon Blast & Metal Blast
Ricambi/Spare Parts

Carbon Blast

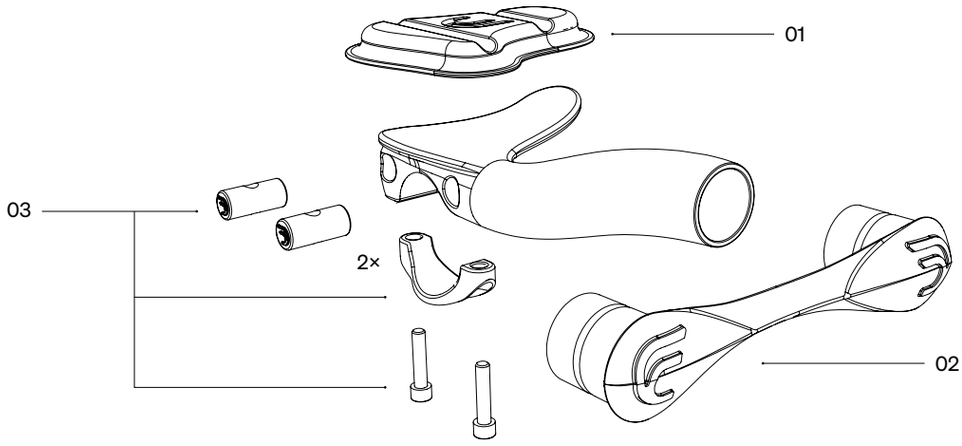

↓ Art	↓ Deda Part Code	↓ Description	↓ Material	↓ Finish	↓ EAN13 Code
01	CBPADN	CARBON / METAL BLAST ARMREST PAD, LYCRA+FOAM	Lycra + Foam	Black	8059265686285
02	BBLAST	BRIDGE for Carbon Blast / Metal Blast	Nylon	Black	8051406525453
03	CLAMPBLAST	CARBON BLAST Clamp System including Pins and Screws (1 kit)	Alloy + Steel	Black	8059265684298

Metal Blast

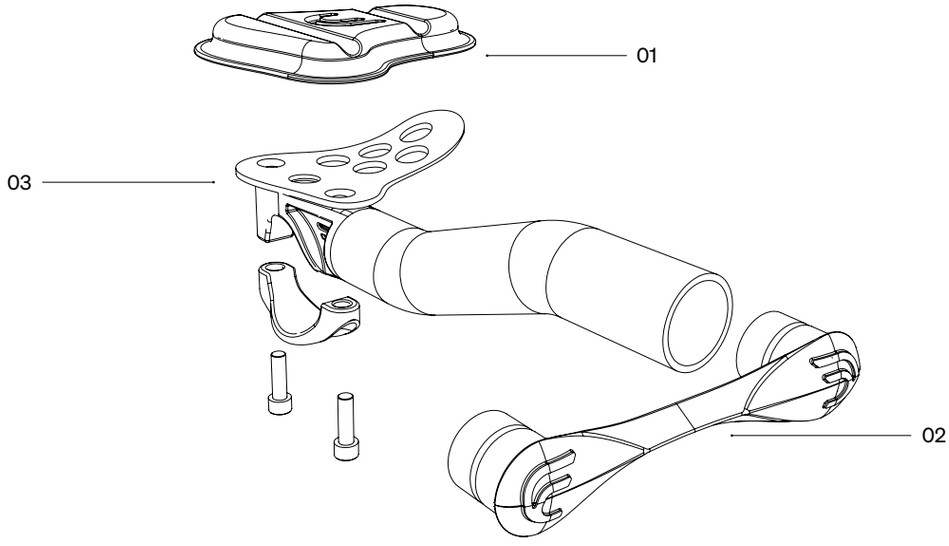

↓ Art	↓ Deda Part Code	↓ Description	↓ Material	↓ Finish	↓ EAN13 Code
01	CBPADN	CARBON / METAL BLAST ARMREST PAD, LYCRA+FOAM	Lycra + Foam	Black	8059265686285
02	BBLAST	BRIDGE for Carbon Blast / Metal Blast	Nylon	Black	8051406525453
03	MBPLATE	Metal Blast armrest, aluminium 6061, includes bolts, 1 set = 2 pcs	Alloy	Black	8052783482452

EDG Road, Allroad, Gera Curvy & Gera EDG
Ricambi/Spare Parts

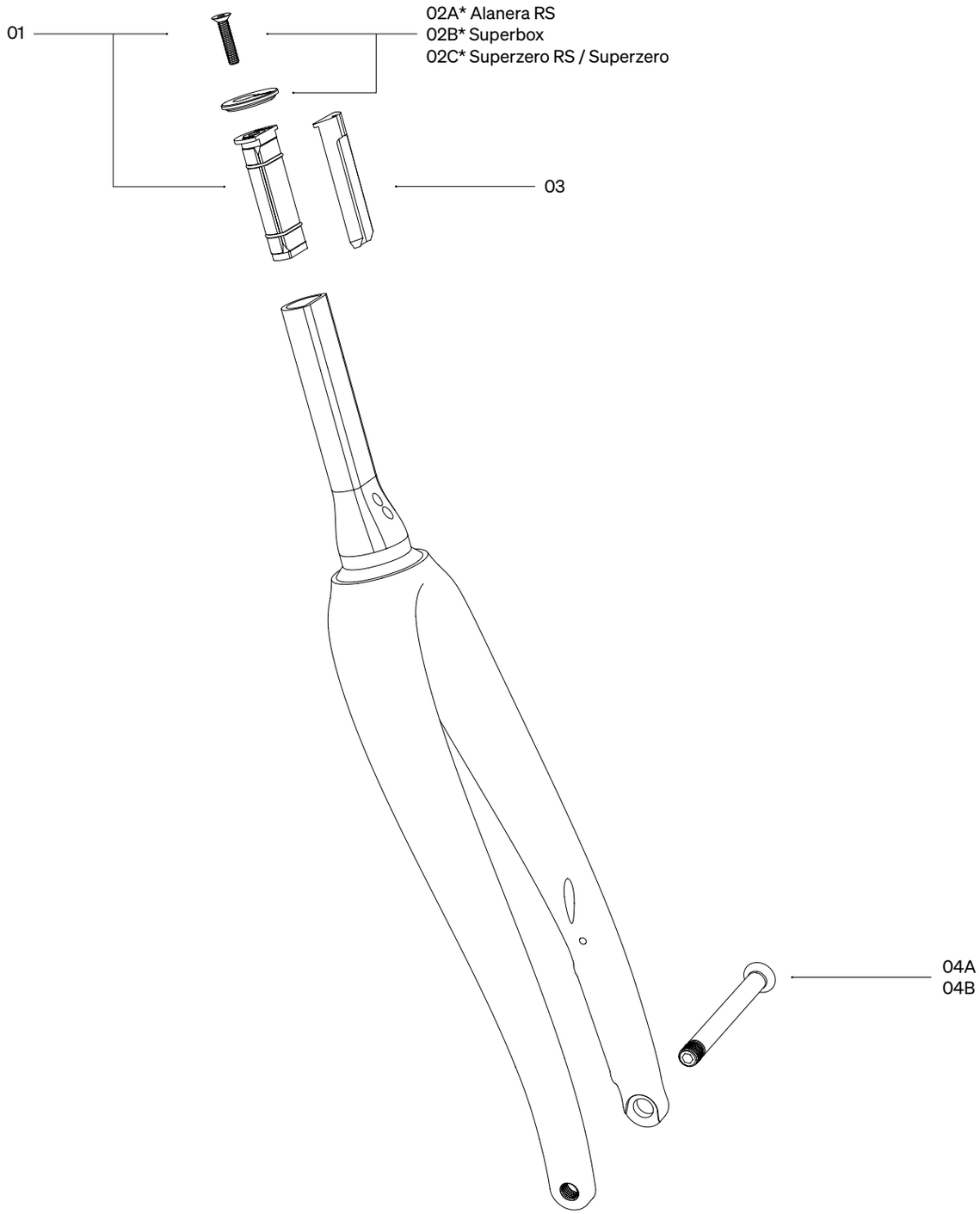

↓ Art	↓ Deda Part Code	↓ Description	↓ Material	↓ Finish	↓ EAN13 Code
01	EXP-DX	EXPANDER for D-SHAPE fork, 70 mm length, with top cap and D-shape spacer	Aluminum	Black / Silver	8055774363877
02A*	HDRS-TP-DX	ALANERA RS topcap for D-SHAPE fork steerer	Aluminum	Black	8055774365956
02B*	HDSBXTP-4DX	SUPERBOX TOPCAP for D-SHAPE fork steerer, 1 1/8" headset, alloy bolt M6×20 mm	Aluminum	Black	8052783489703
02C*	HDSZTPX-DX	SUPERZERO TOPCAP for D-SHAPE fork steerer, 1 1/8" headset, alloy bolt M6×20 mm	Aluminum	Black	8052783485477
03	HDDDSS70	D-SHAPE fork spacer/spessore, 70 mm aluminum, black	Aluminum	Black	8055774366885
04A	PP12012	THRU AXLE front flat head M12 × P1.5 × 120	Aluminum	Black	8055774363884
04B	PP12012-AR	THRU AXLE front tapered head M12 × P1.5 × 120	Aluminum	Black	8055774361040

(*) Non incluso con la forcella; disponibile come accessorio / Not included with the fork; available as accessory

Staffa
Ricambi/Spare Parts

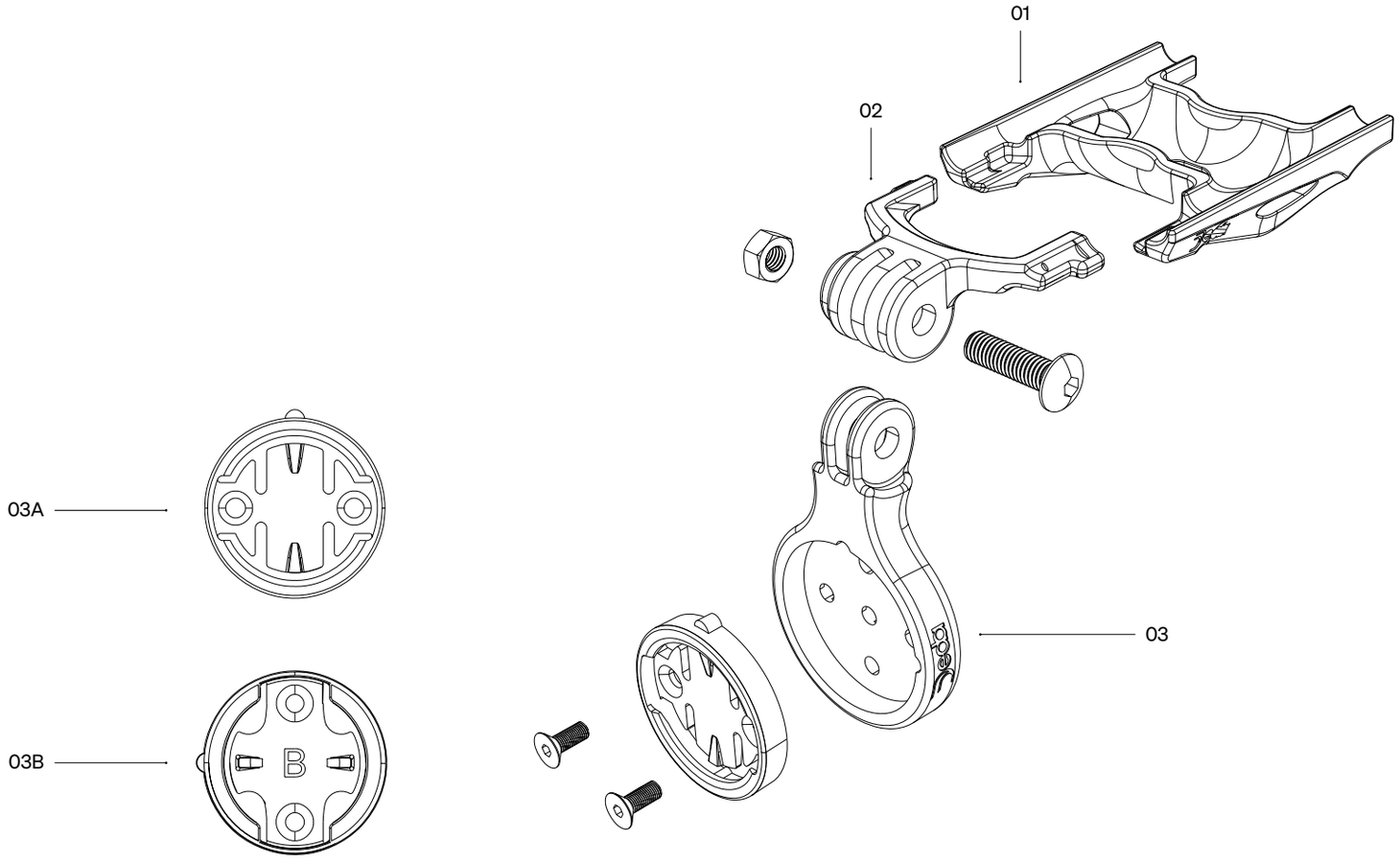

↓ Art	↓ Deda Part Code	↓ Description	↓ Material	↓ Finish	↓ EAN13 Code
01	SP19	Staffa seatpost lower plate, alloy 6061, black	Alloy 6061	Black	8055774364263
02	SP20	Staffa seatpost GoPro mount, black	Nylon + GF	Black	8055774364270
03	SP21	Staffa seatpost mount for Garmin & Bryton	Nylon + GF	Black	8055774364287
03A	INSERTMOUNT2	Garmin/Wahoo Insert for Computer Mount (2 screws)	Nylon	Black	8055774360036
04B	INSERTMOUNT3	Bryton Insert for Computer & Seapost Mount (2 screws)	Nylon	Black	8055774364294

Informazioni tecniche Manubri & Attacchi
Handlebars & Stems Technical Information

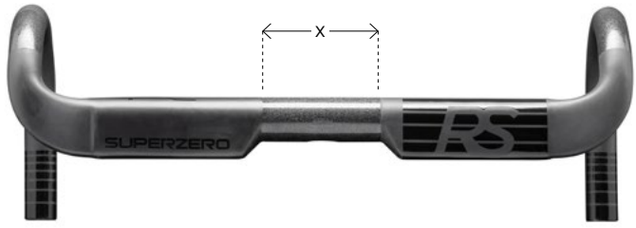

Attacchi Stems

↓ Products	↓ Larghezza frontalino (mm) Faceplate width (mm)
Vinci	57
Superzero RS	43
Superleggero RS	27,2 mm (Front) & 38 mm (Rear)
Superbox	44,5
Zero100	37,5
Zero2	asymmetric 38/43,5
Zero1	40
Zero	41

Manubri Handlebars

↓ Products	↓ Size	↓ Larghezza dell'area centrale da Ø 31.7 mm Clamping area width with Ø 31.7 mm
Vinci	All sizes	85
Superzero RS Carbon	All sizes	83
Superzero RS Alloy	All sizes	80 (36 size) - 100 (38, 40, 42, 44 sizes)
Superleggero RS	All sizes	110
Superzero Alloy	All sizes	60
Superzero Gravel Carbon	All sizes	83
Superzero Gravel Alloy	All sizes	100
Gera Carbon	All sizes	80
Gera Alloy	All sizes	90
Gravel 100	40	80
	42	100
	44	120
	46	140
Zero100	38	60
	40	60
	42	90
	44	110
	46	130
Zero2 DCR	All sizes	100
Zero2	40	80
	42	100
	44	120
	46	140
Zero1	38	100
	40	110
	42	120
	44	120
	46	120
Zero	42	100
	44	120
	46	120

Ruote Tubeless. Compatibilità pneumatico
Tubeless Wheels. Tire compatibility

Importante • I cerchi Deda consentono il gonfiaggio ad una pressione massima di 7 bar. Controlla sempre la pressione massima indicata sul copertone dal produttore, in quanto potrebbe differire da quella dei cerchi.

Important • Deda rims support a maximum inflation pressure of 7 bar. Always refer to the maximum pressure specified by the tire manufacturer, as it may differ from the rim's limit.

Larghezza Pneumatico Tire Width		**Larghezza interna cerchio** Rim Inner Width						
		ROAD					**GRAVEL**	
		19C		**21C**	**23C**		**23C**	
inch	**mm**	**↓ RS4**	**↓ RS3**	**↓ HERO RS**	**↓ SL7**	**↓ SL5**	**↓ GERA Carbon**	**↓ GERA Alloy**
0,90	23	-	-	-	-	-	-	-
0,94	24	●	●	-	-	-	-	-
1,00	25	●	●	-	-	-	-	-
1,06	27	●	●	-	-	-	-	-
1,10	28	●	●	●	●	●	●	●
1,20	30	●	●	●	●	●	●	●
1,30	32	●	●	●	●	●	●	●
1,35	34	●	●	●	●	●	●	●
1,40	36	●	●	●	●	●	●	●
1,50	38	●	●	●	●	●	●	●
1,55	40	●	●	●	●	●	●	●
1,65	42	●	●	●	●	●	●	●
1,75	44	●	●	●	●	●	●	●
1,80	46	●	●	●	●	●	●	●
1,90	48	●	●	●	●	●	●	●
1,95	50	●	●	●	●	●	●	●
2,25	57	●	●	●	●	●	●	●
2,56	65	-	-	●	●	●	●	●
2,80	71	-	-	-	-	-	-	-

Standert

Dedaindustrie Srl
Via Leonardo Da Vinci, 19/21/23
26010 Campagnola Cremasca (CR) – IT
Tel. (+39) 0373 750129
info@dedaelementi.com
dedaelementi.com

#ridededa

Deda OS
No.8, Lane 150-30, Sec. 3,
Xitun Rd., Xitun Dist.
Taichung City 407, Taiwan (R.O.C.)
Tel: +886-4-24623436
Fax: +886-4-24623430
dedaos.com.tw

Il marchio e i loghi Deda Elementi e Deda sono marchi registrati da Dedaindustrie S.r.l.
Deda Elementi and Deda logo and brand are registered trademarks of Dedaindustrie S.r.l.

Edizione stampata. 09.2025
Print edition. 09.2025

IT • Le informazioni e le immagini contenute in questo catalogo sono valide al momento della stampa. Dedaindustrie Srl si riserva la facoltà di modificare il contenuto e l'aspetto dei prodotti contenuti in questo catalogo. Il marchio e il logo Deda sono proprietà della Dedaindustrie Srl, ogni uso non autorizzato sarà perseguibile a termine di legge. I pesi indicati all'interno del catalogo sono riferiti al campione più leggero e possono variare in funzione delle tolleranze dimensionali fino a un max di +/- 4%.

EN • The information and pictures contained in this catalogue are valid at time of printing. Dedaindustrie Srl reserves the right to modify the content and appearance of products in the catalogue. Deda logo and products are owned by Dedaindustrie Srl, any unauthorized use thereof is punishable by law. The weights in the catalogue refer to the lighter production sample and may vary in function of the dimensional tolerances up to a max.

Art direction e progetto grafico
Art direction and graphic design

→ Poliedro Studio

Crediti fotografici
Photo credits

Manuel Gatto (Cover • 27-45 • 58-66), Van Rysel, Sam Andrews, Maurizio Borserini, Chiara Redaschi, Uno-X Mobility, Titici, Federico Vandone, Laboral Kutxa, Euskaltel Euskadi, Tornanti CC, Pushbikers Team, Sebastian Roth, Standert Bicycles, Cycling Media Agency, Crelan Corendon, Team Novo Nordisk,Simone Mescolini, Gusoline, Paolo Penni Martelli.

Post Production
Post Production

→ A. De Pedrini

IT • Un ringraziamento speciale al nostro staff, distributori, negozi e amici per mettere così tanto entusiasmo e passione nel promuovere Deda in tutto il mondo.

EN • Special thanks to our staff, distributors, dealers and friends for putting so much enthusiasm and passion in promoting Deda brand all around the world.

[redacted]

Cycling has many facets: let’s celebrate together
the sport we love more than any other.

VERKAUFS- UND LIEFERBEDINGUNGEN | *CONDITIONS GÉNÉRALES D'AFFAIRES*

VERKAUFS- UND LIEFERBEDINGUNGEN Jeder Kunde der CUAG Sports AG anerkennt mit seiner Bestellung die nachstehenden Verkaufs- und Lieferbedingungen, welche wir uns vorbehalten, bei Bedarf ohne Ankündigung zu ändern.

VERSAND Lieferfrist: DPD 24 Std.-Service; Lieferung am nächsten Werktag bei Bestelleingang bis 14:00 Uhr.
Administrations-, Porto- und Frachtspesen für Sendungen werden verrechnet.
Versandkosten pro Paket: CHF 12,40, ab CHF 300.– Bestellwert frei Haus,
Expressversand CHF 12,40 + CHF 25.– zusätzlich.

REKLAMATIONEN Beanstandungen sind innert 7 Tagen nach Erhalt der Ware zu melden.

RETOUREN werden nur nach vorheriger Vereinbarung zurückgenommen und gutgeschrieben, wenn die Rücksendung innerhalb von 7 Tagen mit einer Kopie der Rechnung erfolgt. Wir behalten uns vor, verspätet eintreffende Ware nicht zum vollen Warenwert gutzuschreiben. Rücksendungen werden ausschliesslichen in der Originalverpackung und mit sämtlichen Hersteller-Etiketten angenommen. Ansonsten werden 10% des Einkaufpreises als Bearbeitungs- und Instandhaltungsgebüren berechnet. Für das Retournieren von **Auswahlartikeln**, **die eigens ab Lager Italien geliefert wurden** (im Webshop gelber Ampel markiert), wird 10% des Einkaufspreises als Bearbeitungsgebür verrechnet.

GARANTIELEISTUNG Herstellergarantien bleiben vorbehalten, binden aber CUAG Sports AG nicht. Die CUAG Sports AG wirkt bei der Regelung von Herstellergarantiefällen administrativ mit, übernimmt aber selber keinerlei Haftung aufgrund einer Herstellergarantie. Die Garantie wird nur für die Behebung von Material- oder Funktionsmängeln der Kaufsache gewährt (nur durch Reparatur oder Ersatz der mangelhaften Kaufsache). Im Übrigen ist jede Garantiehaftung der CUAG Sports AG ausgeschlossen. Die Garantie wird mit der Lieferung des Artikels gültig und durch die Rechnung rechtskräftig. Garantieleistung kann nur bei Vorlegen eines schriftlichen Belegs über das Kaufdatum erbracht werden.

ZAHLUNGSBEDINGUNGEN
1. 20 Tage rein netto (wir arbeiten mit dem automatischen Verbuchungssystem BESR)
2. Ab 45 Tagen 8 % Verzugszins zzgl. CHF 20.– Bearbeitungsgebühren pro Monat
3. Unberechtigte Abzüge werden nachbelastet
4. Ein Rabatt von 2 % wird bei Voraus- und Barzahlung sowie bei Lastschriftverfahren gewährt.

LIEFERFRISTEN Die von uns genannten Lieferfristen sind unverbindlich. Fälle höherer Gewalt, innere Betriebsstörungen oder Zahlungsschwierigkeiten des Bestellers entbinden uns von jeglicher Lieferpflicht.

EIGENTUMSVORBEHALT Die von uns gelieferte Ware bleibt bis zur völligen Bezahlung des Kaufpreises einschliesslich aller Nebenforderungen unser Eigentum. Die Verrechnung mit Gegenforderungen ist unzulässig.

ERFÜLLUNGSORT Erfüllungsort für Lieferungen und Zahlungen ist 6405 Immensee.

CONDITIONS DE VENTE ET DE LIVRAISON Au moment d'effectuer sa commande, chaque client de l'entreprise CUAG Sports AG accepte les conditions de vente et de livraison ci-dessous. Nous nous réservons le droit de les modifier sans avis préalable an cas de besoin.

EXPÉDITION Délai de livraison : service DPD 24 heures, livraison le jour ouvrable suivant pour les commandes effectuées jusqu'à 14h00.
Les frais d'administration, de port et les frais pour les envois seront facturés.
Frais de port: CHF 12.40, franco domicile pour une commande à partir de CHF 300.–.
Livraison express CHF 12.40 + CHF 25.– supplémentaire.

RÉCLAMATIONS Les réclamations doivent être annoncées dans les 7 jours suivant la réception de la marchandise.

RETOURS Les marchandises ne seront reprises et créditées qu'après un accord préalable, que si le retour est effectué dans les 7 jours et qu'il est accompagné d'une copie de la facture. Nous nous réservons le droit de ne pas créditer la valeur intégrale. Les retours ne sont acceptés que dans l'emballage d'origine et avec toutes les étiquettes du fabricant. Sinon, 10 % du prix d'achat seront facturés comme frais de manutention et de maintenance. Pour le retour **d'articles de choix commandés en Italie** (jaune au B2B), 10% du prix d'achat sera facturés comme frais de traitement.

GARANTIE La garantie s'applique exclusivement pour la réparation des défauts de matériels ou de fonctionnements de la chose vendue (uniquement pour la réparation ou le remplacement de la chose vendue défectueuse). Pour le reste, la responsabilité de garantie de CUAG Sports AG est exclue. Sous réserve des garanties de fabricants, n'engageant toutefois pas CUAG Sports AG. CUAG Sports AG participe au règlement de la partie administrative des cas de garanties de la part des fabricants, mais ne porte pas de responsabilité en relation à la garantie d'un fabricant. Elle commence à partir de la livraison de l'article et elle est valable sur la base de la facture. La garantie ne peut être appliquée que sur présentation d'une pièce justificative écrite avec la date d'achat.

CONDITIONS DE PAIEMENT
1. 20 jours net (nous travaillons avec le système de facturation automatique BVRB)
2. À partir de 45 jours, 8 % d'intérêt de retard ainsi que CHF 20.– de frais de dossier par mois en sus
3. Les déductions non justifiées seront facturées ultérieurement
4. Un rabais de 2 % sera accordé pour les paiements effectués en avance et en liquide, ainsi que par le système de recouvrement direct.

DÉLAIS DE LIVRAISON Nos délais de livraison sont donnés sans engagement. Le cas de force majeure, de panne interne ou de difficultés de paiement de la part de l'acheteur nous libèrent de toutes obligation de livraison.

RÉSERVE DE PROPRIÉTÉ La marchandise livrée par nos soins reste en notre propriété jusqu'au paiement total du prix d'achat, y compris toutes les créances secondaires. La compensation avec créances en contrepartie n'est pas admise.

LIEU D'EXÉCUTION Le lieu d'exécution pour les livraisons et les paiements est 6405 Immensee.

CASTELLI
sportful
TIME
nimbl
TUNAP SPORTS
KCO
KASK
Deda
SILCA
cu:ag
SPORTS AG
CUAG SPORTS AG | C/O HOHLE GASSE | ARTHERSTR. 60 | 6405 IMMENSEE | +41412595100 | INFO@CUAGSPORTS.COM | CUAGSPORTS-SHOP.COM